RSF Elektronik

www.rsf.at

MSA 7x0, MSA 8x0
SEALED LINEAR ENCODERS

INCREMENTAL AND ABSOLUTE LINEAR AND ANGLE ENCODERS, PRECISION GRADUATIONS

RSF Elektronik is one of the world's leading companies in the field of electronic linear and angle encoders and it offers an extensive portfolio which includes almost all designs which are required by the market. The typical resolutions or measuring steps range from a few micrometers down to the nanometre range.

RSF Elektronik, corporate head quarters Tarsdorf, Austria

RSF Elektronik, manufacturing subsidiary Stříbro, Czech Republic

Another core element of the product range are high-precision and resistant graduations which are manufactured in thin-layer technology on glass or other carrier substrates. RSF Elektronik also develops customized cable devices for the widest range of sectors and areas of application, and these are manufactured by the Stříbro subsidiary. In order to safeguard the company's high quality standard, a comprehensive quality assurance and environmental management system – certified according to DIN EN ISO 9001 and DIN EN ISO 14001 – has been put in place. Thanks to the company's extensive distribution network, optimum customer service is guaranteed in practically all regions.

TABLE OF CONTENTS

GENERAL DESCRIPTION

Design and operation 04

TECHNICAL INFORMATION

Accuracy 06
Connection cables, shielding, connectors, pin assignments 07
Interfaces 08
Switch signal output 09

OVERVIEW

Overview, selection guide 10
Technical data 11

LINEAR ENCODERS, MODELS

MSA 770, MSA 870 12
MSA 710, MSA 810 13
MSA 720, MSA 820 14
MSA 730, MSA 830 15

DISTRIBUTION CONTACTS

Addresses 16

DESIGN AND OPERATION

Linear encoders from RSF Eletronik are all-purpose. They are suited for manual applications; yet they are also particularly suitable for closed loop drive devices.

Owing to their sealed design, the linear encoders of the **MSA 7** and **MSA 8** series are predestined for applications in **automation** and **production technology**. They are ideally suited for **metrology**, **printing** and **robotics**, especially in applications where protection for the scale and reading head is required.

MSA 7 and **MSA 8** represent a systematic advancement of tried-and-tested devices and feature improved design details. During development, RSF Elektronik paid particular attention to the optimization of the accuracy of these devices. We achieved this goal thanks to the perfect combination of several individual components. Furthermore, the components that are subject to more stress have been optimized to increase system accuracy over the longer term.

Measuring devices are made up of two components: the **extrusion** and **reading head**. Preferably, the extrusion is to be mounted on the moveable part of the linear axis, and the reading head to the fixed part (cable duct) of the linear axis.

The **extrusion** consists of a stable aluminum scale housing, fastening elements, a scale and sealing lips.

Drip caps at the scale housing and specially formed sealing lips prevent the intrusion of dust and liquids into the extrusion. The fiber-reinforced sealing lips are highly abrasion-resistant. High velocities are feasible due to the high degree of rigidity of the unit, coupled with the ideally formed blade area of the reading head.

The **scale** is fastened by dint of a flexible adhesive film in the scale housing, which compensates for the differing linear expansion between the glass or glass ceramics and the aluminum. Thus a **reproducible thermal behavior** is ensured (expansion or shortening of the scale to the scale housing in case of temperature changes). The scale can additionally be fixed in the scale housing in order to adjust the thermal zero point to each measuring requirement. Expansion differences between aluminum scale housing and machine slide are evened out by flexible fastening elements. The **high accuracy of the measuring scale** is the result of a sophisticated lithographic process. A consistently accurate reproduction of the original measuring scale forms the basis for the manufacture of the highly accurate scales in RSF Elektronik measuring devices.

Depending on the model, the **reading head** is available with a **fixed** or **detachable cable**. The **reading carriage** includes a reticle and optoelectronics for signal generation. Hall-sensors are integrated in the reading head, which generate switch signals for an additional position detection or enable a selection of reference marks. They are activated by magnets that can be optionally positioned in any way on the extrusion by the customer. The evaluation electronics are positioned in the **reading carriage**, generating the evaluation signals (e.g. 1 Vpp or TTL).

Thanks to the design of the reading carriage alignment deviations between extrusion and machine guide are evened out. It rolls by dint of high-precision roller bearings on the scale and is pressed down by magnets that affect the ferromagnetic tapes on the extrusion (**magnet guide**). By mounting within the tolerance there are no forces between reading head and extrusion that could stress guide parts of the linear axis. Moreover, the extrusion is not subjected to any bending strain.

In the measuring direction, the reading carriage is connected by a wear-free and maintenance-free **magnetic coupling**. A ferromagnetic ball rolling freely between two magnetic plates makes for a connection that is very stiff in the measuring direction, yet flexible in all other degrees of freedom, minimizing the reversal error. Thus any deviation (within the tolerance) will be evened out by the ideal mounting of the measurement device.

The combination of magnetic guide and magnetic coupling allows for generous mounting tolerances without any negative influence on accuracy. Hence substantial benefits are achieved in comparison to traditional technologies.

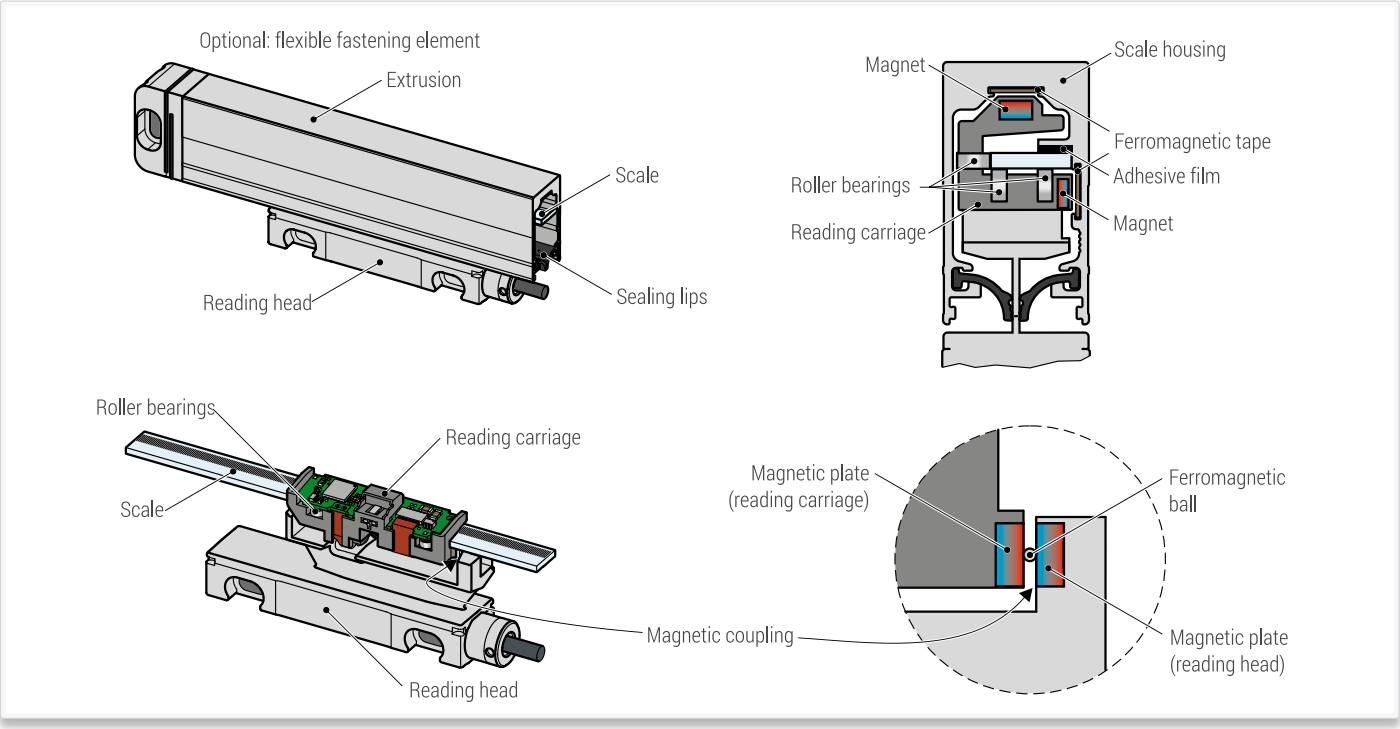

A high accuracy grating is deployed as scale graduation. Depending on the model, glass ($\alpha \approx 8{,}5 \times 10^{-6}$/K) or glass ceramics ($\alpha \approx 0 \times 10^{-6}$/K) is employed as base.

The grating is the consistent series of lines and spaces. The width of one line and one space is called a grating period (T).

Parallel to the grating, there are one or more reference marks on a second track. Within the measuring length, any position is possible and additional reference marks can be chosen at will in a distance of 50 mm.

Linear encoders can also be equipped with distance-coded reference marks. After traveling a distance of 20 mm at maximum, the absolute tool position is available with these models.By dint of the optical scanning, a position-accurate evaluation of the reference marks is ensured.

Scale unit

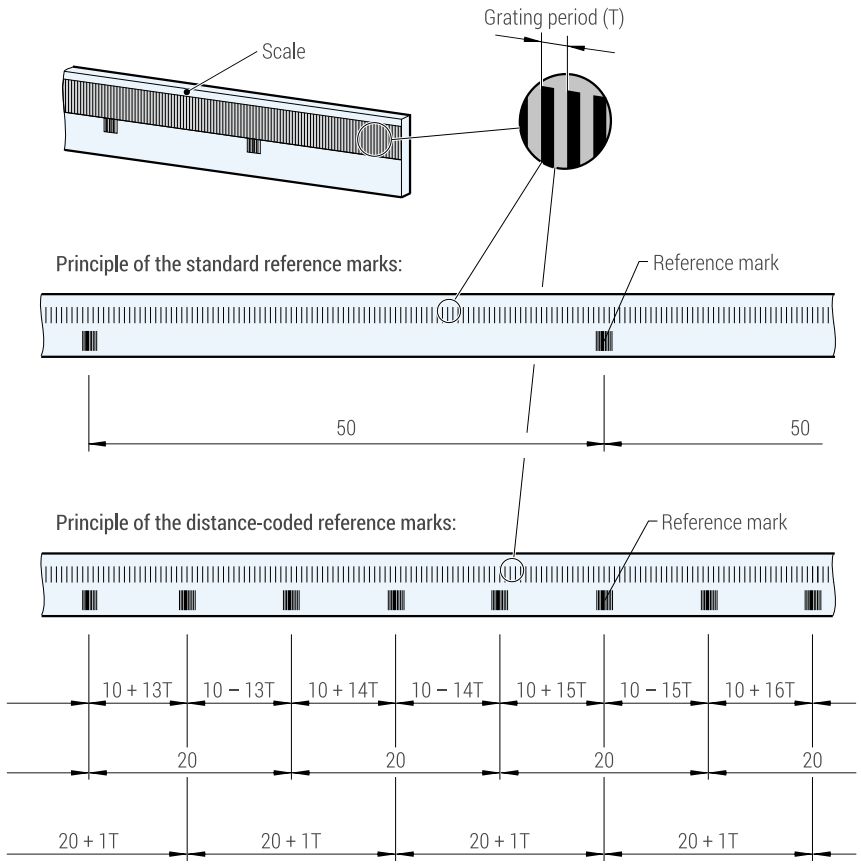

These incremental linear encoders work according to a photoelectric measuring principle with a transmissive **singlefield scanning**.

The regulated light of an infrared LED is collimated by a condenser lens, passes through the grid of the reticle and the scale and generates a periodic intensity distribution on the structured sensor.

The sensor generates sinusoidal signals of the highest quality that prove to be widely insensitive to possible contaminations, which can never be entirely ruled out despite all technical precautions.

The regulation of the LED ensures a constant signal amplitude, guaranteeing stability in the case of temperature fluctuations as well as with long-run operation.

Transmissive singlefield scanning

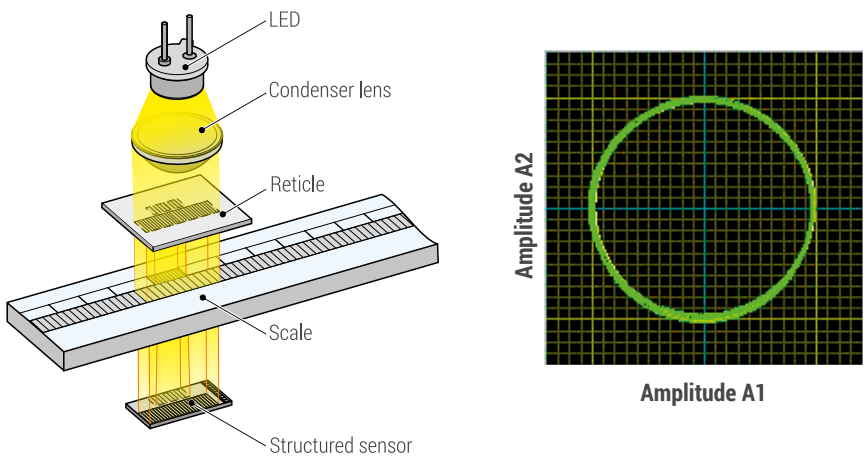

ACCURACY

The accuracy of the linear encoders is classified with a „± tolerance“ in µm/m (e.g. ±5 µm/m).

The accuracy refers to any meter within the measuring length.
For measuring lengths less than 1000 mm, the accuracy specification applies to the whole measuring length.

For best system accuracy, the encoder should be mounted near the measuring plane,
as parallel as possible to the machine guideway.

Example of a typical calibration chart for MSA 770 :

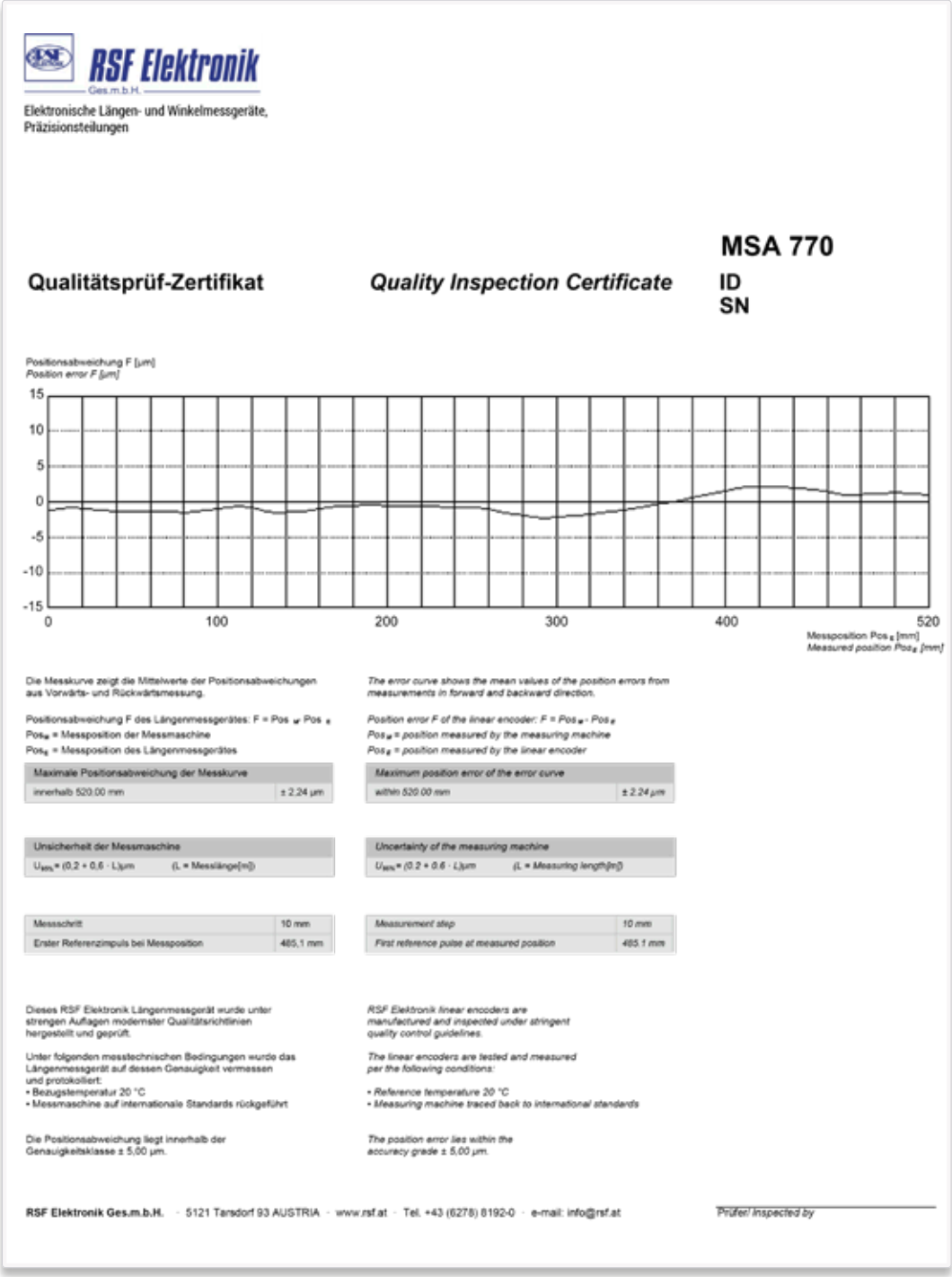

RSF Elektronik
Ges.m.b.H.
Elektronische Längen- und Winkelmessgeräte,
Präzisionsteilungen

MSA 770

Qualitätsprüf-Zertifikat | ***Quality Inspection Certificate***

ID
SN

Die Messkurve zeigt die Mittelwerte der Positionsabweichungen aus Vorwärts- und Rückwärtsmessung.

Positionsabweichung F des Längenmessgerätes: F = Pos $_M$ - Pos $_E$
Pos$_M$ = Messposition der Messmaschine
Pos$_E$ = Messposition des Längenmessgerätes

The error curve shows the mean values of the position errors from measurements in forward and backward direction.

Position error F of the linear encoder: F = Pos$_M$ - Pos$_E$
Pos$_M$ = position measured by the measuring machine
Pos$_E$ = position measured by the linear encoder

Maximale Positionsabweichung der Messkurve	
innerhalb 520.00 mm	± 2.24 µm

Maximum position error of the error curve	
within 520.00 mm	*± 2.24 µm*

Unsicherheit der Messmaschine	
$U_{95\%}$ = (0,2 + 0,6 · L)µm	(L = Messlänge[m])

Uncertainty of the measuring machine	
$U_{95\%}$ = (0.2 + 0.6 · L)µm	*(L = Measuring length[m])*

Messschritt	10 mm
Erster Referenzimpuls bei Messposition	485,1 mm

Measurement step	*10 mm*
First reference pulse at measured position	*485.1 mm*

Dieses RSF Elektronik Längenmessgerät wurde unter strengen Auflagen modernster Qualitätsrichtlinien hergestellt und geprüft.

Unter folgenden messtechnischen Bedingungen wurde das Längenmessgerät auf dessen Genauigkeit vermessen und protokolliert:
• Bezugstemperatur 20 °C
• Messmaschine auf internationale Standards rückgeführt

Die Positionsabweichung liegt innerhalb der Genauigkeitsklasse ± 5,00 µm.

RSF Elektronik linear encoders are manufactured and inspected under stringent quality control guidelines.

The linear encoders are tested and measured per the following conditions:

• Reference temperature 20 °C
• Measuring machine traced back to international standards

The position error lies within the accuracy grade ± 5,00 µm.

RSF Elektronik Ges.m.b.H. · 5121 Tarsdorf 93 AUSTRIA · www.rsf.at · Tel. +43 (6278) 8192-0 · e-mail: info@rsf.at

Prüfer/ Inspected by

CONNECTING CABLE, SHIELDING

Connecting cable MSA 7

Graduated cable lengths: 0.5 m, 1 m, 3 m (other lengths on request).

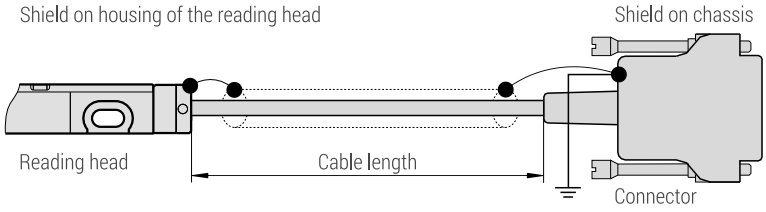

Shielded PUR-cable; Drag chain qualified.

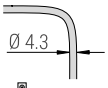

Bending radius fixed mounting

Bending radius continuous flexing

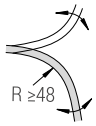

Detachable connecting cable MSA 8

Graduated cable lengths: 0.5 m, 1 m, 3 m (other lengths on request).

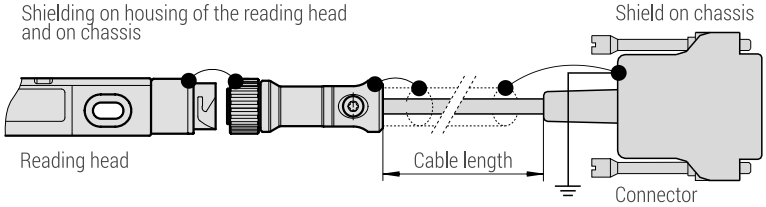

Shielded PUR-cable; Drag chain qualified.

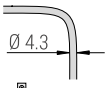

Bending radius fixed mounting

Bending radius continuous flexing

MALE CONNECTORS, PIN ASSIGNMENTS

D-sub connector, 15-pin

Dimensions
(Male, 15-pin, mass: 25 g)

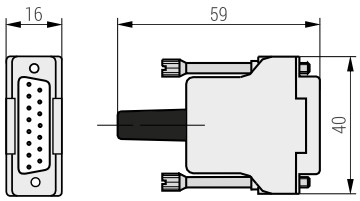

Pin assignment
View on pins

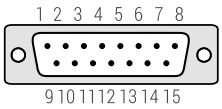

Pin	1	2	3	4	5	6	7	8	9	10	11	12	13	14	15
Sinusoidal voltage signals 1 Vpp	Occupied	0 V Sensor	Occupied	RI−	A2−	A1−	V+ Sensor	V+	0 V	S1*	S2*	RI+	A2+	A1+	nc
TTL-signals	Occupied	0 V Sensor	$\overline{US}$	$\overline{RI}$	$\overline{T2}$	$\overline{T1}$	V+ Sensor	V+	0 V	S1*	S2*	RI	T2	T1	nc

M12 connector, 12-pin

according to IEC 61076-2-101 LM012–Gxx-A

Dimensions
(Male, 12-pin, mass: ca. 15 g)

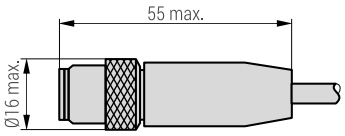

Pin assignment
View on pins

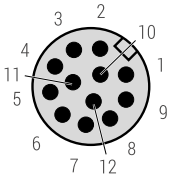

Pin	1	2	3	4	5	6	7	8	9	10	11	12
Sinusoidal voltage signals 1 Vpp	V+	A1−	A2+	A2−	S2*	Occupied	RI+	RI−	Occupied	A1+	S1*	0 V
TTL-signals	V+	$\overline{T1}$	T2	$\overline{T2}$	S2*	$\overline{US}$	RI	$\overline{RI}$	Occupied	T1	S1*	0 V

- Sensor: the sensor pins are bridged in the chassis with the particular power supply.
- * Version without switch signals (version K) = nc.
- Shield is connected with the chassis.
- Pins or wires marked “occupied” or “nc” must not be used by the customer.

INTERFACES

SINUSOIDAL VOLTAGE SIGNALS 1 VPP

(drawing shows "positive counting direction")
Two sinusoidal voltage signals A1 and A2 and one reference mark signal (all with inverted signals).

Power supply: +5 V ±10 %, max. 150 mA (unloaded)
Track signals (differential voltage A1+ to A1− resp. A2+ to A2−):
Signal amplitude 0.6 Vpp to 1.2 Vpp; typ. 1 Vpp
(with terminating impedance Zo = 120 Ω between A1+ to A1− resp. A2+ to A2−)

Reference mark (differential voltage RI+ to RI−):
Square-wave pulse with an amplitude of 0.5 to 0.9 V; typ. 0.7 V
(with terminating impedance Zo = 120 Ω between RI+ to RI−)

Advantage:
High traversing speed with long cable lengths possible.

Voltage signals (1 VPP)

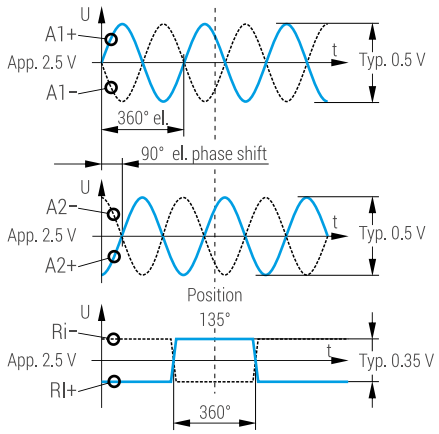

SQUARE-WAVE SIGNALS

(drawing shows "positive counting direction")
With integrated interpolation electronics (for times -5, -10, -25 or -50) the photoelement output signals are converted into two square-wave signals that have a phase shift of 90°. The output signals are "differential" via line driver (RS 422). The measuring step equates to the distance between two edges of the square-wave signals.

The controls/DROs must be able to detect each edge of the square-wave signals. The minimum edge separation a_{min} is listed in the technical data and refers to a measurement at the output of the interpolator (inside the reading head). Propagation-time differences in the line driver, the cable and the line receiver reduce the edge separation.

Propagation-time differences:

Line driver:	max. 10 ns
Cable:	0.2 ns/m
Line receiver:	max. 10 ns (referred to the recommended line receiver circuit)

To prevent counting errors, the controls/DROs must be able to process the resulting edge separation.

Exapmle:
a_{min} = 125 ns, 10 m cable
125 ns - 10 ns - 10 x 0.2 ns - 10 ns = 103 ns

Power supply: +5 V ±10 %, max. 180 mA (unloaded)

Advantages:
- Noise immune signals
- No further subdividing electronics necessary

Square-wave signals „differential"

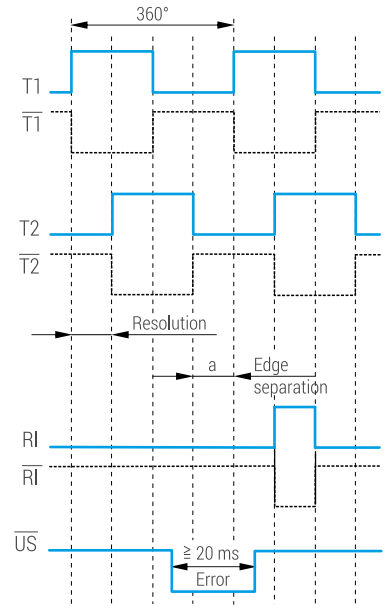

Recommended line receiver

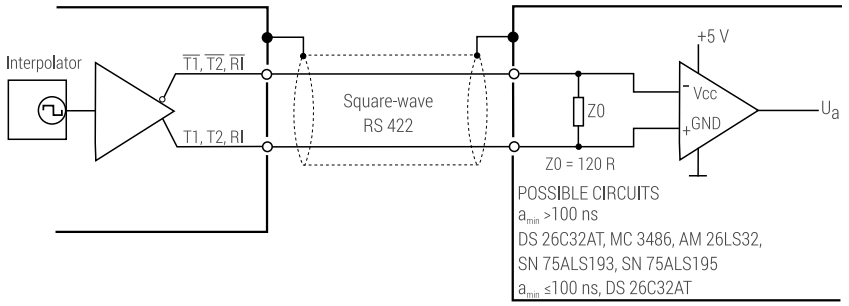

„Positive counting direction"

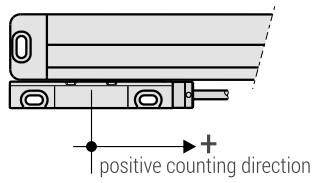

SWITCH SIGNAL OUTPUT

VERSION H

TTL output (active high)

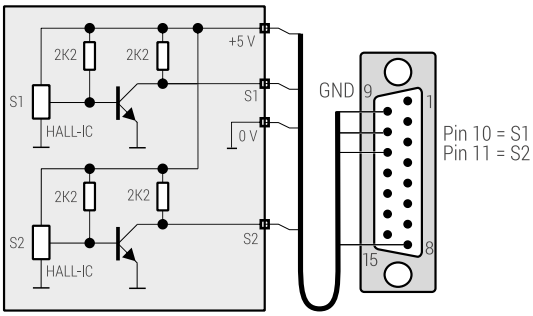

Reading head Cable 15-pin D-sub

S1, S2 = TTL output
I_{SOURCE} = 1 mA (high level > 2 V)
I_{SINK} = 20 mA (low level < 0.8 V)

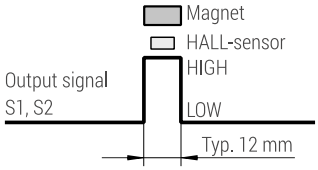

VERSION Z

Open collector output (active high impedance)

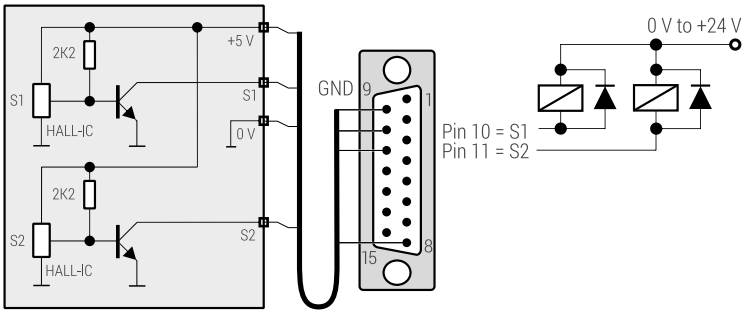

Reading head Cable 15-pin D-sub

S1, S2 = Open collector output
I_{SINK} = 20 mA (low level < 0.8 V)

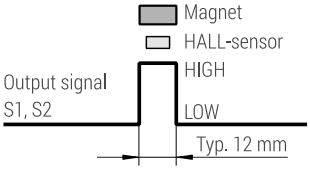

VERSION L

TTL Ausgang (active low)

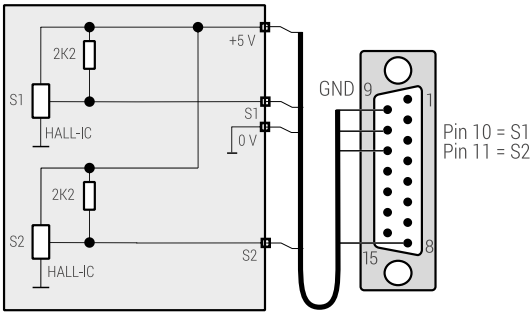

Reading head Cable 15-pin D-sub

S1, S2 = TTL output
I_{SOURCE} = 1 mA (high level > 2 V)
I_{SINK} = 20 mA (low level < 0.8 V)

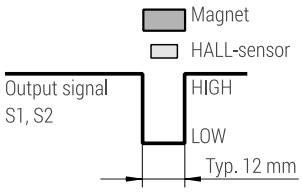

VERSION C

Open collector output (active low)

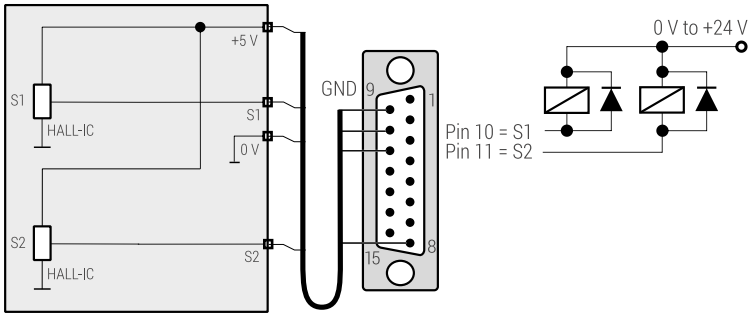

Reading head Cable 15-pin D-sub

S1, S2 = Open collector output
I_{SINK} = 20 mA (low level < 0.8 V)

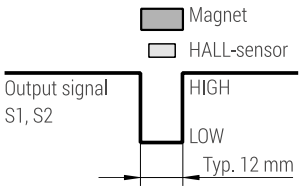

According to factory default setting the actuator magnets are placed at the beginning (S1) and at the end (S2) of measuring length.
The magnets can be moved by the customer.

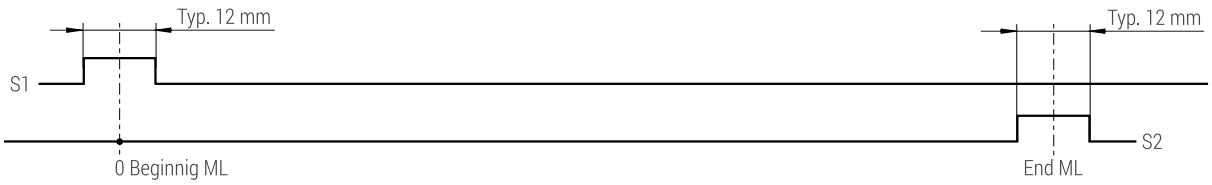

OVERVIEW, SELECTION GUIDE

Linear encoders **MSA 7x0** are equipped with a fixed connecting cable.
Alternatively RSF offers **MSA 8x0** with a detachable connecting cable.

The models **MSA 7x0** and **MSA 8x0** are characterized by a considerably improved thermal behavior.
Flexible fastening elements at the scale unit compensate repeatably the length-extension resp. -contraction, which appears due to temperature variations at the machine.

With a fixed fastening element (left side, middle or right side) a datum-point (thermal fixed-point) is defined.
Additionally it is also possible to fix the scale inside of the extrusion.

MSA 7X0

- **Small** cross-section
- Max. measuring length: 1240 mm
- Fixed connecting cable
- System height: 46 mm resp. 54 mm

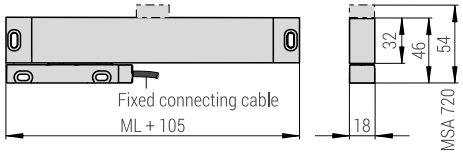

MSA 8X0

- **Small** cross-section
- Max. measuring length: 1240 mm
- Detachable connecting cable
- System height: 49 mm resp. 57 mm

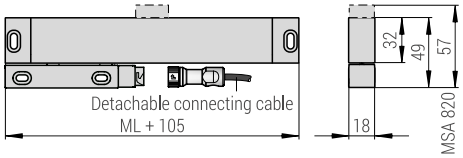

= Fixed fastening element = Flexible fastening element = Additional fixed-point of the scale in the extrusion

MSA X70

- Mounting holes at the ends
- Fixed fastening elements

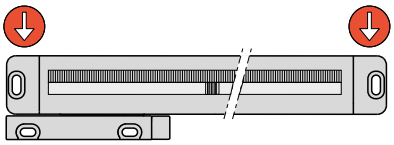

MSA 770, MSA 870 *Page 12*

MSA X10

- Fixed mounting-point left
- Flexible fastening element right

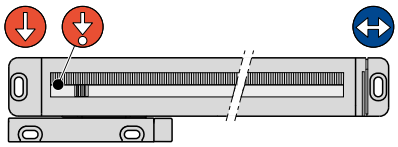

MSA 710, MSA 810 *Page 13*

MSA X20

- Fixed mounting-point centered
- Flexible fastening element left and right

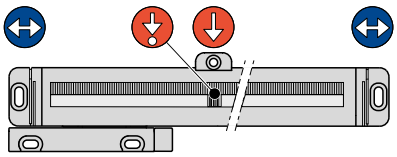

MSA 720, MSA 820 *Page 14*

MSA X30

- Fixed mounting-point right
- Flexible fastening element left

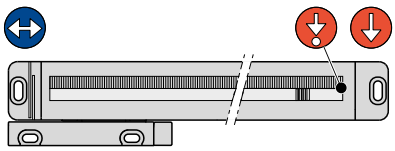

MSA 730, MSA 830 *Page 15*

TECHNICAL DATA MSA 7x0, MSA 8x0

READING HEAD

Model	MSA 7x0 MSA 8x0	MSA 7x0 MSA 8x0	MSA 7x0 MSA 8x0	MSA 7x0 MSA 8x0	MSA 7x0 MSA 8x0
Interface	∿ 1 Vpp	⎍ TTLx5	⎍ TTLx10	⎍ TTLx25	⎍ TTLx50
Measuring step	Depending on external interpolation	1.0 µm	0.5 µm	0.2 µm	0.1 µm
Signal period	20 µm	--	--	--	--
Integrated interpolation	--	Times 5	Times 10	Times 25	Times 50
Max. velocity	2.0 m/s	2.0 m/s	1.96 m/s	0.78 m/s	0.78 m/s
Max. output frequency	100 kHz	--	--	--	--
Edge separation a_{min}	--	250 ns	250 ns	250 ns	125 ns
Electrical connection	Cable, 0.5 m, 1 m or 3 m mit D-sub connector 15-pin or M12 connector 12-pin				
Voltage supply	▪ Sinusoidal voltage signals ∿ 1 Vpp: +5 V ±10 % ▪ Square-wave signals via line driver ⎍: +5 V ±10 %				
Power consumption max.	▪ Sinusoidal voltage signals ∿ 1 Vpp: 825 mW (without load) ▪ Square-wave signals via line driver ⎍: 990 mW (without load)				
Current consumption typ.	▪ Sinusoidal voltage signals ∿ 1 Vpp: 150 mA (without load) ▪ Square-wave signals via line driver ⎍: 180 mA (without load)				
Vibration 55 Hz – 2000 Hz Shock 8 ms	100 m/s² 200 m/s²				
Operating temperature Storage temperature	0 °C to 50 °C −20 °C to 70 °C				
Mass reading head	▪ MSA 7x0: 50 g (without cable) ▪ MSA 8x0: 65 g (without cable) ▪ Cable: 30 g/m, connector: D-sub connector: 28 g, M12 connector: 15 g				

GRADUATION CARRIER

Standard measuring lengths (ML): [mm]	70, 120, 170, 220, 270, 320, 370, 420, 470, 520, 570, 620, 670, 720, 770, 820, 870, 920, 970, 1040, 1140, 1240 (other measuring lengths on request)
Graduation carrier	▪ Glass scale (α ≈ 8.5 x 10^{-6}/K), grating period: 20 µm ▪ Glass ceramic scale (α ≈ 0 x 10^{-6}/K), grating period: 20 µm
Accuracy grades (at 20 °C)	▪ ±5 µm/m ▪ ±3 µm/m
Location of the reference marks (RI):	▪ Distance-coded reference marks ▪ One reference mark in the middle of the ML ▪ Up to ML 970 mm: 35 mm from left and right; from ML 1040 mm: 45 mm from left and right
Required moving force	▪ With standard sealing lips (NBR): < 2.0 N
Environmental protection EN 60529	▪ With standard sealing lips (NBR): IP 53
Mass scale spar (approx.)	▪ MSA 7xx , MSA 8xx: 75 g + 0.57 g/mm (ML)

CONFORMITIES AND CERTIFICATIONS

RoHS	2011/65/EU, 2015/863/EU
EMV	2014/30/EU
Product-Certifications	UL, CSA, EN, IEC 61010-1

MSA 770, MSA 870

Dimensions, mounting tolerances MSA 770:

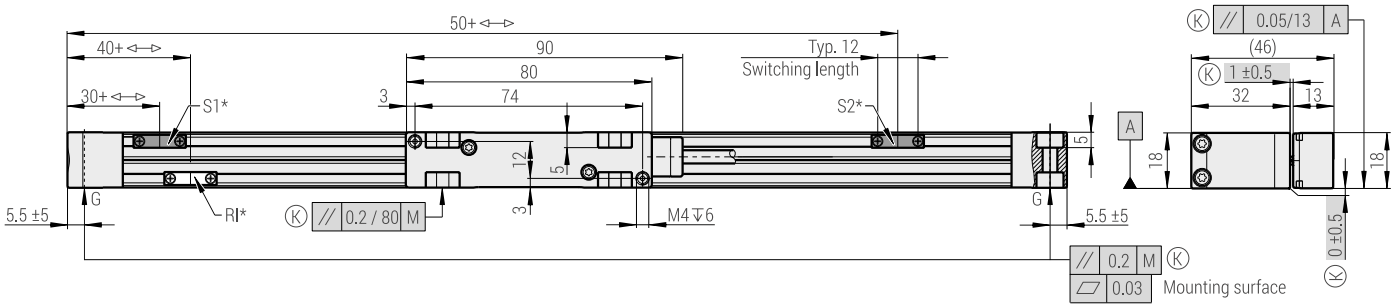

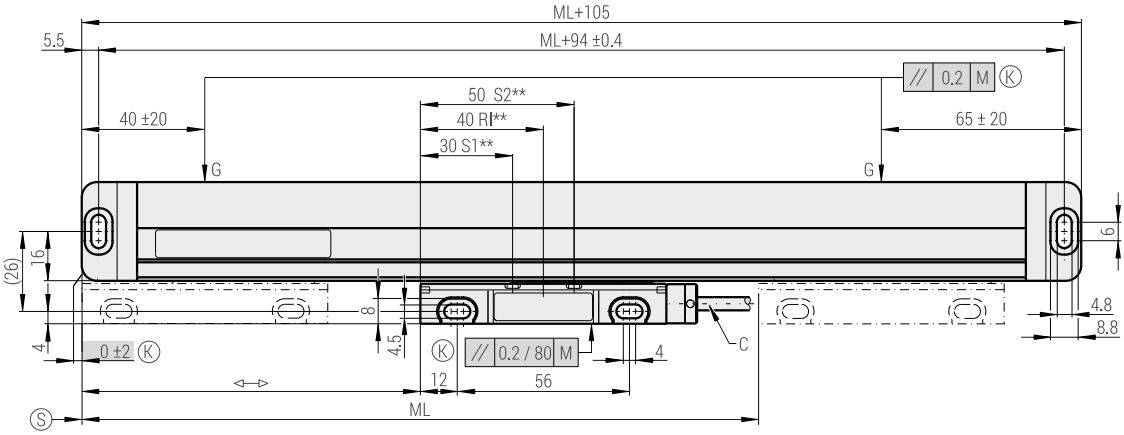

Dimensions, mounting tolerances MSA 870:

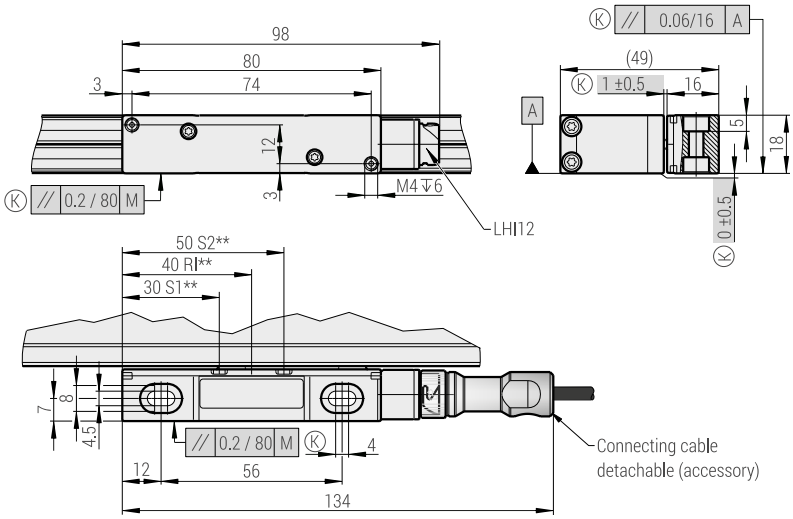

M = Machine guideway
ML = Measuring length
G = Gauging points
⇔ = 0 ... ML
OL = Overall length
C = Cable

LHI12 = Male connector

Ⓚ = Required mating dimensions
Ⓢ = Beginning of the measuring length

OPTIONAL:
S1, S2 = Switch signals
RI = Selectable reference mark
* = Actuator magnet
** = Position sensor

mm
Tolerancing ISO 8015
ISO 2768: 1989 - m H
< 6 mm: ±0.2 mm

MSA 710, MSA 810

MSA 710

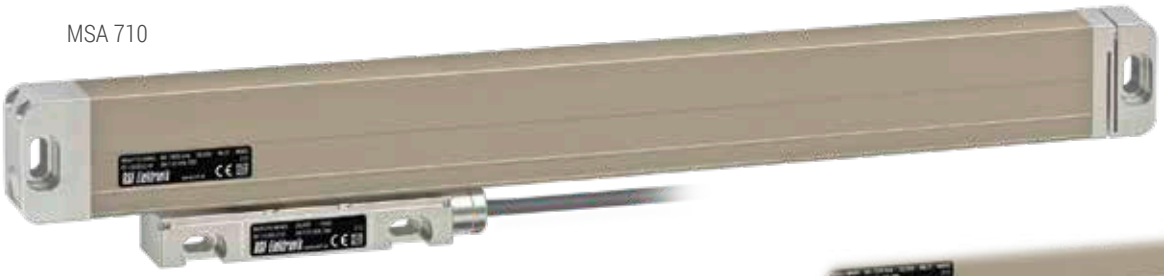

MSA 810

Dimensions, mounting tolerances 710:

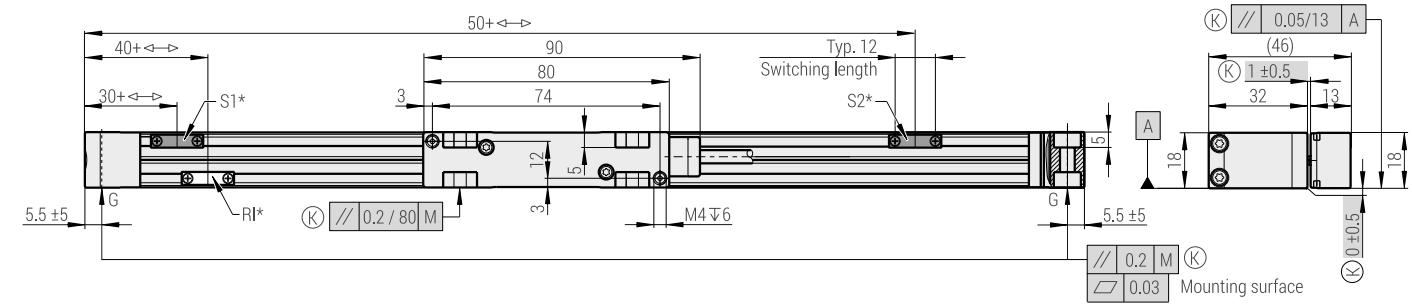

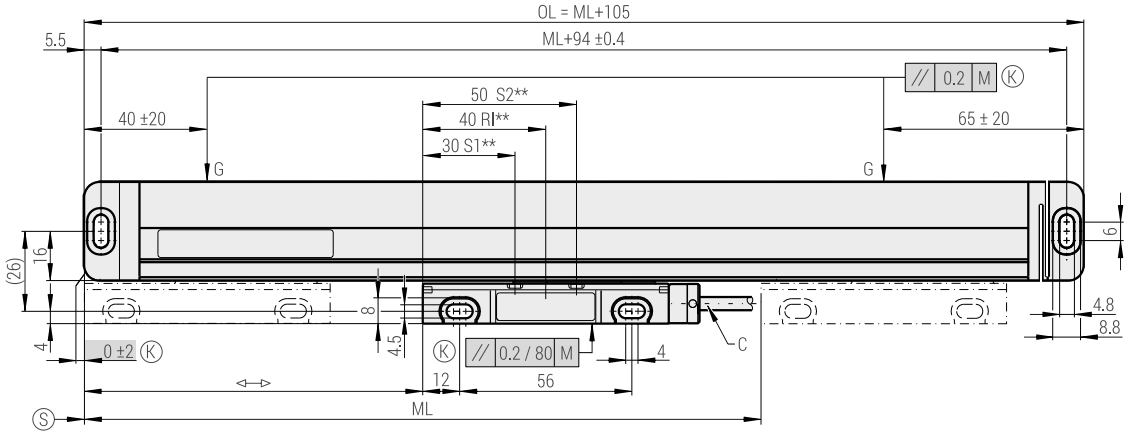

Dimensions, mounting tolerances 810:

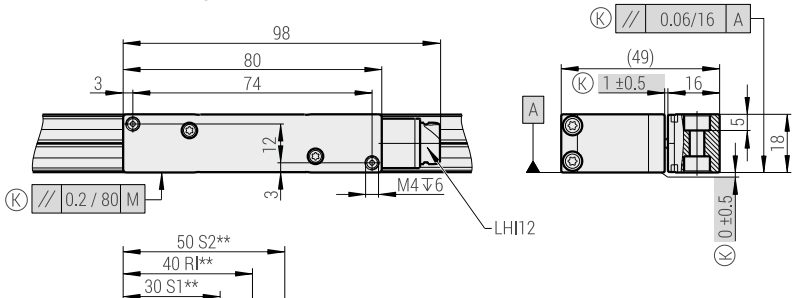

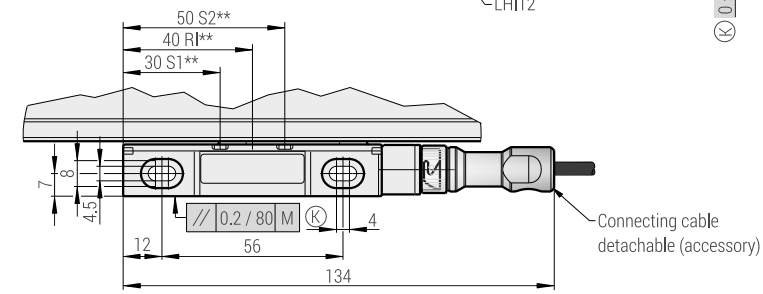

M = Machine guideway
ML = Measuring length
G = Gauging points
⇔ = 0 ... ML
OL = Overall length
C = Cable

LHI12 = Male connector

Ⓚ = Required mating dimensions
Ⓢ = Beginning of the measuring length

OPTIONAL:
S1, S2 = Switch signals
RI = Selectable reference mark
* = Actuator magnet
** = Position sensor

mm
Tolerancing ISO 8015
ISO 2768: 1989 - m H
< 6 mm: ±0.2 mm

MSA 720, MSA 820

MSA 720

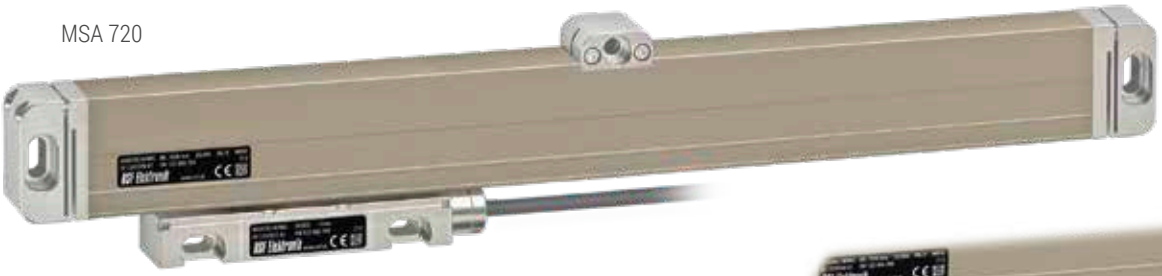

MSA 820

Dimensions, mounting tolerances MSA 720:

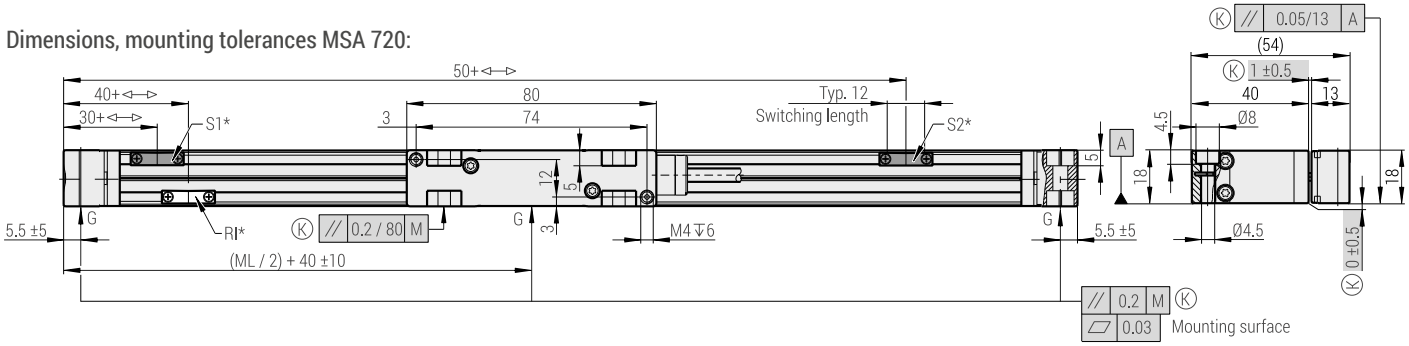

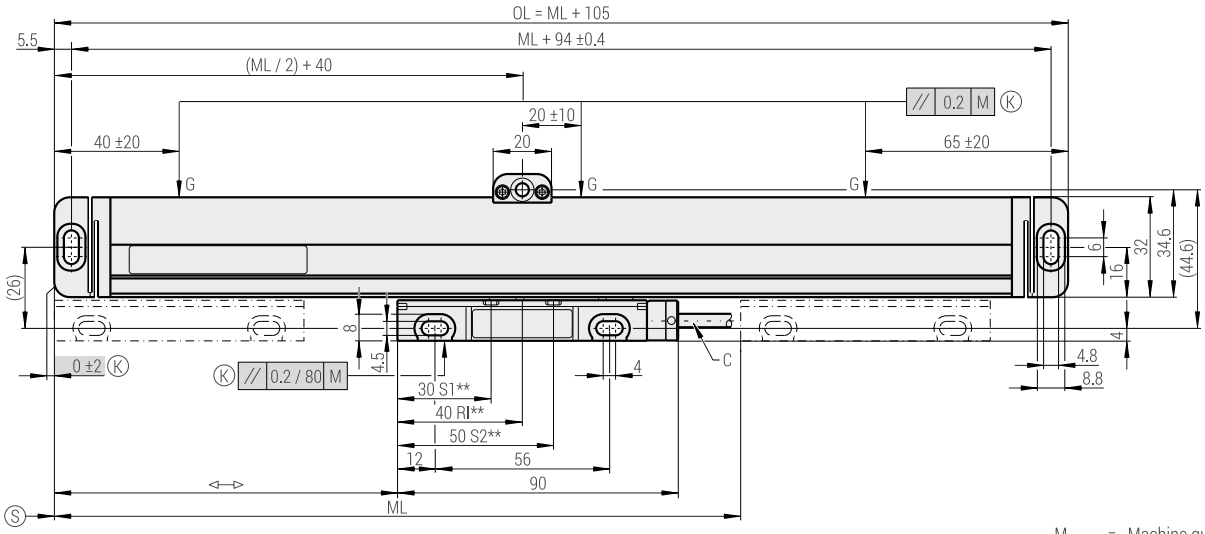

Dimensions, mounting tolerances MSA 820:

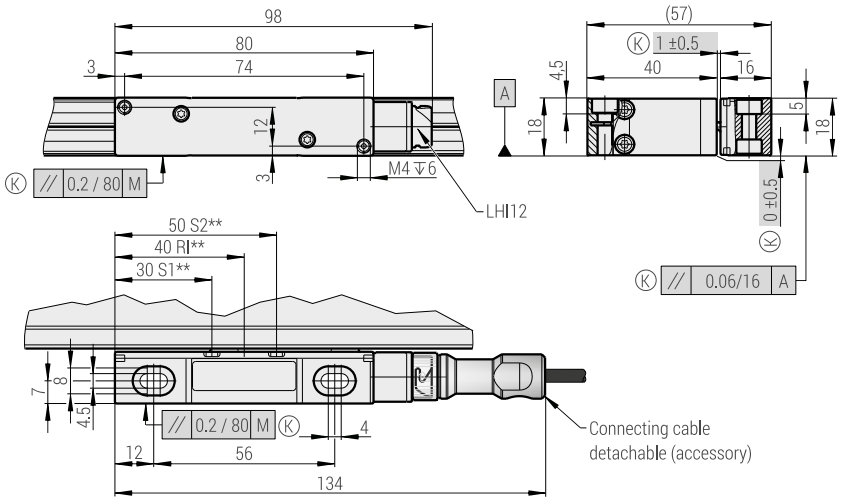

M = Machine guideway
ML = Measuring length
G = Gauging points
◁▷ = 0 ... ML
OL = Overall length
C = Cable

LHI12 = Male connector

Ⓚ = Required mating dimensions
Ⓢ = Beginning of the measuring length

OPTIONAL:
S1, S2 = Switch signals
RI = Selectable reference mark
* = Actuator magnet
** = Position sensor

mm
Tolerancing ISO 8015
ISO 2768: 1989 - m H
< 6 mm: ±0.2 mm

MSA 730, MSA 830

Dimensions, mounting tolerances MSA 730:

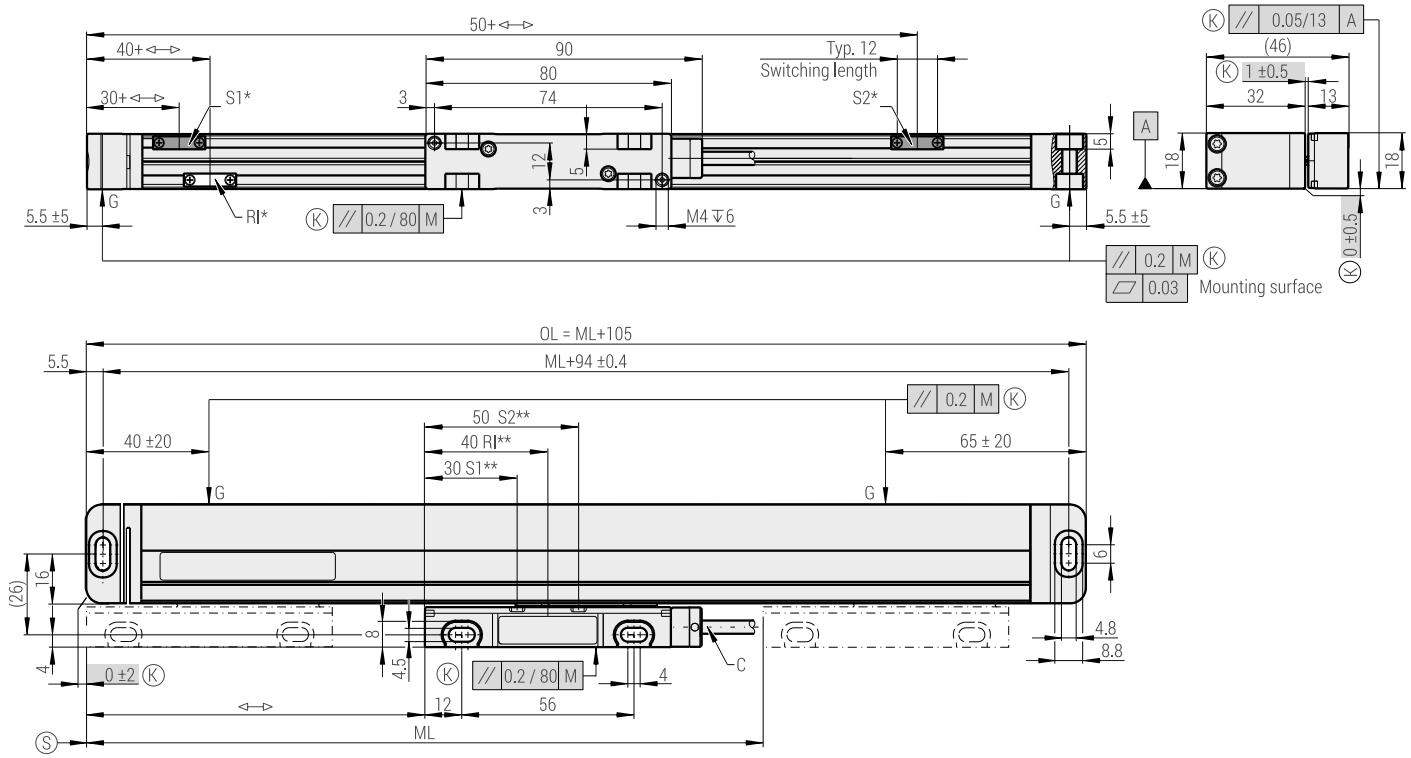

Dimensions, mounting tolerances MSA 830:

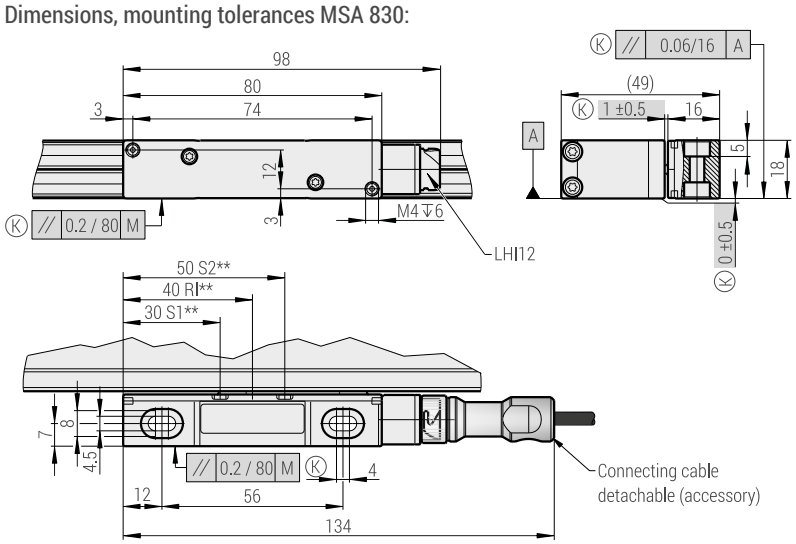

M = Machine guideway
ML = Measuring length
G = Gauging points
⟷ = 0 ... ML
OL = Overall length
C = Cable

LHI12 = Male connector

Ⓚ = Required mating dimensions
Ⓢ = Beginning of the measuring length

OPTIONAL:
S1, S2 = Switch signals
RI = Selectable reference mark
* = Actuator magnet
** = Position sensor

mm
Tolerancing ISO 8015
ISO 2768: 1989 - m H
< 6 mm: ±0.2 mm

DISTRIBUTION CONTACTS

AUSTRIA *Corporate Head Quarters*	**RSF Elektronik Ges.m.b.H.**	A-5121 Tarsdorf 93	☏ +43 62 78 81 92-0 FAX +43 62 78 81 92-79	e-mail: info@rsf.at internet: www.rsf.at
BELGIUM	**HEIDENHAIN NV/SA**	Pamelse Klei 47 1760 Roosdaal	☏ +32 (54) 34 3158 FAX +32 (54) 34 3173	e-mail: sales@heidenhain.be internet: www.heidenhain.be
FRANCE	**HEIDENHAIN FRANCE sarl**	2 Avenue de la Christallerie 92310 Sèvres	☏ +33 1 41 14 30 00 FAX +33 1 41 14 30 30	e-mail: info@heidenhain.fr internet: www.heidenhain.fr
GREAT BRITAIN	**HEIDENHAIN (GB) Ltd.**	200 London Road Burgess Hill West Sussex RH15 9RD	☏ +44 1444 247711 FAX +44 1444 870024	e-mail: sales@heidenhain.co.uk internet: www.heidenhain.co.uk
ITALY	**HEIDENHAIN ITALIANA S.r.l.**	Via Asiago, 14 20128 Milan	☏ +39 02 27075-1 FAX +39 02 27075-210	e-mail: info@heidenhain.it internet: www.heidenhain.it
NETHERLANDS	**HEIDENHAIN NEDERLAND B.V.**	Copernicuslaan 34 6716 BM EDE	☏ +31 318-581800 FAX +31 318-581870	e-mail: verkoop@heidenhain.nl internet: www.heidenhain.nl
SPAIN	**FARRESA ELECTRONICA S.A**	Les Corts 36-38 08028 Barcelona	☏ +34 93 4 092 491 FAX + 34 93 3 395 117	e-mail: farresa@farresa.es internet: www.farresa.es
SWEDEN	**HEIDENHAIN Scandinavia AB**	Rosterigränd 16 SE-117 61 Stockholm	☏ +46 8 531 933 50 FAX +46 8 531 933 77	e-mail: sales@heidenhain.se internet: www.heidenhain.se
SWITZERLAND	**HEIDENHAIN (SCHWEIZ) AG**	Vieristrasse 14 8603 Schwerzenbach	☏ +41 44 806 27 27 FAX +41 44 806 27 28	e-mail: verkauf@heidenhain.ch internet: www.heidenhain.ch
CHINA	**DR. JOHANNES HEIDENHAIN (CHINA) Co., Ltd**	Tian Wei San Jie, Area A, Beijing Tianzhu Airport Industrial Zone Shunyi District, Beijing 101312	☏ +86 10 80 42-0000	e-mail: sales@heidenhain.com.cn internet: www.heidenhain.com.cn
ISRAEL	**MEDITAL Hi-Tech**	36 Shacham St., P.O.Box 7772 4951729 Petach Tikva	☏ +972 0 3 923 33 23 FAX +972 0 3 923 16 66	e-mail: avi@medital.co.il internet: www.medital.co.il
JAPAN	**HEIDENHAIN K.K.**	Hulic Kojimachi Bldg., 9F 3-2 Kojimachi, Chiyoda-ku Tokyo, 102-0083	☏ +81 3 3234 7781 FAX +81 3 3262 2539	e-mail: sales@heidenhain.co.jp internet: www.heidenhain.co.jp
KOREA	**HEIDENHAIN LTD.**	75, Jeonpa-ro 24beon-gil, Manan-gu, Anyang-si 14087 Gyeonggi-do	☏ +82 31 380 5200 FAX +82 31 380 5250	e-mail: info@heidenhain.co.kr internet: www.heidenhain.co.kr
SINGAPORE	**HEIDENHAIN PACIFIC PTE LTD.**	51, Ubi Crescent 408593 Singapore	☏ +65 67 49 32 38 FAX +65 67 49 39 22	e-mail: info@heidenhain.com.sg internet: www.heidenhain.com.sg
TAIWAN	**HEIDENHAIN CO., LTD.**	No. 29, 33rd Road; Taichung Industrial Park Taichung 40768	☏ +886 4 2358 89 77 FAX +886 4 2358 89 78	e-mail: info@heidenhain.tw internet: www.heidenhain.com.tw
USA	**HEIDENHAIN CORPORATION**	333 East State Parkway Schaumburg, IL 60173-5337	☏ +1 847 490 11 91	e-mail: info@heidenhain.com internet: www.heidenhain.com

Date 06/2024 ▪ Art.No.1340379-01 ▪ Doc.No. D1340379-01-F-01 ▪ Technical adjustments in reserve!