HEIDENHAIN

Linear Encoders

For Numerically Controlled Machine Tools

https://www.heidenhain.com/products/linear-encoders

09/2025

For more information, visit
www.heidenhain.com, or contact us.

Brochures regarding:
- Exposed linear encoders
- Angle encoders with integral bearing
- Angle encoder modules
- Modular angle encoders with scale drum or scale tape
- Rotary encoders
- HEIDENHAIN controls
- Encoders for machine tool inspection and acceptance testing
- Interfaces of HEIDENHAIN encoders

Technical Information documents:
- Accuracy of Feed Axes
- EnDat 2.2: Bidirectional Interface for Position Encoders
- Encoders for Feed Axes with Direct-Drive Motors

This brochure supersedes all previous editions, which thereby become invalid. The basis for ordering from HEIDENHAIN is always the brochure edition valid when the order is placed.

Standards (ISO, EN, etc.) apply only where explicitly stated in the brochure.

Further information:

For detailed descriptions of all available interfaces, as well as general electrical information, please refer to the Interfaces of HEIDENHAIN Encoders brochure.

Contents

Overview			
	Linear encoders		**4**
	Selection guide		**6**
Technical characteristics and mounting			
	Measuring principles	Measuring standard	**8**
		Absolute measuring method	**8**
		Incremental measuring method	**9**
		Photoelectric scanning principle	**10**
	Measuring accuracy		**12**
	Mechanical design types and mounting		**14**
	General information		**18**
	Functional safety		**20**
Specifications			
Linear encoder	Series or model		
For absolute position measurement	**LC 400 series**		**22**
	LC 100 series		**30**
For absolute position measurement over long measuring lengths	**LC 200 series (single-section)**		**38**
	LC 200 series (multi-section)		**42**
For incremental linear measurement	**LS 400 series**		**46**
	LS 100 series		**48**
For incremental linear measurement over long measuring lengths	**LB 383C (single-section)**		**50**
	LB 383C (multi-section)		**54**
Further information			
	Diagnostics, and inspection and testing devices		**58**
	Related documents		**59**

Linear encoders for numerically controlled machine tools

HEIDENHAIN linear encoders for numerically controlled machine tools can be used nearly everywhere. They are ideal for machines and other equipment whose feed axes are in a closed loop, such as milling machines, machining centers, boring mills, lathes, and grinding machines. The beneficial dynamic behavior of these linear encoders, their high permissible traversing speed, and their acceleration in the direction of measurement make them ideal for use on highly dynamic conventional axes as well as on direct-drive motors.

HEIDENHAIN also supplies linear encoders for other applications, such as:
- Manual machine tools
- Presses and bending machines
- Automation and production equipment

Benefits of linear encoders
If a linear encoder is used to provide position feedback for a slide, then the position control loop encompasses the entire feed mechanics. This is referred to as closed-loop operation. Transfer errors from the mechanics can be detected by the linear encoder on the feed axis and corrected by the control electronics. This makes it possible to eliminate a number of potential error sources:
- Positioning error due to thermal changes in the recirculating ball screw
- Reversal error
- Kinematic error through the ball-screw pitch error

Linear encoders are therefore indispensable for machine tools on which high **positioning accuracy** and a high **machining rate** are essential.

Mechanical design
Linear encoders for numerically controlled machine tools are sealed measuring devices: an aluminum housing protects the scale, the scanning carriage, and its guide from chips, dust, and splash water. Downward-oriented elastic lips seal the housing.

The scanning carriage travels along the scale on a low-friction guide. A coupling connects the scanning carriage with the mounting block and compensates for the misalignment between the scale and the machine slide.

Depending on the encoder model, lateral and axial offsets of ±0.2 mm to ±0.3 mm between the scale and mounting block are permissible.

Further information:

Please request further documentation or find out more at *www.heidenhain.com*.

CLOSED LOOP HEIDENHAIN ACCURACY

Thermal characteristics
Increasingly faster machining times with fully encapsulated machines cause ever higher temperatures in the machine's working space. Therefore, the thermal behavior of the linear encoders used becomes increasingly important, since it is an essential criterion for the working accuracy of the machine.

As a general rule, the thermal behavior of the linear encoder should match that of the workpiece or measured object. During temperature changes, the linear encoder must expand or contract in a defined, reproducible manner. Linear encoders from HEIDENHAIN are designed to do this.

The graduation carriers of HEIDENHAIN linear encoders have defined coefficients of linear thermal expansion (see specifications). This makes it possible to select the linear encoder whose thermal behavior is best suited to the application.

Dynamic behavior
Efficiency and performance improvements in machine tools require ever higher feed rates and accelerations. Of course, they must not compromise machining accuracy. In order to transfer rapid and yet exact feed motions, very high demands are placed on rigid machine design as well as on the linear encoders used.

Linear encoders from HEIDENHAIN are characterized by their high rigidity in the direction of measurement. This is a very important prerequisite for high-quality contouring accuracy of a machine tool. In addition, the low mass of moving components contributes to their excellent dynamic behavior.

Availability
The feed axes of machine tools travel quite large distances—a typical amount is 10000 km in three years. This is why sturdy encoders with good long-term stability are especially important: they ensure the constant availability of the machine.

Due to the details of their design, linear encoders from HEIDENHAIN function properly even after years of operation. A long service life is ensured by the non-contact photoelectric scanning of the measuring standard and by the ball-bearing guidance of the scanning carriage in the scale housing. Thanks to their enclosure, special scanning principles, and—if required—a purge air connection, the linear encoders are particularly tolerant to contamination. The complete shielding design ensures a high degree of electrical noise immunity.

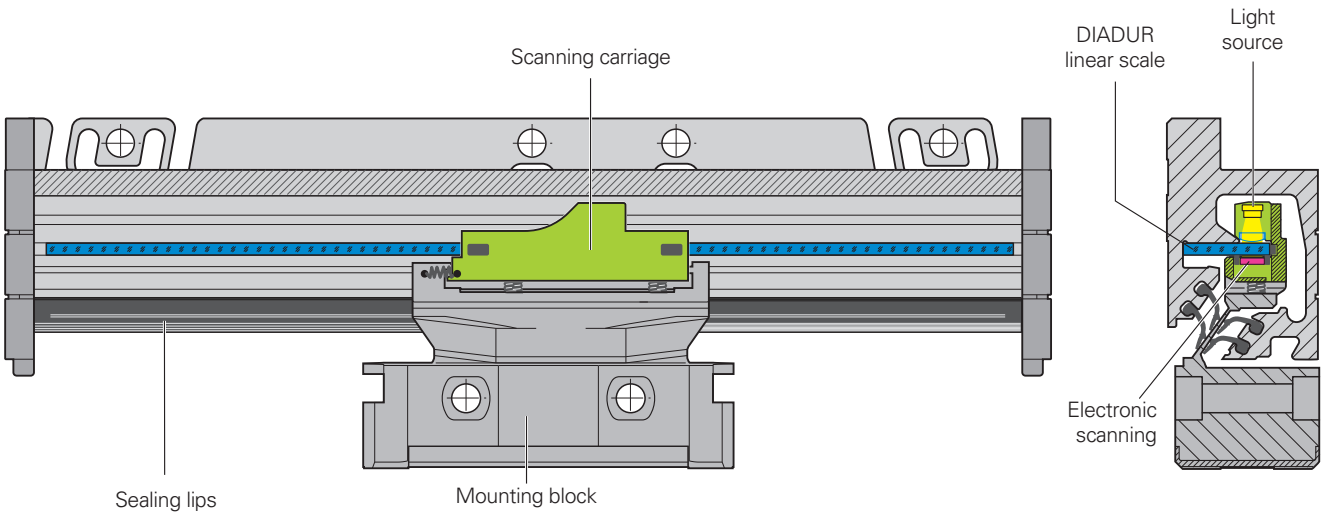

Schematic design of the **LC 115** sealed linear encoder

Selection guide

Linear encoders with slimline scale housing

The linear encoders with **slimline scale housing** are designed for **limited installation space**. Longer measuring lengths and higher acceleration loads are possible through the use of a mounting spar or clamping elements.

	Cross section	Accuracy grade	Max. interpolation error	Measuring length (ML)
Absolute position measurement • Glass scale	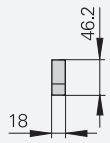	±5 µm ±3 µm	±0.1 µm[1)]	70 mm to 1240 mm With mounting spar or clamping elements: 70 mm to 2040 mm
Incremental linear measurement • Glass scale	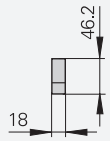	±5 µm ±3 µm	±0.2 µm	70 mm to 1240 mm With mounting spar: 70 mm to 2040 mm

Linear encoders with full-size scale housing

Linear encoders with **full-size scale housing** are characterized by their **sturdy design, high resistance to vibration,** and **large measuring lengths**. Their angled connection between the scanning carriage and the mounting block permits **vertical and horizontal mounting** with the same protection rating.

Absolute position measurement • Glass scale	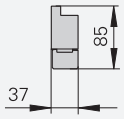	±5 µm ±3 µm	±0.1 µm[2)3)]	140 mm to 4240 mm
Absolute position measurement for long measuring lengths • Steel scale tape	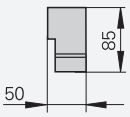	±5 µm	±0.4 µm	440 mm to 28 040 mm
Incremental linear measurement • Glass scale	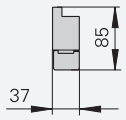	±5 µm ±3 µm	±0.2 µm	140 mm to 3040 mm
Incremental linear measurement for long measuring lengths • Steel scale tape	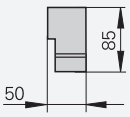	±5 µm	±0.8 µm	440 mm to 30 040 mm Up to ML of 72 040 mm upon request

[1)] Typical values with LC 4x5: ±0.02 µm; LC 4x6: ±0.03 µm
[2)] Typical values with LC 1x5: ±0.02 µm; LC 1x6: ±0.03 µm

	Signal period	Interface	Model	Page
	–	EnDat 2.2	**LC 415**[4] **LC 416**	**22**
	20 µm	EnDat 2.2 with ∿ 1 V_{PP}	**LC 485**	
	–	DRIVE-CLiQ	**LC 495 S** **LC 496 S**	**24**
		Fanuc αi	**LC 495 F** **LC 496 F**	
		Mitsubishi	**LC 495 M** **LC 496 M**	
		Panasonic	**LC 495 P**	
	20 µm	∿ 1 V_{PP}	**LS 487**	**46**
	–	⊓⊔ TTL	**LS 477**	
	–	EnDat 2.2	**LC 115**[2] **LC 116**	**30**
	20 µm	EnDat 2.2 with ∿ 1 V_{PP}	**LC 185**	
	–	DRIVE-CLiQ	**LC 195 S** **LC 196 S**	**32**
		Fanuc αi	**LC 195 F** **LC 196 F**	
		Mitsubishi	**LC 195 M** **LC 196 M**	
		Panasonic	**LC 195 P**	
	–	EnDat 2.2	**LC 211**	**38**
	40 µm	EnDat 2.2 with ∿ 1 V_{PP}	**LC 281**	
	–	Fanuc αi	**LC 291 F**	
		Mitsubishi	**LC 291 M**	
	20 µm	∿ 1 V_{PP}	**LS 187**	**48**
	–	⊓⊔ TTL	**LS 177**	
	40 µm	∿ 1 V_{PP}	**LB 383 C**	**50**

[3] With measuring lengths > 3040 mm: ±0.4 µm at butt joint (approx. at position 3100 mm)
[4] Connectable to Yaskawa interface via EIB 3391Y

LC 415
LC 416

LS 487

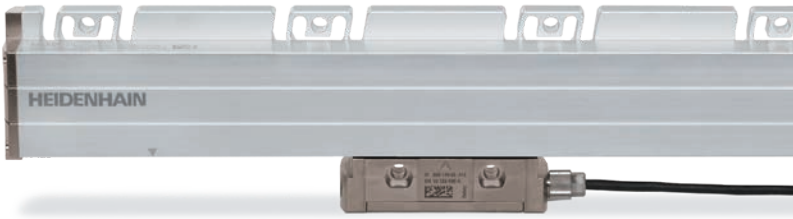

LC 115
LC 116

LC 211

Measuring principles

Measuring standard

HEIDENHAIN encoders with optical scanning incorporate measuring standards consisting of periodic structures known as graduations.

These graduations are applied to a carrier substrate made of glass or steel. For encoders with long measuring lengths, steel tape is used as the scale substrate.

HEIDENHAIN manufactures its precision graduations in the following specially developed, photolithographic processes:

- METALLUR: contamination-tolerant graduation consisting of metal lines on gold; typical grating period: 40 µm
- DIADUR: extremely robust chromium lines on glass (typical grating period: 20 µm), or three-dimensional chromium structures (typical grating period: 8 µm) on glass
- SUPRADUR phase grating: optically three-dimensional, planar structure; particularly tolerant to contamination; typical grating period: 8 µm and finer
- OPTODUR phase grating: optically three-dimensional, planar structure with particularly high reflectance; typical grating period: 2 µm and finer

Along with the very fine grating periods, these processes enable high edge resolution and excellent homogeneity of the graduation. In combination with the photoelectric scanning method, these characteristics are critical for attaining high-quality output signals.

The master graduations are manufactured by HEIDENHAIN on custom-built, high-precision dividing engines.

Absolute measuring method

In the **absolute measuring method**, the position is available immediately upon encoder switch-on and can be requested by the downstream electronics at any time. There is therefore no need to search for the reference position by jogging the axes. The absolute position information is read **from the scale graduation**, which is formed from a serial absolute code structure. A separate incremental track is interpolated for the position value and is simultaneously used to generate an optional incremental signal.

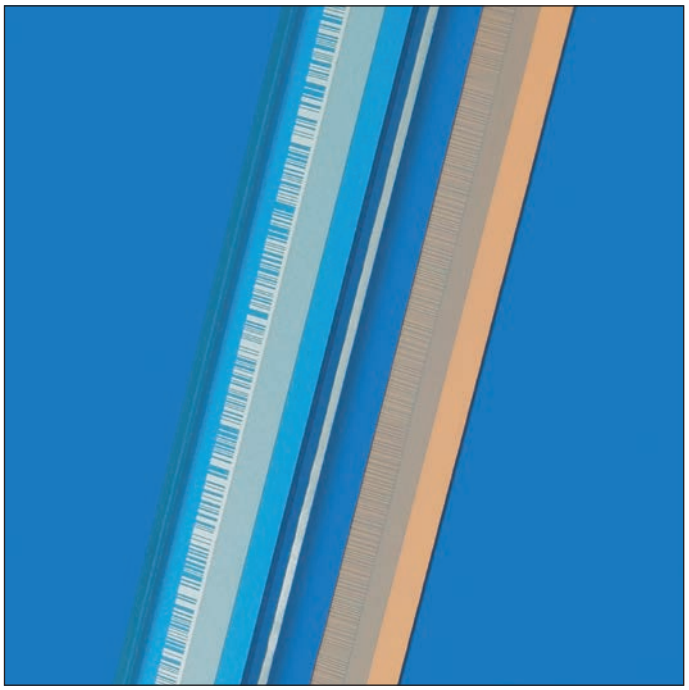

Graduations of absolute linear encoders

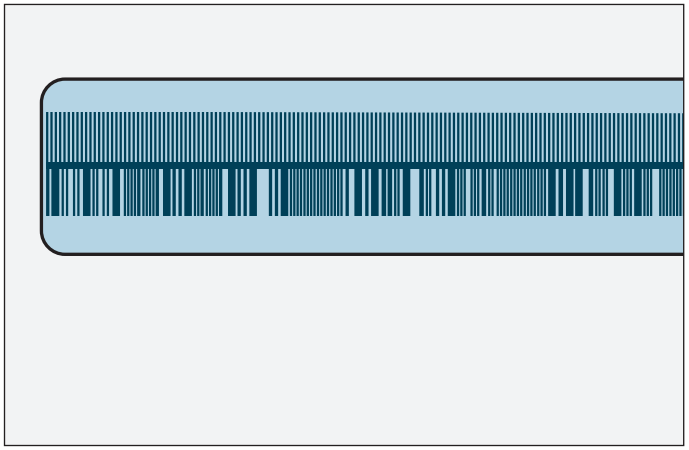

Schematic representation of an absolute code structure with an additional incremental track (LC 485 as example)

Incremental measuring method

In the **incremental measuring method**, the graduation is a periodic grating structure. The position information is obtained **through counting** the individual increments (measuring steps) starting at a freely defined point of origin. Since the ascertainment of positions requires an absolute reference, the scales or scale tapes feature an additional track bearing a **reference mark**. The absolute position on the scale, established by the reference mark, is gated with exactly one signal period. Thus, before absolute referencing can be established or the most recently selected reference point can be refound, this reference mark must first be crossed.

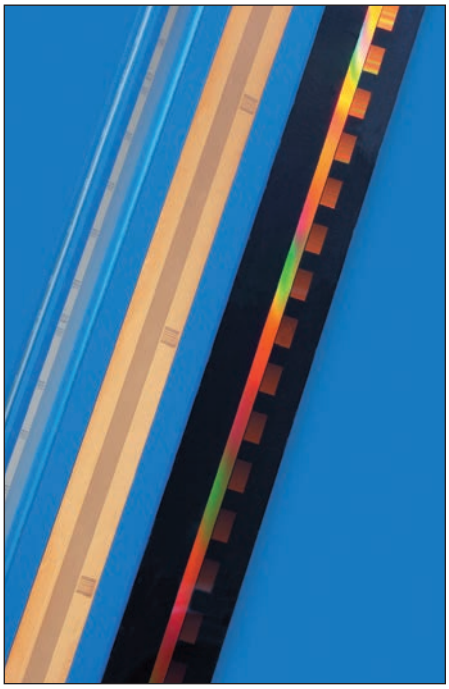

Graduations of incremental linear encoders

In the most unfavorable case, machine movements over sizeable sections of the measuring range may be necessary. To speed up and simplify such reference runs, many HEIDENHAIN encoders feature **distance-coded reference marks**—multiple reference marks that are individually spaced in accordance with a mathematical algorithm. The downstream electronics find the absolute reference when two successive reference marks are crossed after only a few millimeters of travel (see table below). Encoders with distance-coded reference marks are identified with a "C" after the model designation (e.g., LS 487 C).

With distance-coded reference marks, the **absolute reference** is calculated by counting the increments between two reference marks and by applying the following formula:

$$P_1 = (\text{abs } R - \text{sgn } R - 1) \cdot \frac{N}{2} + (\text{sgn } R - \text{sgn } D) \cdot \frac{\text{abs } M_{RR}}{2}$$

and:

$$R = 2 \cdot M_{RR} - N$$

Definitions:

P_1 = Position of the first traversed reference mark in signal periods

abs = Absolute value

sgn = Algebraic sign function (+1 or –1)

M_{RR} = Number of signal periods between the traversed reference marks

N = Nominal increment between two fixed reference marks in signal periods (see table below)

D = Direction of travel (+1 or –1). Traverse of scanning unit to the right (when installed as per mating dimensions) equals +1

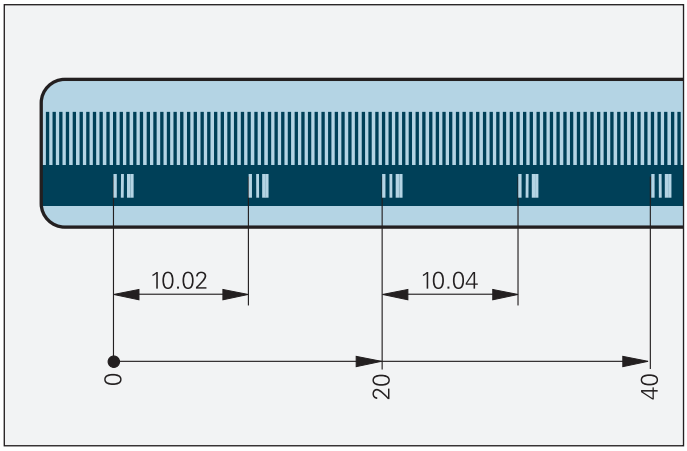

Schematic representation of an incremental graduation with distance-coded reference marks (LS as example)

	Signal period	Nominal increment N in signal periods	Maximum traverse
LS	20 µm	1000	20 mm
LB	40 µm	2000	80 mm

Photoelectric scanning principle

Most HEIDENHAIN encoders utilize the photoelectric scanning principle. Photoelectric scanning is non-contact and therefore does not induce wear. This method detects even extremely fine graduation lines down to a width of only a few microns and generates output signals with very small signal periods.

Sealed linear encoders for machine tools use the imaging measuring principle. Some also use TRUE IMAGE TECHNOLOGY.

Imaging scanning principle
Put simply, the imaging scanning principle uses projected-light signal generation: two gratings with equal or similar grating periods—the measuring standard and the scanning reticle—are moved relative to each other. The carrier material of the scanning reticle is transparent, whereas the graduation of the measuring standard may be applied to a transparent material or to a reflective material.

When parallel light passes through a grating structure, light and dark fields are projected at a certain distance. At this location there is an index grating. When the two gratings move relative to each other, the incident light is modulated. If the gaps are aligned, light passes through. If the lines of one grating coincide with the gaps of the other, no light passes through. A photocell array converts these variations in light intensity into electrical signals. The specially structured grating of the scanning reticle filters the light to generate nearly sinusoidal output signals.

The smaller the grating period of the grating structure, the closer and more tightly toleranced the gap must be between the scanning reticle and the scale.

The LC, LS, and LB linear encoders use the imaging scanning principle.

Imaging scanning principle

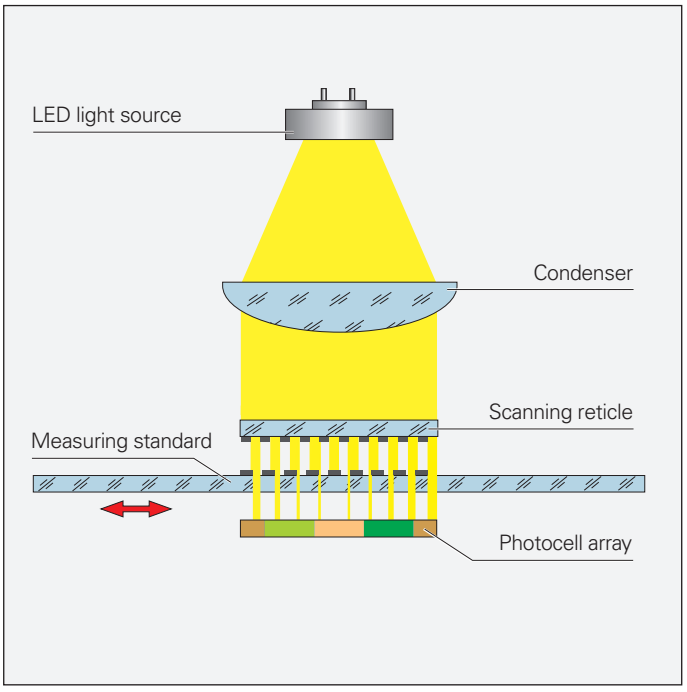

TRUE IMAGE TECHNOLOGY
Innovative TRUE IMAGE TECHNOLOGY from HEIDENHAIN ensures that the encoder's scale is accurately scanned even if it is exposed to condensation and other liquid contamination. In conventional encoders, drops of liquid on the scale cause the graduations to appear distorted to the photocell, with droplets behaving like lenses that diffract parallel light. This phenomenon significantly limits the accuracy of the position measurement.

TRUE IMAGE TECHNOLOGY, however, uses a special light guiding element to almost completely eliminate these distortions. The photosensor receives a largely clear image of the scale and can identify the position despite liquid contamination.

Encoders with TRUE IMAGE TECHNOLOGY reliably deliver high-accuracy position feedback. Thanks to their contamination-resistant optics, these encoders keep machine tools productive, even without purge air. The machine's compressed air system can therefore be greatly simplified. As a result, TRUE IMAGE TECHNOLOGY helps to significantly reduce costs, installation work, and malfunctions.

For the LC 1x6, LC 4x6, and LC 200 sealed linear encoders, this ensures a largely unhindered image of the scale, even when condensation and other contamination are involved. The benefits of TRUE IMAGE TECHNOLOGY:

- Reduced carbon footprint and TCO
- Dependable position feedback even without purge air
- Sustainably high productivity through contamination-immune optics
- Fewer machine components thanks to a simpler purge air system
- Reduced mounting and maintenance work

Further information:
To find out more about TRUE IMAGE TECHNOLOGY, visit *www.heidenhain.de/true-image*.

Droplets refract the light

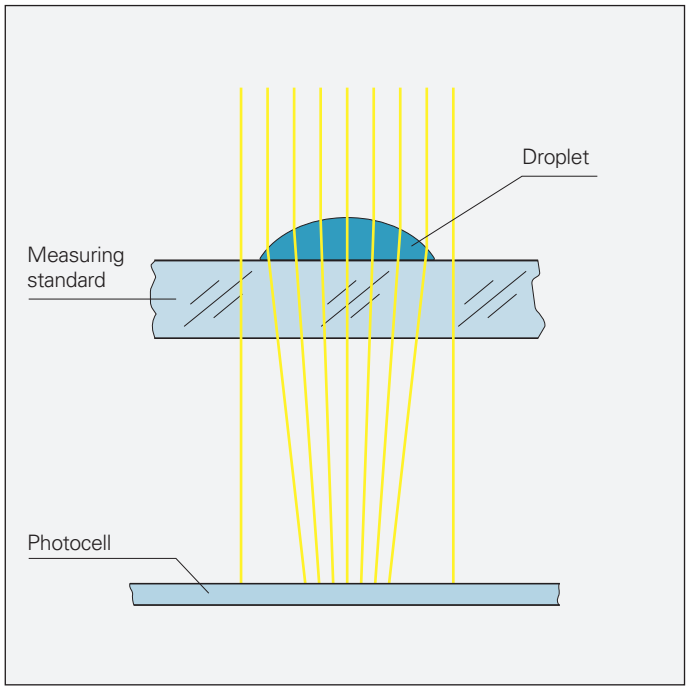

The light guiding element keeps the light parallel

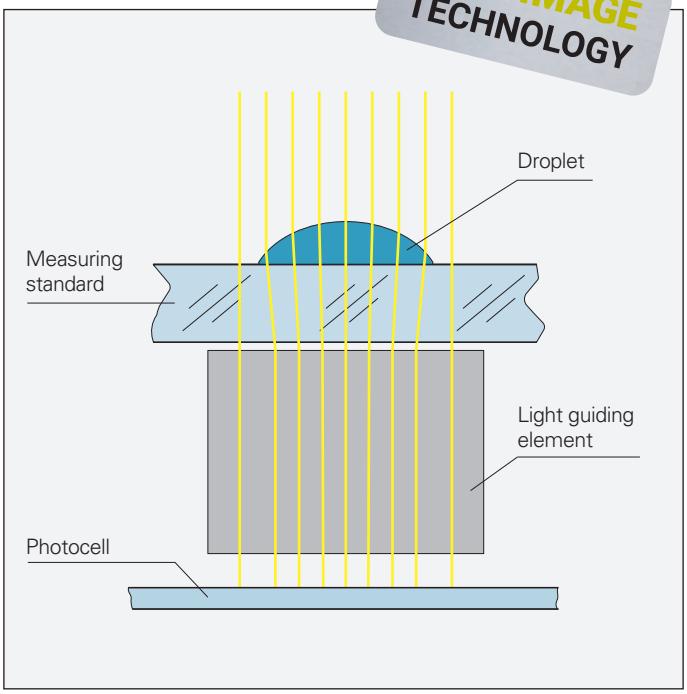

Measuring accuracy

The accuracy of the linear measurement is mainly determined by the following factors:
- The quality of the graduation
- The quality of the graduation carrier
- The quality of the scanning process
- The quality of the signal processing electronics
- The quality of the encoder mechanics
- How the encoder is installed within the machine

These factors can be subdivided into encoder-specific position errors and application-dependent factors. For assessment of the attainable **overall accuracy**, all of these individual factors must be taken into account.

Encoder-specific position error

Encoder-specific position error includes:
- The accuracy of the measuring standard
- The interpolation accuracy
- The position noise
- The quality of the encoder's mechanical design

The accuracy of the measuring standard
The accuracy of the measuring standard is primarily dictated by the homogeneity of the graduation.

It is stated as the maximum value of the **baseline error**. The distance between the measuring points is equivalent to the integer multiple of the signal period. As a result, interpolation errors have no effect. The sealed linear encoders are separated into accuracy grades for easier differentiation. The **accuracy grade *a*** defines the upper limit of the baseline error within any section of up to one meter in length. The baseline error F is ascertained during final inspection and is indicated on the quality inspection document.

Interpolation accuracy
The interpolation error has an effect even at very low traversing speeds and during repeated measurements. Fluctuations in the traversing speed are a result, particularly within the speed control loop. Within the application, the interpolation error affects the machining results, such as the surface quality.

The interpolation accuracy is primarily influenced by:
- The fineness of the signal period
- The homogeneity and period resolution of the graduation
- The quality of the scanning filter structures
- The characteristics of the sensors
- The quality of the signal processing

The interpolation accuracy is stated in the form of a maximum value ***u*** of the interpolation error. Encoders with an analog interface are tested with an electronics unit from HEIDENHAIN (e.g., an EIB 741).

Position noise
Position noise causes small, random deviations from the expected value. Position noise also depends on the quality of the signal processing. Typically, the position noise is less than 1 ‰ of the signal period.

Application-dependent position error

Mounting
Guided linear encoders from HEIDENHAIN compensate for movements between the scale and scanning unit that are not in the direction of movement. This makes it possible to realize very wide mounting tolerances with minimal effect on the **overall accuracy**.

Influence of temperature
Linear encoders from HEIDENHAIN exhibit defined and repeatable thermal behavior under temperature fluctuations. The coefficient of linear thermal expansion is listed in the encoder specifications.

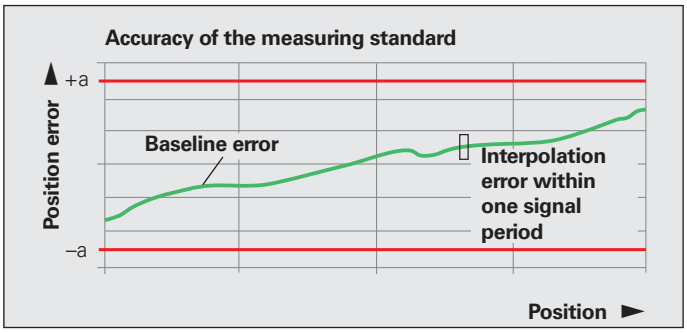

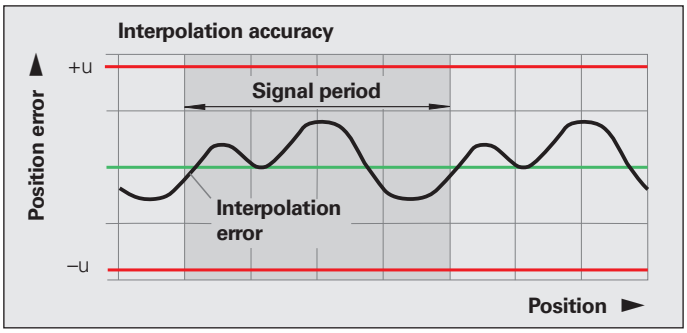

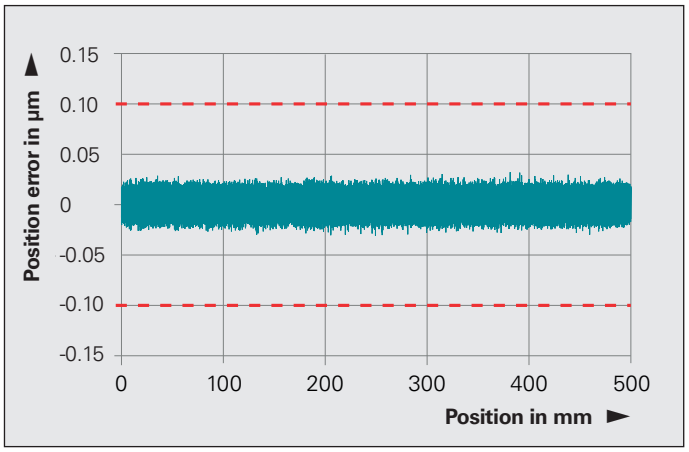

LC 415 interpolation error:
The diagram above shows the measured interpolation error of an LC 415 over a measuring range of 500 nm. The area marked red indicates the maximum interpolation error *u*.

Calibration chart

All HEIDENHAIN linear encoders are inspected for accuracy and proper functioning prior to shipping.

The position error is determined as the average value of one forward and one reverse measurement during final inspection.

The **Quality Inspection Document** confirms the stated **graduation accuracy** of each encoder. The **calibration standards** ensure traceability to recognized national or international standards, as required by EN ISO 9001.

For the LC 100, LC 400, and LS series, as well as for single-section scale tapes, the Quality Inspection Document also records the position error ascertained along the entire measuring length. This is stated as the baseline error F. The measuring parameters and the uncertainty of the measuring machine are also provided.

Temperature range
The linear encoders are calibrated at a **reference temperature** of 20 °C. The position error documented in the calibration chart is valid at this temperature.

The **operating temperature range** states the limits of ambient temperature within which the linear encoder will function properly.

The **storage temperature range** of –20 °C to +70 °C applies when the unit remains in its packaging. With measuring lengths equal to or greater than 3240 mm, the permissible storage temperature range for the LC 1x5 and LC 1x6 encoders is limited to –10 °C to +50 °C.

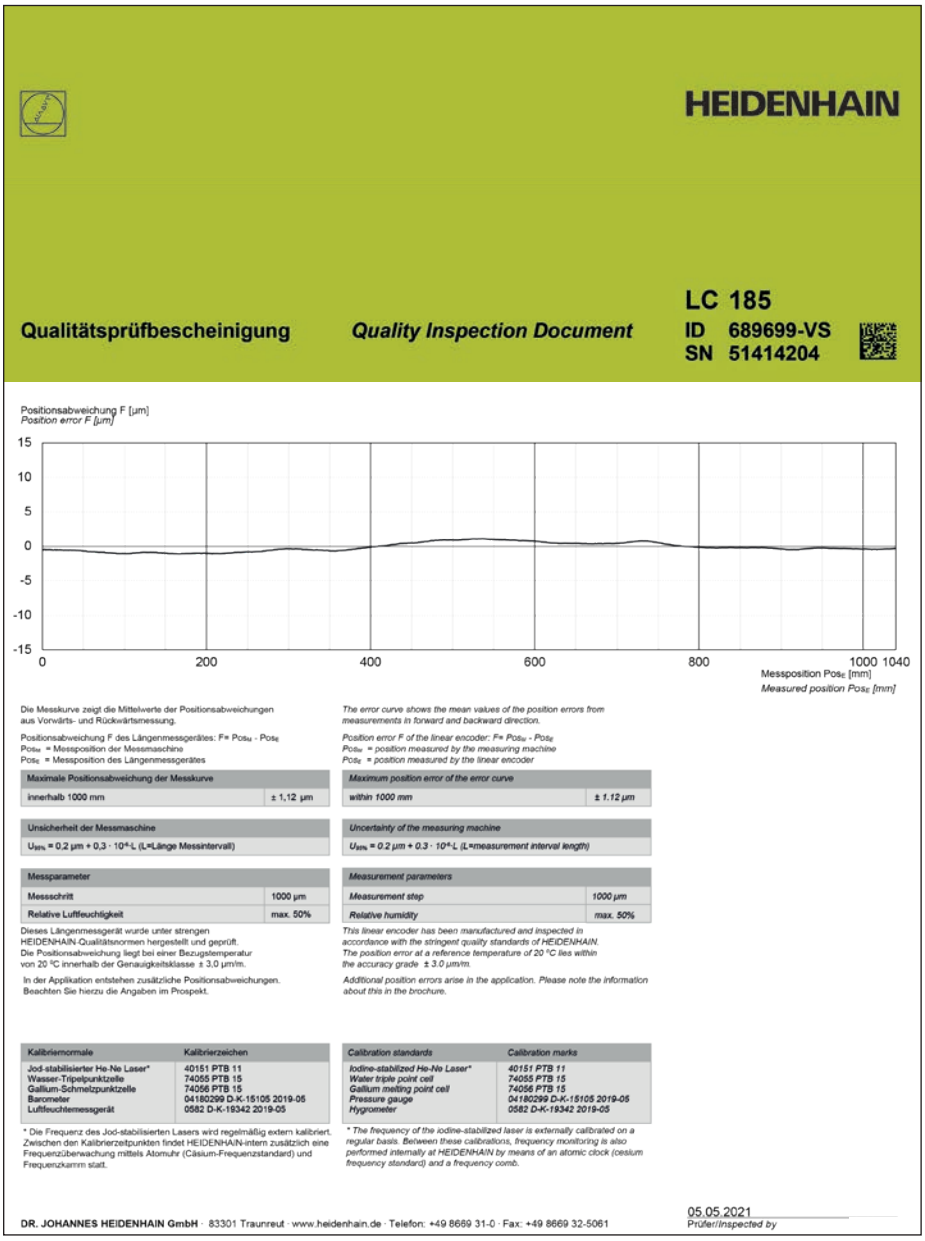

HEIDENHAIN

Qualitätsprüfbescheinigung *Quality Inspection Document*

LC 185
ID 689699-VS
SN 51414204

Positionsabweichung F [µm]
Position error F [µm]

Die Messkurve zeigt die Mittelwerte der Positionsabweichungen aus Vorwärts- und Rückwärtsmessung.

Positionsabweichung F des Längenmessgerätes: F= Pos$_{lM}$ - Pos$_{lE}$
Pos$_{lM}$ = Messposition der Messmaschine
Pos$_{lE}$ = Messposition des Längenmessgerätes

The error curve shows the mean values of the position errors from measurements in forward and backward direction.

Position error F of the linear encoder: F= Pos$_{lM}$ - Pos$_{lE}$
Pos$_{lM}$ = position measured by the measuring machine
Pos$_{lE}$ = position measured by the linear encoder

Maximale Positionsabweichung der Messkurve	
innerhalb 1000 mm	± 1,12 µm

Maximum position error of the error curve	
within 1000 mm	*± 1.12 µm*

Unsicherheit der Messmaschine
$U_{95\%}$ = 0,2 µm + 0,3 · 10^{-6}·L (L=Länge Messintervall)

Uncertainty of the measuring machine
$U_{95\%}$ = 0.2 µm + 0.3 · 10^{-6}·L (L=measurement interval length)

Messparameter	
Messschritt	1000 µm
Relative Luftfeuchtigkeit	max. 50%

Measurement parameters	
Measurement step	*1000 µm*
Relative humidity	*max. 50%*

Dieses Längenmessgerät wurde unter strengen HEIDENHAIN-Qualitätsnormen hergestellt und geprüft. Die Positionsabweichung liegt bei einer Bezugstemperatur von 20 °C innerhalb der Genauigkeitsklasse ± 3,0 µm/m.

In der Applikation entstehen zusätzliche Positionsabweichungen. Beachten Sie hierzu die Angaben im Prospekt.

This linear encoder has been manufactured and inspected in accordance with the stringent quality standards of HEIDENHAIN. The position error at a reference temperature of 20 °C lies within the accuracy grade ± 3.0 µm/m.

Additional position errors arise in the application. Please note the information about this in the brochure.

Kalibriermormale	Kalibrierzeichen
Jod-stabilisierter He-Ne Laser*	40151 PTB 11
Wasser-Tripelpunktzelle	74055 PTB 15
Gallium-Schmelzpunktzelle	74056 PTB 15
Barometer	04180299 D-K-15105 2019-05
Luftfeuchtemessgerät	0582 D-K-19342 2019-05

Calibration standards	*Calibration marks*
*Iodine-stabilized He-Ne Laser**	*40151 PTB 11*
Water triple point cell	*74055 PTB 15*
Gallium melting point cell	*74056 PTB 15*
Pressure gauge	*04180299 D-K-15105 2019-05*
Hygrometer	*0582 D-K-19342 2019-05*

* Die Frequenz des Jod-stabilisierten Lasers wird regelmäßig extern kalibriert. Zwischen den Kalibrierzeitpunkten findet HEIDENHAIN-intern zusätzlich eine Frequenzüberwachung mittels Atomuhr (Cäsium-Frequenzstandard) und Frequenzkamm statt.

** The frequency of the iodine-stabilized laser is externally calibrated on a regular basis. Between these calibrations, frequency monitoring is also performed internally at HEIDENHAIN by means of an atomic clock (cesium frequency standard) and a frequency comb.*

05.05.2021
Prüfer/*Inspected by*

DR. JOHANNES HEIDENHAIN GmbH · 83301 Traunreut · www.heidenhain.de · Telefon: +49 8669 31-0 · Fax: +49 8669 32-5061

Example

Mechanical design types and mounting guidelines
Slimline linear encoders

The LC and LS slimline linear encoders should be mounted on a machined surface over the entire length—particularly when high dynamic performance is required. Larger measuring lengths and a higher vibration load capacity can be achieved by using a mounting spar or clamping elements (applies only to the LC 400 series).

These slimline linear encoders have mutually identical mounting dimensions, thereby allowing an incremental LS to be mounted in place of an absolute LC. In addition, the same mounting spars can be used, regardless of the encoder variant.

The encoder is mounted such that the sealing lips are directed downward or away from the splash water (see also "General information" on page 18).

Thermal behavior
Due to their rigid fastening with two M8 screws, these linear encoders largely adapt themselves to the mounting surface. When fastened via the mounting spar, the encoder is fixed at its midpoint to the mounting surface. The flexible fastening elements ensure reproducible thermal behavior.

Mounting
Sealed linear encoders from HEIDENHAIN are easy to mount: The scale unit needs to be aligned relative to the guideway at only a few points, such as at stop surfaces or stop pins. The shipping brace establishes the proper gap between the scale unit and the scanning unit, as well as the lateral tolerance. If the shipping brace needs to be removed before mounting due to a lack of space, then the mounting gauge can be used to easily set the exact gap between the scale unit and the scanning unit. Lateral tolerances must also be maintained.

LC 415
LC 416

LS 487

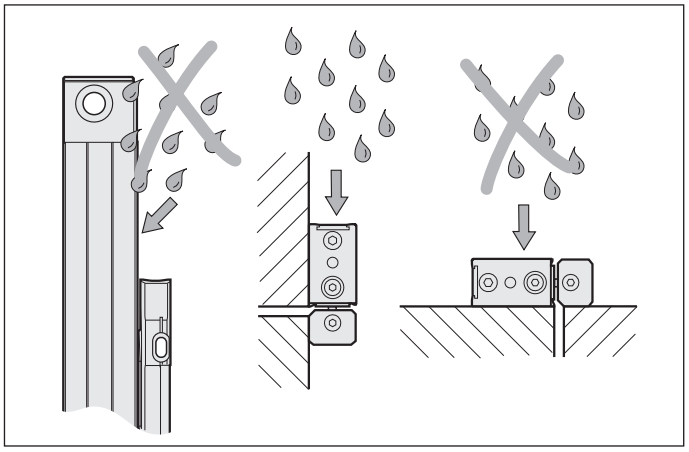

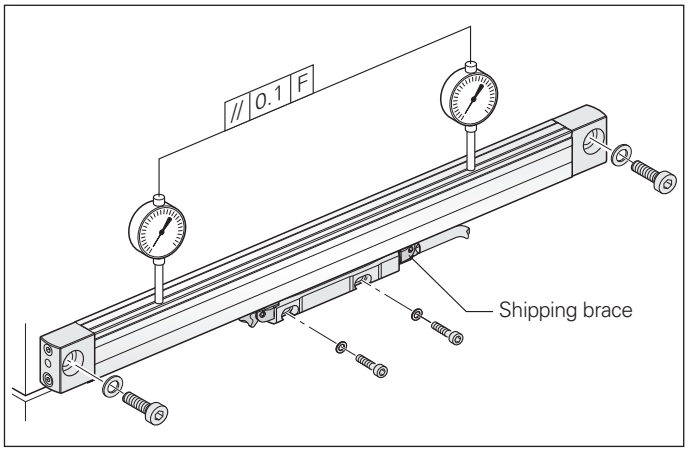

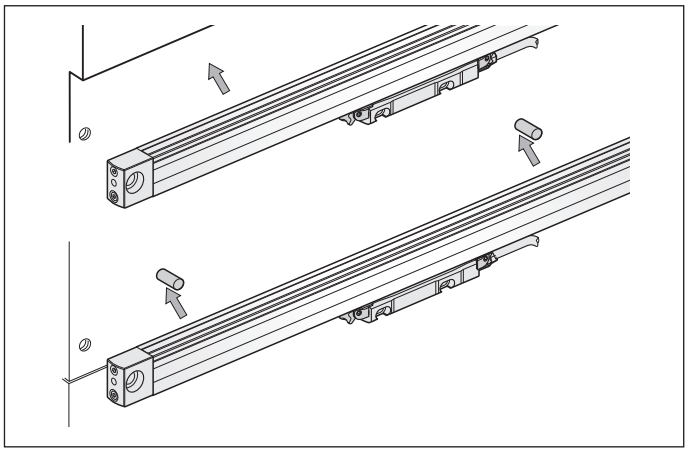

Accessories:
Mounting and test gauges for slimline linear encoders
The **mounting gauge** is used to set the gap between the scale unit and the scanning unit if the shipping brace needs to be removed before mounting. The **test gauges** are used to quickly and easily check the gap of the mounted linear encoder.

Along with the standard procedure of using two M8 screws to mount the scale unit onto a plane surface, there are also other mounting options:

Installation with mounting spar
Mounting the encoder with a mounting spar can be especially beneficial. The mounting spar can be fastened as part of the machine assembly process. The encoder is then simply clamped on during final mounting. This also enables easy replacement in the event of servicing. HEIDENHAIN recommends mounting with the mounting spar for measuring lengths greater than 620 mm when high dynamic performance is required. The mounting spar is always required for measuring lengths greater than 1240 mm.

For the **MSL 41 mounting spar**, the components required for clamping are already preassembled. This mounting spar is suitable for linear encoders with normal or short end blocks. To ensure the choice between a cable outlet to the left or the right, the LC 400 and LS 4x7 encoder series can be mounted on either side. The MSL 41 mounting spar must be ordered separately.

The **mounting aid** is locked onto the mounted spar and therefore simulates an optimally mounted scanning unit. The customer's element onto which the scanning unit is fastened can be easily aligned relative to the mounting aid. Then the mounting aid is replaced by the linear encoder.

Accessories:
MSL 41 mounting spar
ID 770902-xx

Mounting aid for scanning unit
ID 753853-01

Mounting with clamping elements
If the cable outlet is to the right, then the LC 400 scale unit fastened to the end blocks can be additionally affixed by means of clamping elements. This eliminates the need for a mounting spar for measuring lengths greater than 620 mm.

Accessory:
Clamping elements
With pin and M5x10 screw
ID 556975-01 (10 per package)

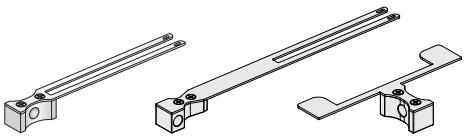

	ID		
Mounting gauge 1.0 mm (gray)	737748-01	1211268-01	1211239-01
Test gauge max. 1.3 mm (red)	737748-02	1211268-02	1211239-02
Test gauge min. 0.7 mm (blue)	737748-03	1211268-03	1211239-03

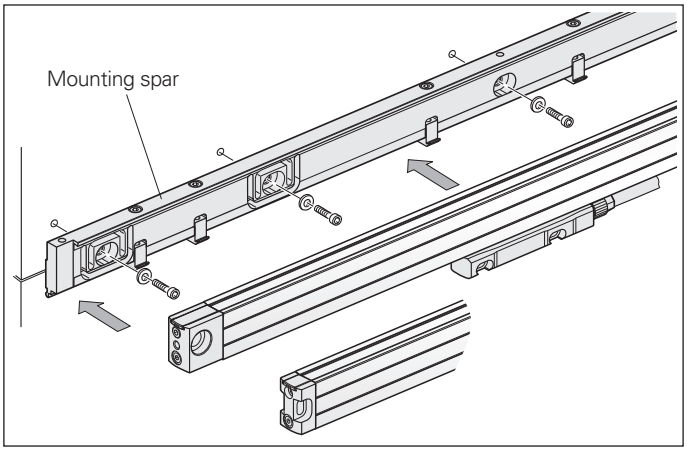

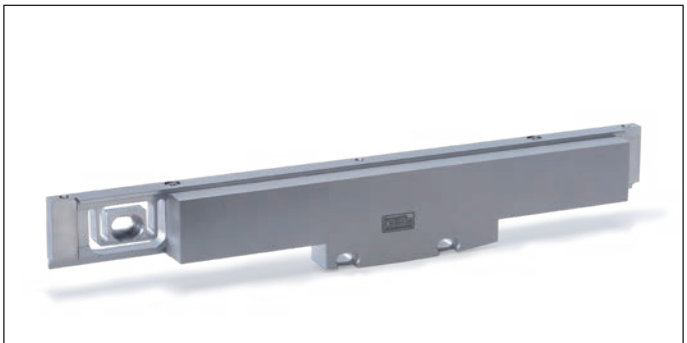

Mounting aid fastened to a mounting spar

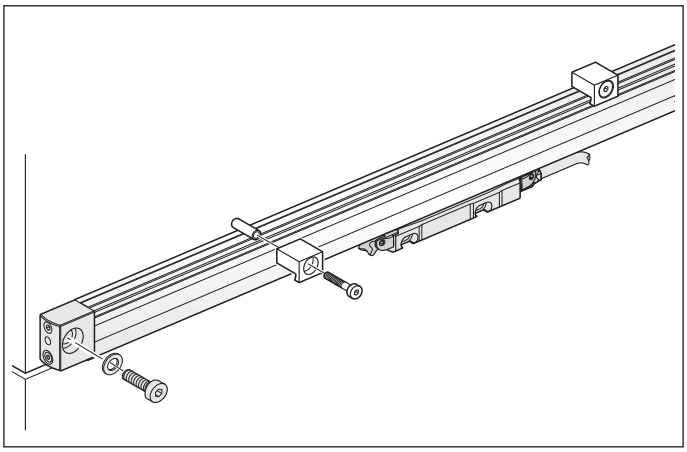

Full-size linear encoders

The LB, LC, and LS full-size linear encoders are fastened over their entire length onto a machined surface. This gives them **high resistance to vibration**. The angled configuration of the sealing lips permits **universal mounting** with vertical or horizontal scale housings while providing the same protection rating.

The LC 1x5 features an optimized sealing design with two successive pairs of sealing lips. When purified compressed air is used for the scale housing, it creates highly effective purge air between the two pairs of sealing lips. This optimally protects the interior of the encoder from contamination.

The flow rate is set through a connecting piece with a flow regulator (see separate accessories on page 18).

Thermal behavior
The LB, LC, and LS 100 full-size linear encoders are optimized with regard to their thermal behavior.

For the multi-section **LC 200** and **LB**, the steel scale tape is clamped directly onto the machine element. The encoders are thereby subject to the same thermally induced length changes as the mounting surface.

The **LC** and **LS** are fixed to the mounting surface at their midpoint. The flexible fastening elements permit reproducible thermal behavior.

Mounting
Sealed linear encoders from HEIDENHAIN are easy to mount: The scale unit needs to be aligned relative to the guideway at only a few points, such as at stop surfaces or stop pins. The shipping brace already establishes the proper gap between the scale unit and the scanning unit. The lateral gap must be set during mounting. If the shipping brace needs to be removed before mounting due to a lack of space, then the mounting gauge can be used to easily set the exact gap between the scale unit and the scanning unit. Lateral tolerances must also be maintained.

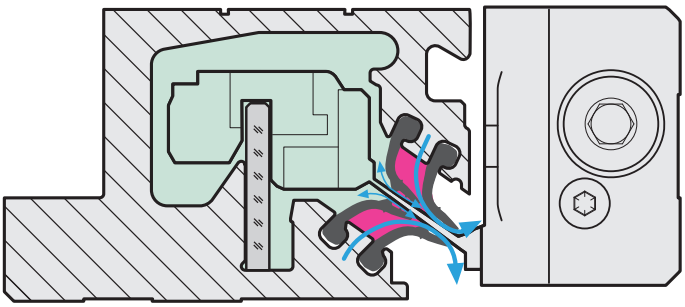

Sealing design for the LC 1x5

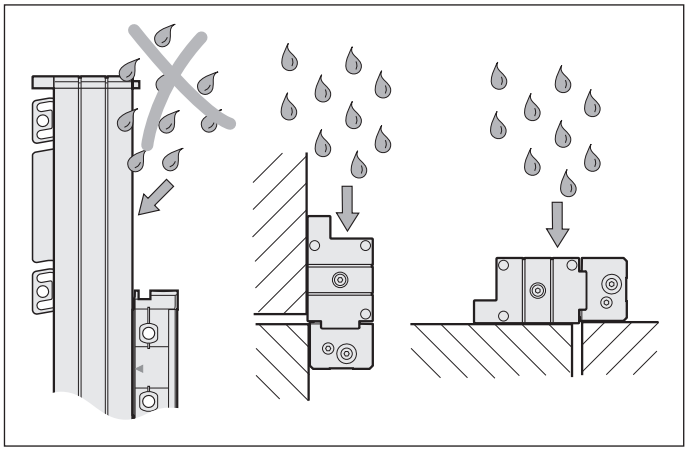

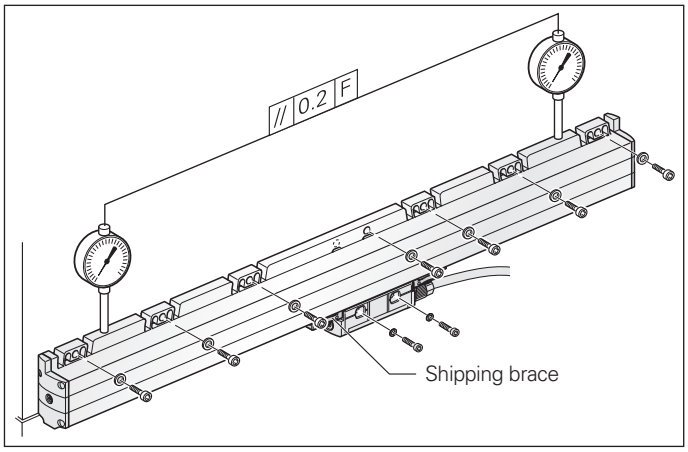

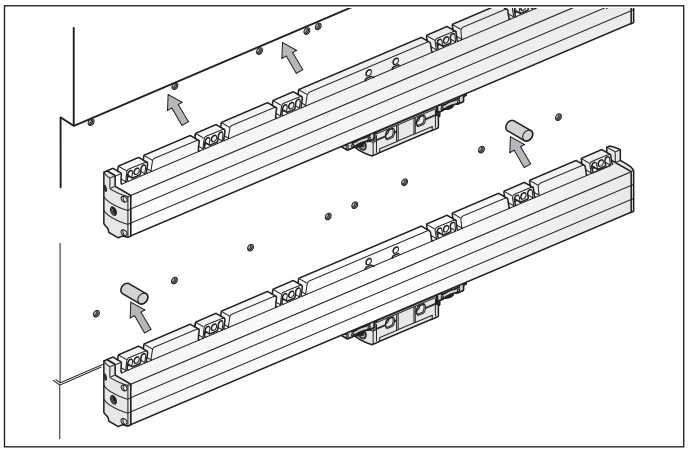

Mounting the multi-section LC 2x1 and LB 383
The LC 2x1 and LB 383 with measuring lengths greater than 3240 mm are mounted to the machine in sections as follows:

- Mount and align the housing sections.
- Draw the scale tape through the entire length and tighten it.
- Lubricate the sealing lips and draw them through.
- Insert the scanning unit.

Adjusting the tension of the scale tape enables linear machine error compensation of up to ±100 µm/m.

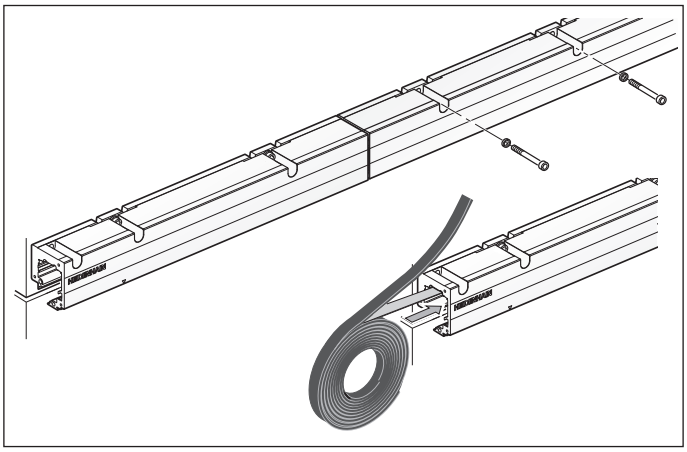

Accessories:
Mounting aids

For LC 1x3, LS 1x7	ID 547793-02
For LC 100	ID 1067589-02
For LC 2x1, LB 383	ID 824039-01

The mounting aid locks onto the scale unit, thereby simulating an optimally adjusted scanning unit. The customer's element onto which the scanning unit is fastened can be easily aligned relative to the mounting aid. The mounting aid is then removed and the scanning unit is fastened to the mounting bracket.

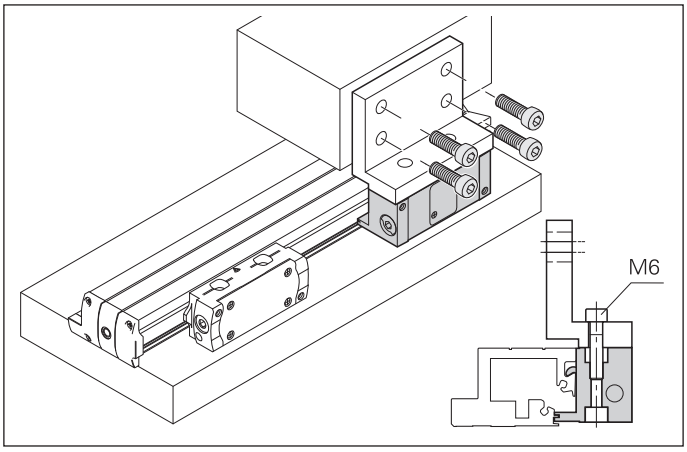

Example

Accessories:
Mounting and test gauges for full-size linear encoders

The **mounting gauge** is used to set the gap between the scale unit and the scanning unit if the shipping brace needs to be removed before mounting. The **test gauges** are used to quickly and easily check the gap of the mounted linear encoder.

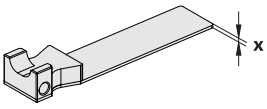

	LC 100, LS 100		LB 383/LC 2x1	
	x	**ID**	**x**	**ID**
Mounting gauge (gray)	1.5 mm	575832-11	1.0 mm	772141-11
Test gauge max. (red)	1.8 mm	575832-12	1.3 mm	772141-12
Test gauge min. (blue)	1.2 mm	575832-13	0.7 mm	772141-13

Accessory:
Lubricating device
For LC 2x1, LB 383 sealing lips
ID 1104590-05

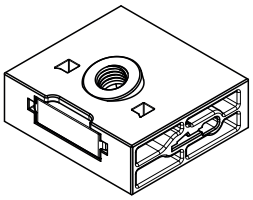

General information

Protection rating
Sealed **linear encoders** fulfill the requirements for IP53 or IP54 protection as per **EN 60529** and **IEC 60529** provided that they are mounted with the sealing lips facing away from splash water. If necessary, provide an additional protective cover for installation. If the encoder is exposed to high levels of dust or coolant mist, then purge air can be used to provide an IP64 protection rating, thereby more effectively protecting against contamination. For applying compressed air for the purpose of purge air, the LB, LC, and LS linear encoders are equipped with inlets at both end blocks of the scale and on the mounting block of the scanning unit.

The compressed air introduced directly into the encoders must be purified by a microfilter and must comply with the following quality classes as per **ISO 8573-1** (2010 edition):

- Solid contaminants: **Class 1**
  Particle size: Number of particles per m^3
  0.1 µm to 0.5 µm ≤ 20000
  0.5 µm to 1.0 µm ≤ 400
  1.0 µm to 5.0 µm ≤ 10
- Max. pressure dew point: **Class 4**
  (pressure dew point at 3 °C)
- Total oil content: **Class 1**
  (max. oil concentration 0.01 mg/m^3)

For an optimal supply of purge air to the sealed linear encoders, the required air flow is 7 liters per minute per encoder. Ideally, the air flow is regulated by the HEIDENHAIN connecting pieces with an integrated flow regulator. The flow regulators ensure the prescribed flow quantities at an input pressure of approx. $1 \cdot 10^5$ Pa (1 bar). On some encoders, the flow regulator is already integrated into the connector (see the information in the technical drawings).

Accessories:
Connecting piece with flow regulator
For compressed-air tube (6 mm x 1 mm):

For connecting to the linear encoder end block
ID 226270-02

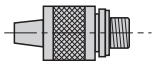

For connecting to the scanning unit
ID 275239-01

Can be additionally combined with ID 275239-01:
Swiveling screw fitting (90°)
With seal
ID 207834-02
(swivel screw fitting on full-size linear encoders can be connected only to the scale housing; cannot be used with the LC 200 and LB 383)

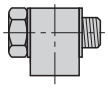

Accessory:
DA 400 compressed air unit
ID 894602-01

DA 400
HEIDENHAIN offers the DA 400 compressed-air filter system for purifying the compressed air. It is designed specifically for connecting compressed air to the encoders.

The DA 400 consists of three filter stages (prefilter, microfilter, and activated carbon filter) and a pressure regulator with a manometer. The manometer and pressure switch (available as an accessory) enable the effective monitoring of proper purge air functionality.

The compressed air channeled into the DA 400 must fulfill the requirements of the following purity classes as per **ISO 8573-1** (2010 edition):

- Solid contaminants: **Class 5**
  Particle size: Number of particles per m^3
  0.1 µm to 0.5 µm Not specified
  0.5 µm to 1.0 µm Not specified
  1.0 µm to 5.0 µm ≤ 100000
- Max. pressure dew point: **Class 6**
  (pressure dew point at 10 °C)
- Total oil content: **Class 4**
  (max. oil concentration: 5 mg/m^3)

DA 400

Further information:
For further information, ask for our *DA 400* Product Information document.

Mounting
To simplify cable routing, the mounting block of the scanning unit is usually mounted to the stationary machine part, while the scale housing is mounted to the moving machine part. The **mounting location** for the linear encoders should be carefully considered in order to ensure both optimum accuracy and the longest possible service life.

- The encoder should be mounted as closely as possible to the working plane to keep the Abbe error low.
- To function properly, linear encoders should not be continuously exposed to strong vibration. The mounting surface should therefore be on solid machine elements. Mounting onto hollow parts, small intermediary elements, etc., should be avoided. For the slimline sealed linear encoders, the variants with a mounting spar are recommended.
- In order to avoid temperature effects, the linear encoders should not be mounted in close proximity to heat sources.
- During cable routing, the minimum bend radius for fixed installation or for frequent flexing must be complied with (see table).
- Both the scanning unit and the scale housing are to be connected with low resistance (< 1 Ω) to functional earth.

Cable assembly
Accessory:
1/4" socket wrench
The socket wrench makes it possible to mount the encoder connector to the adapter cable when space is limited.
ID 618965-02

Required moving force
The required moving force stated is the maximum force required to move the scale unit relative to the scanning unit.

Acceleration
Linear encoders are subject to various types of acceleration during operation and mounting.

- The abovementioned extreme values for the **vibration tolerance** apply to frequencies of 55 Hz to 2000 Hz **(EN 60068-2-6)**, except when mechanical resonances occur. **Comprehensive testing of the entire system is therefore required.**
- The maximum permissible acceleration values (semi-sinusoidal shock) for **shock and impact** are valid for 11 ms **(EN 60068-2-27).** Under no circumstances should a hammer or similar implement be used to adjust or position the encoder.

RoHS
HEIDENHAIN has tested its products to ensure the use of non-hazardous materials in accordance with the European Directives 2002/95/EC (RoHS) and 2002/96/EC (WEEE). For a Manufacturer's Declaration on RoHS, please consult your sales agency.

Parts subject to wear
Encoders from HEIDENHAIN are designed for a long service life. Preventive maintenance is not required. However, they do contain components that are subject to wear depending on the application and how they are deployed. This especially applies to cables that are subject to frequent flexing.

Other parts subject to wear are the bearings in encoders with integral bearing, the radial shaft seal rings in rotary encoders and angle encoders, and the sealing lips on sealed linear encoders.

System tests
Encoders from HEIDENHAIN are usually integrated as components into complete systems. Applications of this type require **detailed testing of the complete system**, regardless of the encoder's specifications.

The specifications stated in this brochure apply to the specific encoder, not to the complete system. Any operation of the encoder outside of the specified range or outside of its proper and intended use is at the user's own risk.

Mounting
The steps and dimensions that must be complied with during mounting are specified solely in the mounting instructions supplied with the device. All mounting-related information in this brochure is therefore provisional and non-binding; it does not become part of a contract.

Further information:

Please also comply with the following documents for planning and mounting:

- Brochure: *Cables and Connectors*
- Brochure: *Interfaces of HEIDENHAIN Encoders*
- Mounting instructions for the respective encoder
- Mounting instructions for encoder cables and adapter cables

Ø	Ø 3.7 mm	Ø 4.5 mm	Ø 6.0 mm Ø 6.8 mm	Ø 6.6 mm Ø 10 mm	Ø 8.0 mm
R, R T ≥ –40 °C	≥ 8 mm	≥ 10 mm	≥ 20 mm	≥ 35 mm	R_1 ≥ 40 mm
R, R T ≥ –10 °C R	≥ 40 mm	≥ 50 mm	≥ 75 mm	≥ 75 mm	R_2 ≥ 100 mm

Minimum bend radii for rigid configuration or for frequent flexing

Functional safety

Safe axes
Driven axes on machine tools generally pose a significant hazard for humans. It must be ensured that the machine does not make any uncontrolled movements, especially when a person is interacting with it (e.g., during workpiece setup). This requires position information about the axes in order for a safety function to be implemented. As an evaluating safety module, the control must be able to detect faulty position information and react accordingly.

Various safety strategies can be pursued depending on the topology of the axis and the evaluation capabilities of the controller. In a single-encoder system, for example, only one encoder per axis is evaluated for the safety function. However, on axes with two encoders, such as a linear axis with a rotary and a linear encoder, the two redundant position values can be compared with each other in the control.
Safe fault detection can be ensured only if the two components (the control and encoder) are properly matched to each other. Please note that the safety designs of control manufacturers differ from one another. As a result, the requirements to be fulfilled by the connected encoders may partially differ as well.

Type-examined encoders
Sealed linear encoders from HEIDENHAIN are used successfully on a variety of controls in widely differing safety designs. Prime examples are the type-examined LC 100/ LC 400 encoders with the EnDat and DRIVE-CLiQ interfaces. These encoders can be operated as single-encoder systems in conjunction with a suitable controller in applications with the controller category SIL 2 (as per EN 61508) or performance level "d" (as per EN ISO 13849). Unlike incremental encoders, the absolute encoders always provide a safe absolute position value, including immediately after switch-on or a power failure. Reliable position transmission is based on two independently generated absolute position values and on error bits provided to the safe control. The purely serial data transmission also provides other benefits, including greater reliability, improved accuracy, diagnostic capabilities, and reduced costs through simpler connection technology.

Standard encoders
In addition to those encoders explicitly qualified for safety applications, standard encoders (e.g., with Fanuc interface or 1 V_{PP} signals) can also be used in safe axes. In such cases, the characteristics of the encoders must be matched to the requirements of the respective control. For this purpose, HEIDENHAIN can provide additional data about the individual encoders (failure rate, fault model as per EN 61800-5-2).

Service life
Unless otherwise specified, HEIDENHAIN encoders are designed for a service life of 20 years (as per ISO 13849).

Further information:
The safety-related characteristic values are listed in the encoder specifications. These characteristic values are explained in the *Safety-Related Position Encoders* Technical Information document.
For the use of standard encoders in safety-related applications, HEIDENHAIN can also provide additional information about individual products (failure rate, fault model as per EN 61800-5-2).

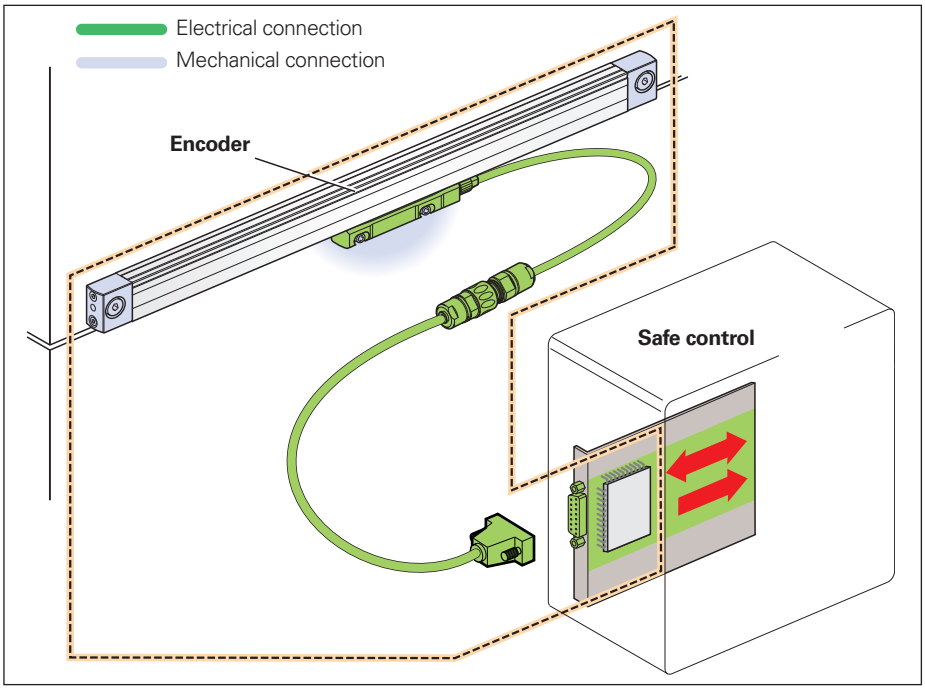

Encoder with mechanical connection and electrical interface

DRIVE-CLiQ is a registered trademark of SIEMENS AG.

Safe position
The safe position refers to the amount of position deviation at which an error can be reliably detected. The characteristic value refers to the position value in fault-free operation and is given in the encoder's unit of measure. It significantly influences the minimum distance required to provide protection against pinching (e.g., of fingers). The safe position is divided into the values for the encoder and for the mechanical coupling. The value for the encoder describes the maximum position offset, including the influence of the position value comparison in the control, and contains quantization errors as well as position errors that may arise in the encoder. Depending on the control and the application, the parameter "safety-relevant measuring step" may also be relevant for the parameterization of the safety function. The control documentation includes a corresponding note in such cases.

The parameter "mechanical coupling" provides information on a fault involving the loosening of the mechanical connection. In table D8 of the standard for electrical power drive systems (EN 61800-5-2), the loosening of the mechanical connection between the encoder and the drive system is listed as a fault that requires consideration. Since it cannot be guaranteed that the control will detect such errors, fault exclusion is required for this in many cases. If fault exclusion is required in the control's operating instructions, then the information for the safe mechanical connection is to be taken into account. Otherwise it can be ignored.

For a friction-type connection with fault exclusion there is no additional mechanical offset that would need to be considered for the safe position. If the fault exclusion is fulfilled only by a mechanical stop with backlash, then this maximum possible offset is to be taken into account when calculating the safe position. This is done by adding the values for the encoder and for the mechanical coupling.

The requirements on fault exclusion can result in additional constraints in the permissible limit values in the specifications. In addition, fault exclusions for the loosening of the mechanical coupling usually require additional measures during installation of the encoder or in the event of servicing (e.g., anti-rotation lock for screws). These factors must be considered for the selection of a suitable encoder or mounting option.

Fault exclusion for the LC 100 and LC 400 series
There are various mounting options for the LC 100/LC 400 encoders that offer fault exclusion for the loosening of the mechanical connection. The fault exclusion applies to all LC 4x5 / LC 4x6 and LC 1x5 / LC 1x6 encoders, regardless of the interface.

Further information:
For proper use of the encoder, the information in the product-specific operating instructions must be complied with.

	Mounting	Fastening[2]	Safe position for the mechanical connection[1]	Limitation of specifications
LC 1x5 **LC 1x6**				
Housing		M6 ISO 4762 8.8/A70	±0 µm	No
Scanning unit	Mounting options I and II	M6 ISO 4762 8.8/A70	±0 µm	No
LC 4x5 **LC 4x6**				
Housing	Mounting option I 12A end blocks for M8	M8 ISO 4762 8.8/A70 M8 DIN 6912 8.8	±0 µm	No
	Mounting option III MSL 41 mounting spar ID 770902-xx	M6 ISO 4762 8.8/A70	±0 µm	For acceleration of up to 60 m/s^2 in the direction of measurement
Scanning unit	All mounting options	M6 ISO 4762 8.8/A70	±0 µm	No

All of the information provided on screw connections assumes a mounting temperature of 15 °C to 35 °C.
[1] Fault exclusions are given only for the explicitly mentioned mounting options
[2] A suitable anti-rotation lock must be used for the screw connections (in the case of mounting/servicing)

LC 400 series

Absolute linear encoders with slimline scale housing

- **Low installation space requirements**

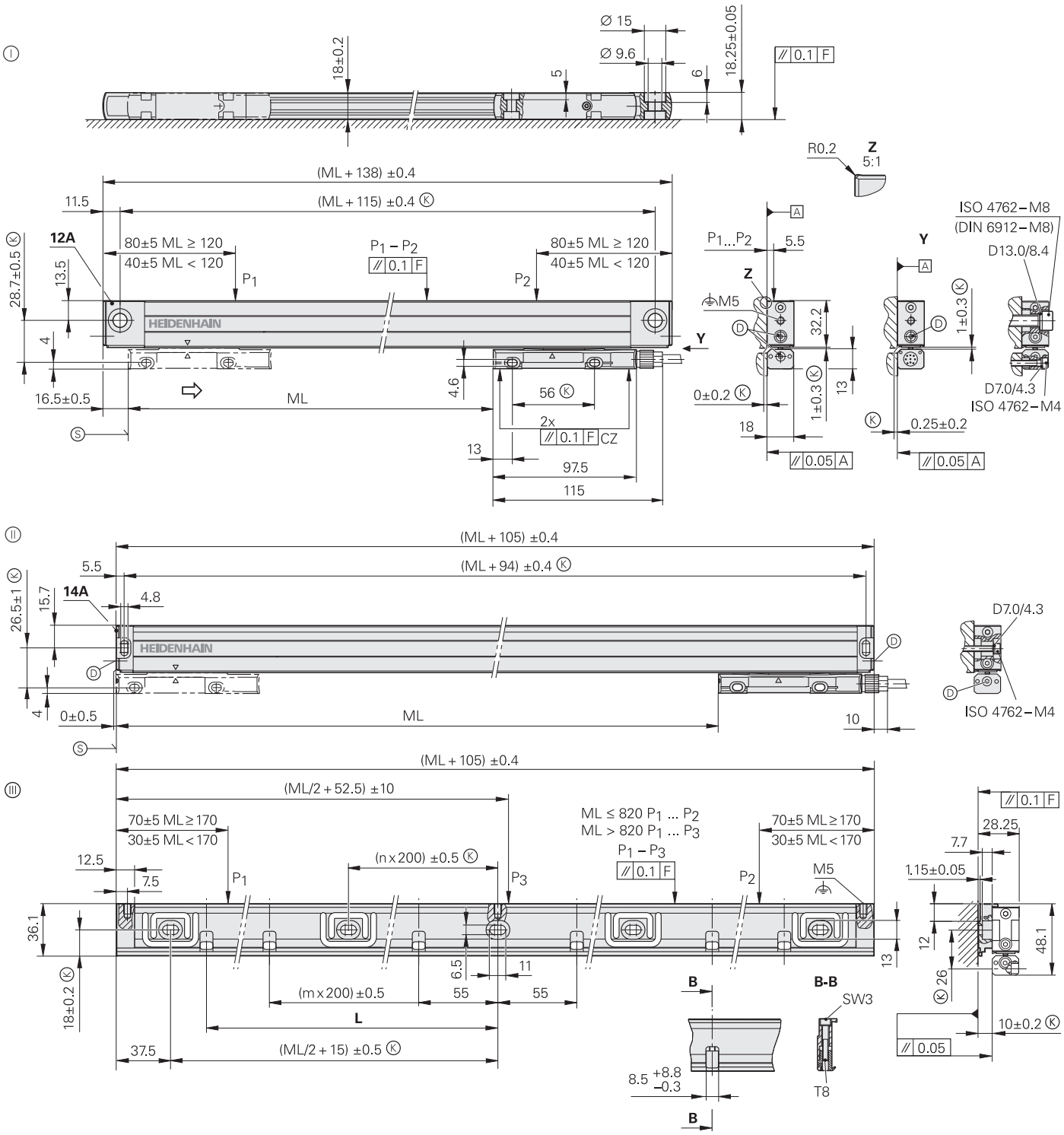

ML	70	120	170	220	270	320	370	420	470	520	570	620	670	720	770	820	920	1020	1140	1240	1340	1440	1540	1640	1740	1840	2040
L	37.5	55	75	100	115	140	175	200	225	250	275	300	325	350	375	400	450	500	555	610	655	710	760	810	855	910	1010

mm

Tolerancing ISO 8015
ISO 2768:1989-mH
≤ 6 mm: ±0.2 mm

Ⓘ = 12A end block; for mounting with and without mounting spar
Ⓘⓘ = 14A end block; for mounting with mounting spar
(if directly fastened with M4 screws, then specifications are subject to constraints)
Ⓘⓘⓘ = MSL 41 mounting spar
F = Machine guideway
P = Measuring points for alignment
Ⓚ = Required mating dimensions
Ⓓ = Compressed air inlet
Ⓢ = Beginning of measuring length (ML) (= 20 mm absolute)
⇨ = Direction of motion of the scanning unit for ascending position values

Specifications	LC 415 Functional Safety	LC 415	LC 485
Measuring standard Coefficient of linear expansion	DIADUR glass scale with absolute track and incremental track; grating period: 20 µm $\alpha_{therm} \approx 8 \cdot 10^{-6}\ K^{-1}$ (mounting type ①/⑪); with mounting spar: $\alpha_{therm} \approx 9 \cdot 10^{-6}\ K^{-1}$ (mounting type ⑪)		
Accuracy grade*	±3 µm, ±5 µm (typical interpolation error: ±20 nm)		
Measuring length (ML)* in mm	Mounting spar* or clamping elements* optional up to ML 1240; necessary for ML 1340 or greater 70 120 170 220 270 320 370 420 470 520 570 620 670 720 770 820 920 1020 1140 1240 1340 1440 1540 1640 1740 1840 2040		
Functional safety for applications with up to	• SIL 2 as per EN 61508 (further basis for testing: IEC 61800-5-3) • Category 3, PL d as per EN ISO 13849-1	–	
PFH (per axis)	$\leq 15 \cdot 10^{-9}$ (up to 2000 m above sea level)	–	
Safe position[1]	Encoder: ±550 µm (safe measuring step (SM) = 220 µm)	–	
	Mechanical connection: fault exclusions for loosening of the housing and scanning unit (page 21)		
Interface	EnDat 2.2		
Ordering designation	EnDat22		EnDat02
Measuring step At ±3 µm At ±5 µm	0.001 µm 0.010 µm		0.005 µm 0.010 µm
Clock frequency (calc. time t_{cal})	≤ 16 MHz (≤ 5 µs)		≤ 2 MHz (≤ 5 µs)
Measurement of direct-drive motor temperature[2]	With EIB 5211 or EIB 5181		With EIB 5281 or EIB 5181
Incremental signals	–		∿ 1 V_{PP} (20 µm)
Cutoff frequency –3 dB	–		≥ 150 kHz
Electrical connection	Separate adapter cable (1 m / 3 m / 6 m / 9 m) connectable on mounting block		
Cable length	≤ 100 m[3]		≤ 150 m[3]
Supply voltage	DC 3.6 V to 14 V		
Power consumption (maximum)	3.6 V: ≤ 1.1 W; 14 V: ≤ 1.3 W		
Traversing speed	≤ 180 m/min (max. acceleration in the direction of measurement ≤ 100 m/s^2)		
Required moving force	≤ 5 N		
Vibration 55 Hz to 2000 Hz acting on **Shock** 11 ms	Scanning unit: ≤ 200 m/s^2 (EN 60068-2-6) Housing without mounting spar: ≤ 100 m/s^2 (EN 60068-2-6) Housing with mounting spar; cable outlet on the right: ≤ 150 m/s^2, or left: ≤ 100 m/s^2 (EN 60068-2-6) ≤ 300 m/s^2 (EN 60068-2-27)		
Operating temperature	0 °C to 50 °C		
Protection EN 60529[4]	IP53 when installed in conformity with instructions in the brochure; IP64 with sealing air via DA 400		
Mass	Encoder: 0.2 kg + 0.55 kg/m of measuring length; mounting spar: 0.9 kg/m		

* Please select when ordering; [1] Further tolerances may arise in the downstream electronics after position value comparison (contact mfr. of downstream electronics); [2] Depending on the serial number index of the encoder; please consult HEIDENHAIN; [3] With HEIDENHAIN cable (see the *Interfaces of HEIDENHAIN Encoders* brochure); [4] In the application, protect the LC from the ingress of particles and liquids

LC 400 series

Absolute linear encoders with slimline scale housing

- **Low installation space requirements**

Specifications	**LC 495 S** Functional Safety	**LC 495 S**
Measuring standard Coefficient of linear expansion	DIADUR glass scale with absolute track and incremental track; grating period: 20 µm $\alpha_{therm} \approx 8 \cdot 10^{-6}\ K^{-1}$ (mounting option ①/⑪); with mounting spar: $\alpha_{therm} \approx 9 \cdot 10^{-6}\ K^{-1}$ (mounting option ⑪)	
Accuracy grade*	±3 µm, ±5 µm (typical interpolation error: ±20 nm)	
Measuring length (ML)* in mm	Mounting spar* or clamping elements* optional up to ML 1240, required with ML 1340 or longer 70 120 170 220 270 320 370 420 470 520 570 620 670	
Functional safety for applications with up to	• SIL 2 as per EN 61508 • Category 3, PL d as per EN ISO 13849-1	–
PFH (per axis)	$\leq 25 \cdot 10^{-9}$ (up to 1000 m above sea level)	–
Safe position[1]	Encoder: ±550 µm (safe measuring step (SM) = 220 µm)	–
	Mechanical connection: fault exclusions for loosening of the housing and scanning unit (page 21)	
Interface	DRIVE-CLiQ	
Ordering designation	DQ01	
Measuring step At ±3 µm At ±5 µm	 0.001 µm 0.010 µm	
Clock frequency (calculation time t_{cal})	–	
Measurement of direct-drive motor temperature[2]	–	
Electrical connection	Separate adapter cable (1 m / 3 m / 6 m / 9 m) connectable on mounting block	
Cable length	≤ 30 m[3]	
Supply voltage	DC 10 V to 28.8 V	
Power consumption (maximum)	10 V: ≤ 1.5 W; 28.8 V: ≤ 1.7 W	
Traversing speed	≤ 180 m/min (max. acceleration in the direction of measurement ≤ 100 m/s²)	
Required moving force	≤ 5 N	
Vibration 55 Hz to 2000 Hz acting on **Shock** 11 ms	Scanning unit: ≤ 200 m/s² (EN 60068-2-6) Housing without mounting spar: ≤ 100 m/s² (EN 60068-2-6) Housing with mounting spar; cable outlet on the right: ≤ 150 m/s², or left: ≤ 100 m/s² (EN 60068-2-6) ≤ 300 m/s² (EN 60068-2-27)	
Operating temperature	0 °C to 50 °C	
Protection EN 60529[4]	IP53 when installed as per the instructions in the brochure; IP64 with sealing air from DA 400	
Mass	Encoder: 0.2 kg + 0.55 kg/m of measuring length; mounting spar: 0.9 kg/m	

* Please select when ordering
1) Further tolerances may arise in the downstream electronics after position value comparison (contact mfr. of downstream electronics)
2) Depending on the serial number index of the encoder; please consult HEIDENHAIN
3) Greater cable lengths upon request
4) In the application, protect the LC from the ingress of particles and liquids

	LC 495 F	LC 495 M	LC 495 P
	720 770 820 920 1020 1140	1240 1340 1440 1540 1640 1740	1840 2040
	Fanuc Serial Interface/αi interface	Mitsubishi high speed interface	Panasonic Serial Interface
	Fanuc05	Mit03-04	Pana01
	αi interface/α interface 0.00125 µm/0.010 µm 0.0125 µm/0.050 µm	0.001 µm 0.010 µm	
	With EIB 5211	–	
	≤ 50 m	≤ 30 m	≤ 50 m
	DC 3.6 V to 14 V		
	3.6 V: ≤ 1.1 W; 14 V: ≤ 1.3 W		

LC 400 series (TRUE IMAGE TECHNOLOGY)

Absolute linear encoders with slimline scale housing

- **Low installation space requirements**

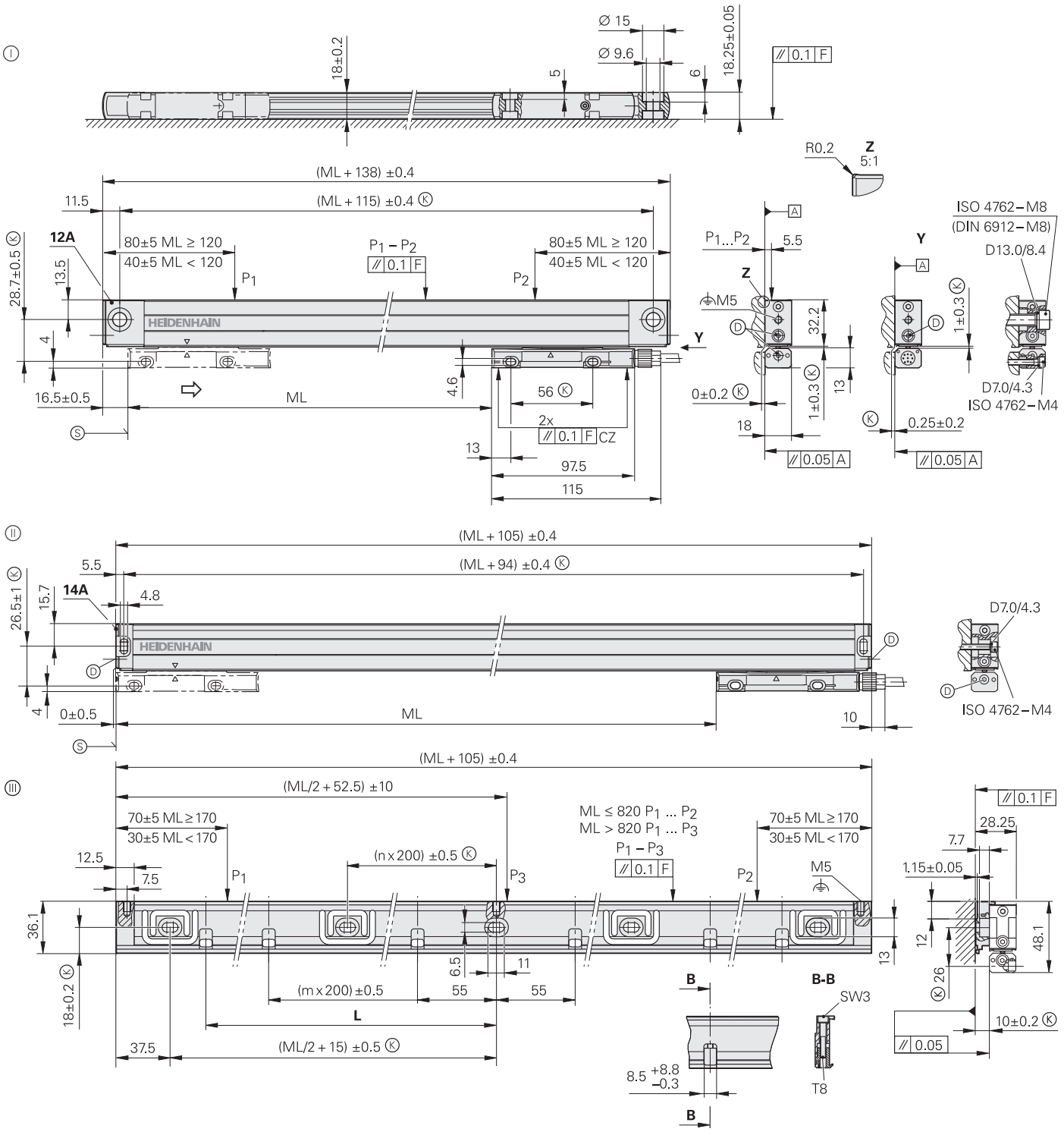

ML	70	120	170	220	270	320	370	420	470	520	570	620	670	720	770	820	920	1020	1140	1240	1340	1440	1540	1640	1740	1840	2040
L	37.5	55	75	100	115	140	175	200	225	250	275	300	325	350	375	400	450	500	555	610	655	710	760	810	855	910	1010

mm

Tolerancing ISO 8015
ISO 2768:1989-mH
≤ 6 mm: ±0.2 mm

Ⓘ = 12A end block; for mounting with and without mounting spar
Ⓘⓘ = 14A end block; for mounting with mounting spar
(if directly attached with M4 screws, then specifications are subject to constraints)
Ⓘⓘⓘ = MSL 41 mounting spar
F = Machine guideway
P = Measuring points for alignment
Ⓚ = Required mating dimensions
Ⓓ = Compressed air inlet with built-in flow regulator
Ⓢ = Beginning of measuring length (ML) (= 20 mm absolute)
⇨ = Direction of motion of the scanning unit for ascending position values

Specifications	LC 416 Functional Safety	LC 496 S Functional Safety
Measuring standard Coefficient of linear expansion	DIADUR glass scale with absolute track and incremental track; grating period: 27.5 µm $\alpha_{therm} \approx 8 \cdot 10^{-6}\ K^{-1}$ (mounting option Ⓘ/Ⓘ); with mounting spar: $\alpha_{therm} \approx 9 \cdot 10^{-6}\ K^{-1}$ (mounting option Ⓘ)	
Accuracy grade	±3 µm, ±5 µm (typical interpolation error: ±30 nm)	
Measuring length (ML)* in mm	Mounting spar* or clamping elements* optional up to ML 1240; necessary for ML 1340 or greater 70 120 170 220 270 320 370 420 470 520 570 620 670 720 770 820 920 1020 1140 1240 1340 1440 1540 1640 1740 1840 2040	
Functional safety for applications with up to	• SIL 2 as per EN 61508 (further basis for testing: IEC 61800-5-3) • Category 3, PL d as per EN ISO 13849-1	
PFH (per axis)	$\leq 20 \cdot 10^{-9}$ (up to 2000 m above sea level)	$\leq 30 \cdot 10^{-9}$ (up to 1000 m above sea level)
Safe position[1]	Encoder: ±4000 µm (safe measuring step (SM) = 220 µm)	
	Mechanical connection: fault exclusions for loosening of the housing and scanning unit (see "Functional safety")	
Interface	EnDat 2.2	DRIVE-CLiQ
Ordering designation	EnDat22	DQ01
Measuring step At ±3 µm At ±5 µm	0.001 µm 0.010 µm	
Clock frequency (calc. time t_{cal})	≤ 16 MHz (≤ 5 µs)	–
Measurement of direct-drive motor temperature	With EIB 5211 or EIB 5181	–
Electrical connection	Separate adapter cable (1 m / 3 m / 6 m / 9 m), connectable at either end of mounting block	
Cable length	≤ 100 m[2]	≤ 30 m[3]
Supply voltage	DC 3.6 V to 14 V	DC 10 V to 28.8 V
Power consumption (max.)	3.6 V: ≤ 1.1 W; 14 V: ≤ 1.3 W	10 V: ≤ 1.5 W; 28.8 V: ≤ 1.7 W
Traversing speed	≤ 180 m/min (max. acceleration in the direction of measurement ≤ 100 m/s²)	
Required moving force	≤ 5 N	
Vibration 55 Hz to 2000 Hz acting on **Shock** 11 ms	Scanning unit: ≤ 200 m/s² (EN 60068-2-6) Housing without mounting spar: ≤ 100 m/s² (EN 60068-2-6) Housing with mounting spar; cable outlet on the right: ≤ 150 m/s², or left: ≤ 100 m/s² (EN 60068-2-6) ≤ 300 m/s² (EN 60068-2-27)	
Operating temperature	0 °C to 50 °C	
Protection EN 60529[4]	IP54 when installed as per the mounting information in the brochure; IP64 with purge air (air purity class [3:4:2] as per ISO 8573-1:2010)	
Mass	Encoder: 0.2 kg + 0.55 kg/m of measuring length; mounting spar: 0.9 kg/m	

Due to optimized scanning, the encoders have only one pair of sealing lips.

* Please select when ordering
1) Further tolerances may arise in the downstream electronics after position value comparison (contact mfr. of downstream electronics)
2) With cable from HEIDENHAIN (see *Interfaces of HEIDENHAIN Encoders* brochure)
3) Greater cable lengths upon request
4) In the application, the LC must be protected from the ingress of particles. In addition, pollution degree 3 must be complied with in the micro-environment (see EN 60664-1).

LC 400 series (TRUE IMAGE TECHNOLOGY)

Absolute linear encoders with slimline scale housing

- **Low installation space requirements**

Specifications	**LC 496 F**
Measuring standard Coefficient of linear expansion	DIADUR glass scale with absolute track and incremental track; grating period: 27.5 µm $\alpha_{therm} \approx 8 \cdot 10^{-6}\ K^{-1}$ (mounting type Ⓘ/Ⓘ); with mounting spar: $\alpha_{therm} \approx 9 \cdot 10^{-6}\ K^{-1}$ (mounting type Ⓘ)
Accuracy grade	±3 µm, ±5 µm (typical interpolation error: ±30 nm)
Measuring length (ML)* in mm	Mounting spar* or clamping elements* up to ML 1240 optional; necessary for ML 1340 or greater 70 120 170 220 270 320 370 420 470 520 570 620 670
Functional safety for applications up to	–
PFH (per axis)	–
Safe position	–
	Mechanical connection: fault exclusions for loosening of the housing and scanning unit (see "Functional safety")
Interface	Fanuc Serial Interface/αi interface
Ordering designation	Fanuc05
Measuring step At ±3 µm At ±5 µm	αi interface/α interface 0.00125 µm/0.010 µm 0.0125 µm/0.050 µm
Clock frequency (calculation time t_{cal})	–
Measurement of direct-drive motor temperature	–
Electrical connection	Separate adapter cable (1 m / 3 m / 6 m / 9 m) connectable on mounting block
Cable length	≤ 50 m
Supply voltage	DC 3.6 V to 14 V
Power consumption (maximum)	3.6 V: ≤ 1.1 W; 14 V: ≤ 1.3 W
Traversing speed	≤ 180 m/min (max. acceleration in the direction of measurement ≤ 100 m/s^2)
Required moving force	≤ 5 N
Vibration 55 Hz to 2000 Hz acting on **Shock** 11 ms	Scanning unit: ≤ 200 m/s^2 (EN 60068-2-6) Housing without mounting spar: ≤ 100 m/s^2 (EN 60068-2-6) Housing with mounting spar; cable outlet on the right: ≤ 150 m/s^2, or left: ≤ 100 m/s^2 (EN 60068-2-6) ≤ 300 m/s^2 (EN 60068-2-27)
Operating temperature	0 °C to 50 °C
Protection class EN 60529[2)]	IP54 when installed as per the mounting information in the brochure; IP64 with purge air (air purity class [3:4:2] as per ISO 8573-1:2010)
Mass	Encoder: 0.2 kg + 0.55 kg/m of measuring length; mounting spar: 0.9 kg/m

* Please select when ordering
[1)] With cable from HEIDENHAIN (see *Interfaces of HEIDENHAIN Encoders* brochure)
[2)] In the application, the LC must be protected from the ingress of particles.
In addition, pollution degree 3 must be complied with in the micro-environment (see EN 60664-1).

	LC 496 M
	720 770 820 920 1020 1140 1240 1340 1440 1540 1640 1740 1840 2040
	Mitsubishi high speed interface
	Mit03-04
	0.001 µm 0.010 µm
	–
	–
	≤ 30 m

LC 100 series

Absolute linear encoders with full-size scale housing

- **High vibration tolerance**
- **Flat-lying installation possible**
- **High reliability through double sealing lips**

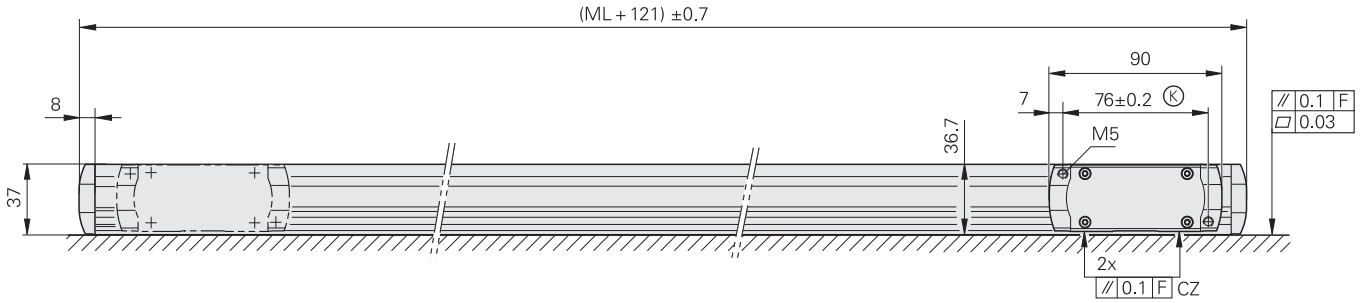

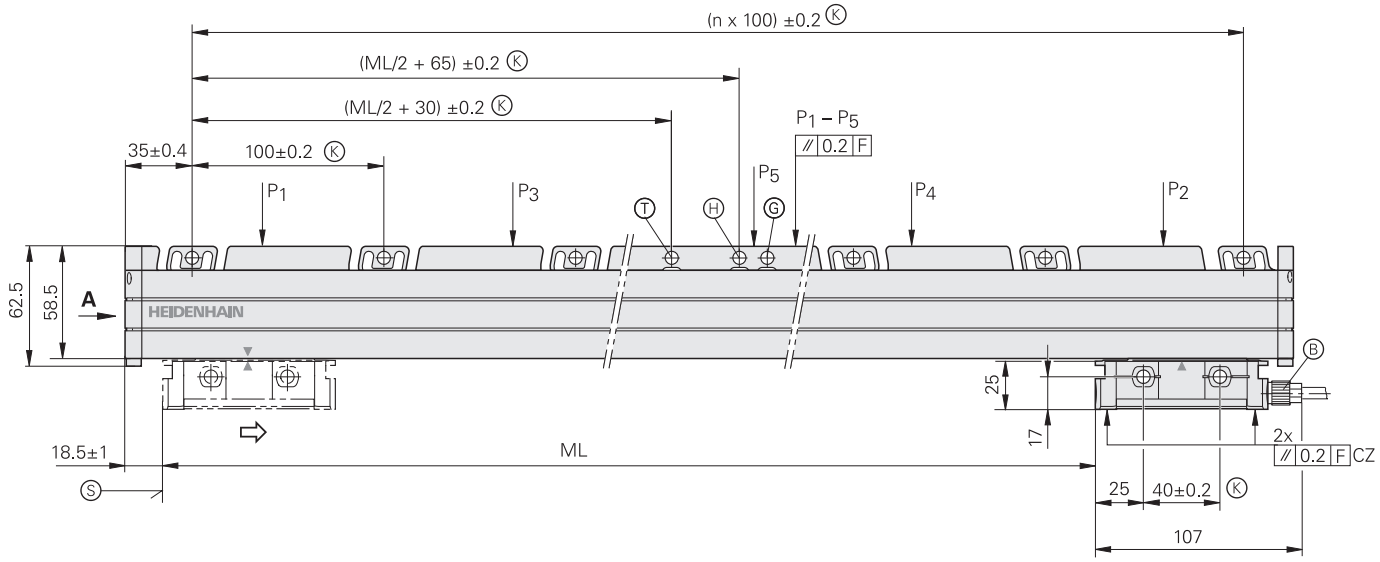

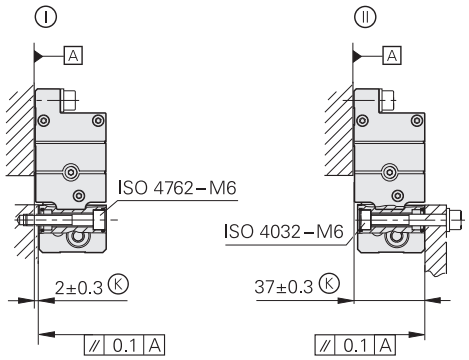

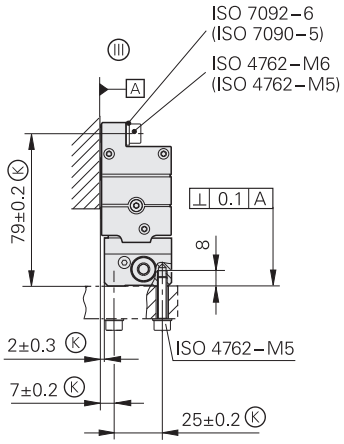

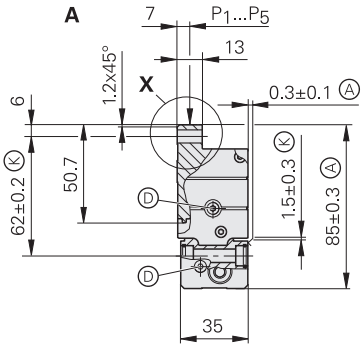

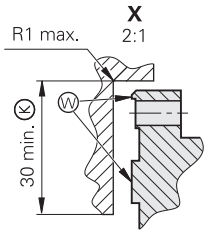

mm

Tolerancing ISO 8015
ISO 2768:1989-mH
≤ 6 mm: ±0.2 mm

Ⓘ, Ⓘⓘ,
Ⓘⓘⓘ = Mounting options
F = Machine guideway
P = Measuring points for alignment
Ⓚ = Required mating dimensions
Ⓐ = Alternative mating dimensions
Ⓑ = Cable connection, usable on either side
Ⓓ = Compressed air inlet usable on either side
Ⓣ = Mechanical fixed point (to be preferred)
Ⓗ = Mechanical fixed point, compatible to predecessor model
Ⓖ = Mechanical fixed point, with spacing interval of 100 mm
Ⓢ = Beginning of measuring length (ML) (= 20 mm absolute)
Ⓦ = Mating surfaces
⇨ = Direction of motion of the scanning unit for ascending position values

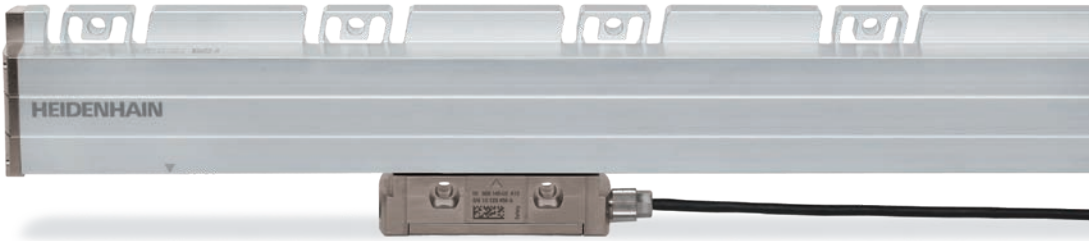

Specifications	LC 115 Functional Safety	LC 115	LC 185
Measuring standard Coefficient of linear expansion	DIADUR glass scale with absolute track and incremental track; grating period: 20 µm $\alpha_{therm} \approx 8 \cdot 10^{-6}\ K^{-1}$		
Accuracy grade*	±3 µm up to a measuring length of 3040 mm; ±5 µm (typical interpolation error: ±20 nm)		
Measuring length (ML)* in mm	140 240 340 440 540 640 740 840 940 1040 1140 1240 1340 1440 1540 1640 1740 1840 2040 2240 2440 2640 2840 3040 3240 3440 3640 3840 4040 4240		
Functional safety for applications with up to	• SIL 2 as per EN 61508 (further basis for testing: IEC 61800-5-3) • Category 3, PL d as per EN ISO 13849-1:2015	–	
PFH (per axis)	≤ 15 · 10^{-9}; ML > 3040 mm: ≤ 25 · 10^{-9} (up to 2000 m above sea level)	–	
Safe position[1]	Encoder: ±550 µm; ML > 3040 mm: ±2050 µm (SM = 220 µm)	–	
	Mechanical connection: fault exclusions for loosening of the housing and scanning unit (page 21)		
Interface	EnDat 2.2		
Ordering designation	EnDat22		EnDat02
Measuring step At ±3 µm At ±5 µm	0.001 µm 0.010 µm		0.005 µm 0.010 µm
Clock frequency (calc. time t_{cal})	≤ 16 MHz (≤ 5 µs)		≤ 2 MHz (≤ 5 µs)
Measurement of direct-drive motor temperature[2]	With EIB 5211 or EIB 5181		With EIB 5281 or EIB 5181
Incremental signals	–		∿ 1 V_{PP} (20 µm)
Cutoff frequency –3 dB	–		≥ 150 kHz
Electrical connection	Separate adapter cable (1 m / 3 m / 6 m / 9 m), connectable at either end of mounting block		
Cable length	≤ 100 m[3]		≤ 150 m[3]
Supply voltage	DC 3.6 V to 14 V		
Power consumption (maximum)	3.6 V: ≤ 1.1 W; 14 V: ≤ 1.3 W		
Traversing speed	≤ 180 m/min (max. acceleration in the direction of measurement ≤ 100 m/s^2)		
Required moving force	≤ 4 N		
Vibration 55 Hz to 2000 Hz acting on **Shock** 11 ms	Housing: ≤ 200 m/s^2 (EN 60068-2-6) Scanning unit: ≤ 200 m/s^2 (EN 60068-2-6) ≤ 300 m/s^2 (EN 60068-2-27)		
Operating temperature	0 °C to 50 °C		
Protection EN 60529[4]	IP53 when installed as per the instructions in the brochure; IP64 with sealing air from DA 400		
Mass	0.55 kg + 2.9 kg/m of measuring length		

* Please select when ordering; [1] Further tolerances may arise in the downstream electronics after position value comparison (contact mfr. of downstream electronics); [2] Depending on the serial number index of the encoder; please consult HEIDENHAIN; [3] With HEIDENHAIN cable (see the *Interfaces of HEIDENHAIN Encoders* brochure); [4] In the application, protect the LC from the ingress of particles and liquids

LC 100 series

Absolute linear encoders with full-size scale housing

- **High vibration tolerance**
- **Flat-lying installation possible**
- **High reliability through double sealing lips**

Specifications	**LC 195 S** Functional Safety	**LC 195 S**
Measuring standard Coefficient of linear expansion	DIADUR glass scale with absolute track and incremental track; grating period: 20 µm $\alpha_{therm} \approx 8 \cdot 10^{-6}\ K^{-1}$	
Accuracy grade*	±3 µm up to a measuring length of 3040 mm; ±5 µm (typical interpolation error: ±20 nm)	
Measuring length ML* in mm	140 240 340 440 540 640 740 840 940 1040 1140 1240 1340	
Functional safety for applications with up to	• SIL 2 as per EN 61508 • Category 3, PL d as per EN ISO 13849-1:2015	–
PFH (per axis)	≤ 25 · 10^{-9}; ML > 3040 mm: ≤ 40 · 10^{-9} (up to 1000 m above sea level)	–
Safe position[1]	Encoder: ±550 µm; ML > 3040 mm: ±2050 µm (safety-related measuring step SM = 220 µm)	–
	Mechanical connection: fault exclusions for loosening of the housing and scanning unit (page 21)	
Interface	DRIVE-CLiQ	
Ordering designation	DQ01	
Measuring step At ±3 µm At ±5 µm	 0.001 µm 0.010 µm	
Clock frequency (calculation time t_{cal})	–	
Measurement of direct-drive motor temperature[2]	–	
Electrical connection	Separate adapter cable (1 m / 3 m / 6 m / 9 m), connectable at either end of mounting block	
Cable length	≤ 30 m[3]	
Supply voltage	DC 10 V to 28.8 V	
Power consumption (maximum)	10 V: ≤ 1.5 W; 28.8 V: ≤ 1.7 W	
Traversing speed	≤ 180 m/min (max. acceleration ≤ 100 m/s^2)	
Required moving force	≤ 4 N	
Vibration 55 Hz to 2000 Hz acting on **Shock** 11 ms	Housing: ≤ 200 m/s^2 (EN 60068-2-6) Scanning unit: ≤ 200 m/s^2 (EN 60068-2-6) ≤ 300 m/s^2 (EN 60068-2-27)	
Operating temperature	0 °C to 50 °C	
Protection EN 60529[4]	IP53 when installed as per the instructions in the brochure; IP64 with sealing air from DA 400	
Mass	0.55 kg + 2.9 kg/m of measuring length	

* Please select when ordering
1) Further tolerances may arise in the downstream electronics after position value comparison (contact mfr. of downstream electronics)
2) Depending on the serial number index of the encoder; please consult HEIDENHAIN
3) Greater cable lengths upon request
4) In the application, protect the LC from the ingress of particles and liquids

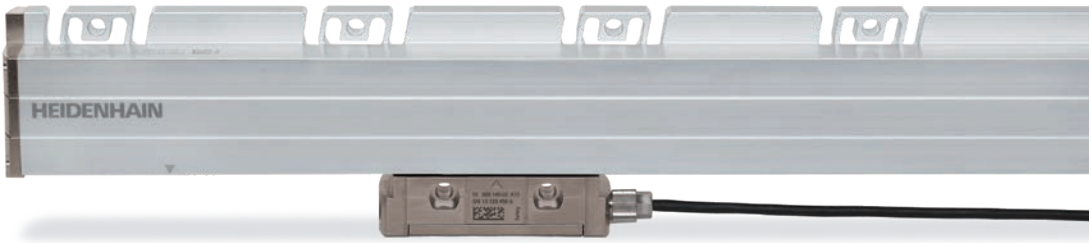

	LC 195 F	LC 195 M	LC 195 P
		±3 µm up to a measuring length of 2040 mm; ±5 µm (typical interpolation error: ±20 nm)	±3 µm up to a measuring length of 3040 mm; ±5 µm (typical interpolation error: ±20 nm)
	1440 1540 1640 1740 1840 2040	2240 2440 2640 2840 3040 3240	3440 3640 3840 4040 4240
	Fanuc Serial Interface/αi interface	Mitsubishi high speed interface	Panasonic Serial Interface
	Fanuc05	Mit03-04	Pana01
	αi interface/α interface 0.00125 µm/0.010 µm 0.0125 µm/0.050 µm	0.001 µm 0.010 µm	
	With EIB 5211	–	
	≤ 50 m	≤ 30 m	≤ 50 m
	DC 3.6 V to 14 V		
	3.6 V: ≤ 1.1 W; 14 V: ≤ 1.3 W		

LC 100 series (TRUE IMAGE TECHNOLOGY)

Absolute linear encoders with full-size scale housing

- **High vibration tolerance**
- **Flat-lying installation possible**

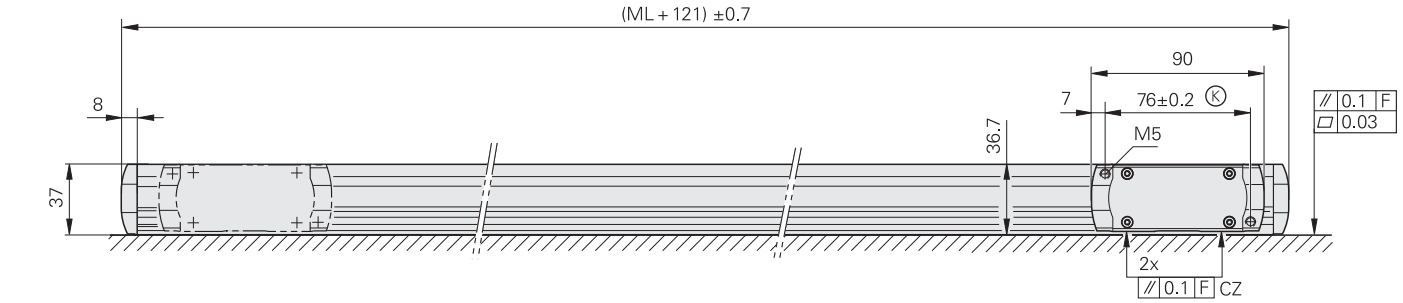

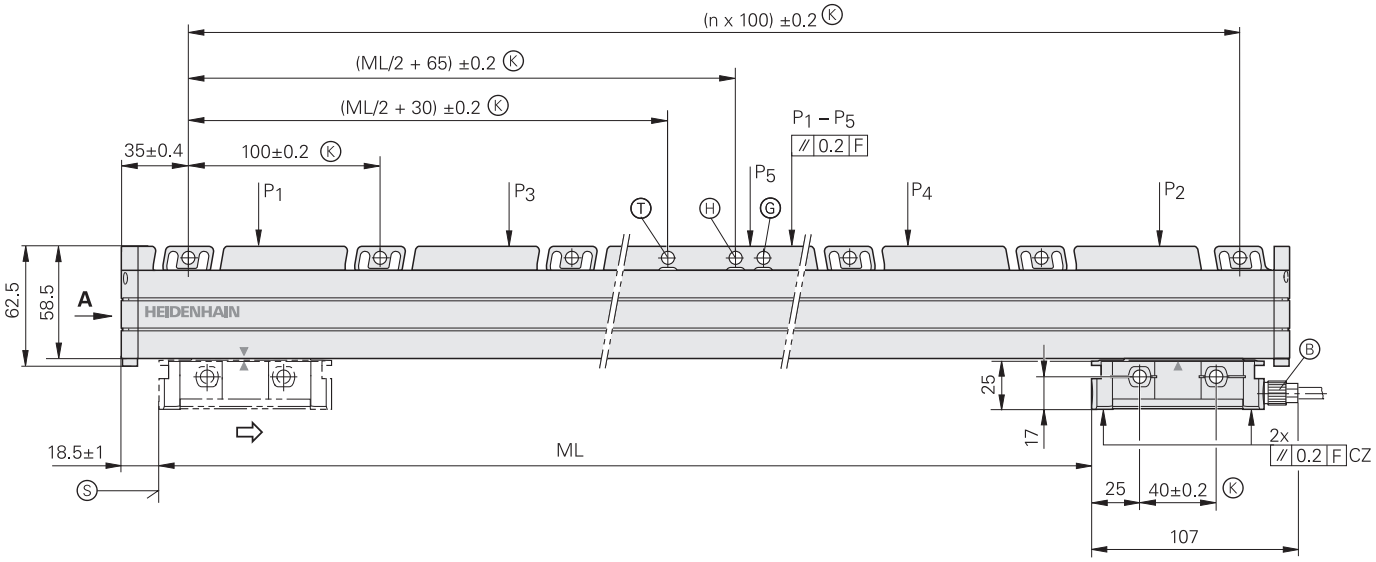

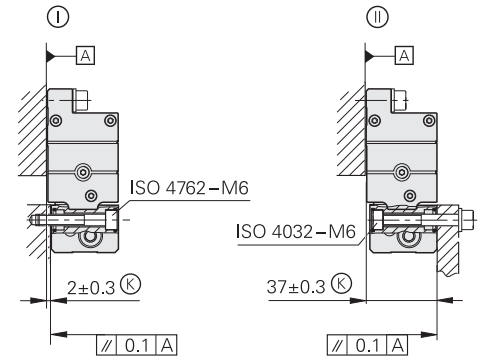

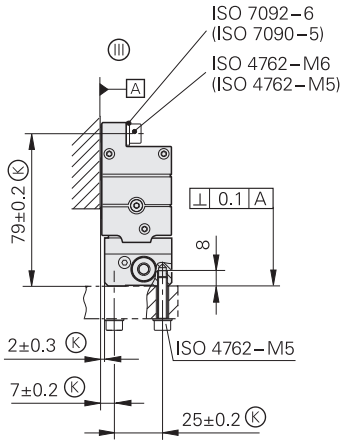

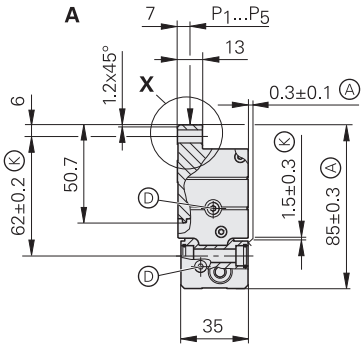

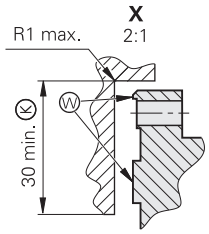

mm

Tolerancing ISO 8015
ISO 2768:1989-mH
≤ 6 mm: ±0.2 mm

Ⓘ, Ⓘⓘ,
Ⓘⓘⓘ = Mounting options
F = Machine guideway
P = Measuring points for alignment
Ⓚ = Required mating dimensions
Ⓐ = Alternative mating dimensions
Ⓑ = Cable connection, usable on either side
Ⓓ = Compressed air inlet with built-in flow regulator, usable on either side
Ⓣ = Mechanical fixed point (to be preferred)
Ⓗ = Mechanical fixed point, compatible to predecessor model
Ⓖ = Mechanical fixed point, with spacing interval of 100 mm
Ⓢ = Beginning of measuring length (ML) (= 20 mm absolute)
Ⓦ = Mating surfaces
⇨ = Direction of motion of the scanning unit for ascending position values

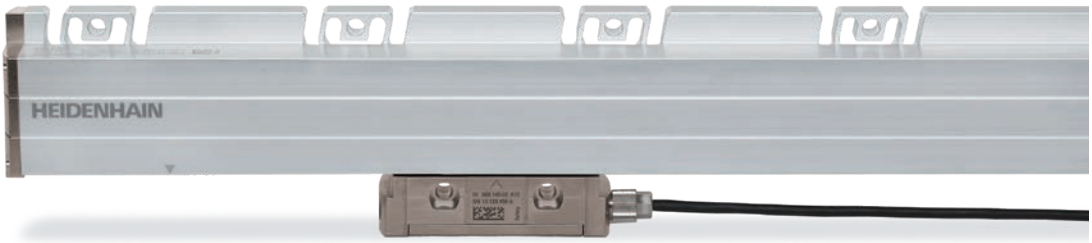

Specifications	LC 116 Functional Safety	LC 196 S Functional Safety
Measuring standard Coefficient of linear expansion	DIADUR glass scale with absolute track and incremental track; grating period: 27.5 µm $\alpha_{therm} \approx 8 \cdot 10^{-6}\ K^{-1}$	
Accuracy grade	±3 µm up to a measuring length of 3040 mm; ±5 µm (typical interpolation error: ±30 nm)	
Measuring length (ML)* in mm	140 240 340 440 540 640 740 840 940 1040 1140 1240 1340 1440 1540 1640 1740 1840 2040 2240 2440 2640 2840 3040 3240 3440 3640 3840 4040 4240	
Functional safety for applications with up to	• SIL 2 as per EN 61508 (further basis for testing: IEC 61800-5-3) • Category 3, PL "d" as per EN ISO 13849-1	
PFH (per axis)	$\leq 20 \cdot 10^{-9}$; ML > 3040 mm: $\leq 30 \cdot 10^{-9}$ (up to 2000 m above sea level)	$\leq 30 \cdot 10^{-9}$; ML > 3040 mm: $\leq 40 \cdot 10^{-9}$ (up to 1000 m above sea level)
Safe position[1]	Encoder: ±4000 µm; ML > 3040 mm: ±5000 µm (SM = 220 µm)	
	Mechanical connection: fault exclusions for loosening of the housing and scanning unit (see "Functional safety")	
Interface	EnDat 2.2	DRIVE-CLiQ
Ordering designation	EnDat22	DQ01
Measuring step At ±3 µm At ±5 µm	0.001 µm 0.010 µm	
Clock frequency (calc. time t_{cal})	≤ 16 MHz (≤ 5 µs)	–
Measurement of direct-drive motor temperature	With EIB 5211 or EIB 5181	–
Electrical connection	Separate adapter cable (1 m / 3 m / 6 m / 9 m), connectable at either end of mounting block	
Cable length	≤ 100 m[2]	≤ 30 m[3]
Supply voltage	DC 3.6 V to 14 V	DC 10 V to 28.8 V
Power consumption (max.)	3.6 V: ≤ 1.1 W; 14 V: ≤ 1.3 W	10 V: ≤ 1.5 W; 28.8 V: ≤ 1.7 W
Traversing speed	≤ 180 m/min (max. acceleration in the direction of measurement ≤ 100 m/s²)	
Required moving force	≤ 4 N	
Vibration 55 Hz to 2000 Hz acting on **Shock** 11 ms	Housing: ≤ 200 m/s² (EN 60068-2-6) Scanning unit: ≤ 200 m/s² (EN 60068-2-6) ≤ 300 m/s² (EN 60068-2-27)	
Operating temperature	0 °C to 50 °C	
Protection EN 60529[4]	IP54 when installed as per the mounting information in the brochure; IP64 with purge air (air purity class [3:4:2] as per ISO 8573-1:2010)	
Mass	0.55 kg + 2.9 kg/m of measuring length	

Due to optimized scanning, the encoders have only one pair of sealing lips.

* Please select when ordering
1) Further tolerances may arise in the downstream electronics after position value comparison (contact mfr. of downstream electronics)
2) With cable from HEIDENHAIN (see *Interfaces of HEIDENHAIN Encoders* brochure)
3) Greater cable lengths upon request
4) In the application, the LC must be protected from the ingress of particles.
In addition, pollution degree 3 must be complied with in the micro-environment (see EN 60664-1).

LC 100 series (TRUE IMAGE TECHNOLOGY)

Absolute linear encoders with full-size scale housing
- **High vibration tolerance**
- **Flat-lying installation possible**

Specifications	**LC 196 F**
Measuring standard Coefficient of linear expansion	DIADUR glass scale with absolute track and incremental track; grating period: 27.5 µm $\alpha_{therm} \approx 8 \cdot 10^{-6}\ K^{-1}$
Accuracy grade	±3 µm up to a measuring length of 3040 mm (LC 196 M: up to 2040 mm); ±5 µm (typical interpolation error: ±30 nm)
Measuring length (ML)* in mm	140 240 340 440 540 640 740 840 940 1040 1140 1240 1340
Functional safety for applications up to	–
PFH (per axis)	–
Safe position	–
	Mechanical connection: fault exclusions for loosening of the housing and scanning unit (see "Functional safety")
Interface	Fanuc Serial Interface/αi interface
Ordering designation	Fanuc05
Measuring step At ±3 µm At ±5 µm	αi interface/α interface 0.00125 µm/0.010 µm 0.0125 µm/0.050 µm
Clock frequency (calculation time t_{cal})	–
Measurement of direct-drive motor temperature	–
Electrical connection	Separate adapter cable (1 m / 3 m / 6 m / 9 m), connectable at either end of mounting block
Cable length	≤ 50 m
Supply voltage	DC 3.6 V to 14 V
Power consumption (maximum)	3.6 V: ≤ 1.1 W; 14 V: ≤ 1.3 W
Traversing speed	≤ 180 m/min (max. acceleration in the direction of measurement ≤ 100 m/s^2)
Required moving force	≤ 4 N
Vibration 55 Hz to 2000 Hz acting on **Shock** 11 ms	Housing: ≤ 200 m/s^2 (EN 60068-2-6) Scanning unit: ≤ 200 m/s^2 (EN 60068-2-6) ≤ 300 m/s^2 (EN 60068-2-27)
Operating temperature	0 °C to 50 °C
Protection class EN 60529[2)]	IP54 when installed as per the mounting information in the brochure; IP64 with purge air (air purity class [3:4:2] as per ISO 8573-1:2010)
Mass	0.55 kg + 2.9 kg/m of measuring length

Due to optimized scanning, the encoders have only one pair of sealing lips.

* Please select when ordering
1) With cable from HEIDENHAIN (see *Interfaces of HEIDENHAIN Encoders* brochure)
2) In the application, the LC must be protected from the ingress of particles.
In addition, pollution degree 3 must be complied with in the micro-environment (see EN 60664-1).

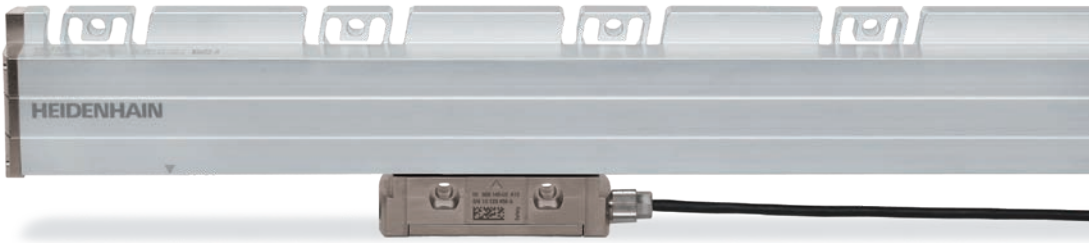

	LC 196 M
	1440 1540 1640 1740 1840 2040 2240 2440 2640 2840 3040 3240 3440 3640 3840 4040 4240
	Mitsubishi high speed interface
	Mit03-04
	0.001 µm 0.010 µm
	–
	–
	≤ 30 m

LC 200 series (single-section)

Absolute linear encoders with full-size scale housing

- **Measuring length up to 4240 mm**
- **Flat-lying installation possible**
- **Thermal behavior varies depending on the mounting option being used**

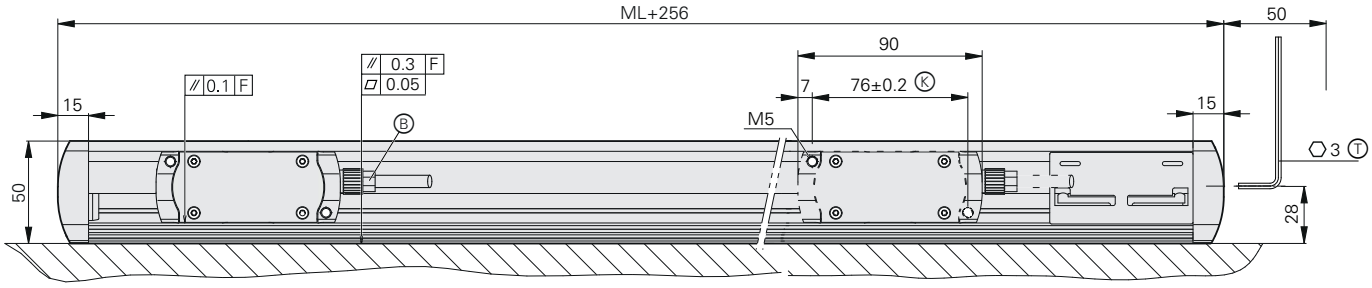

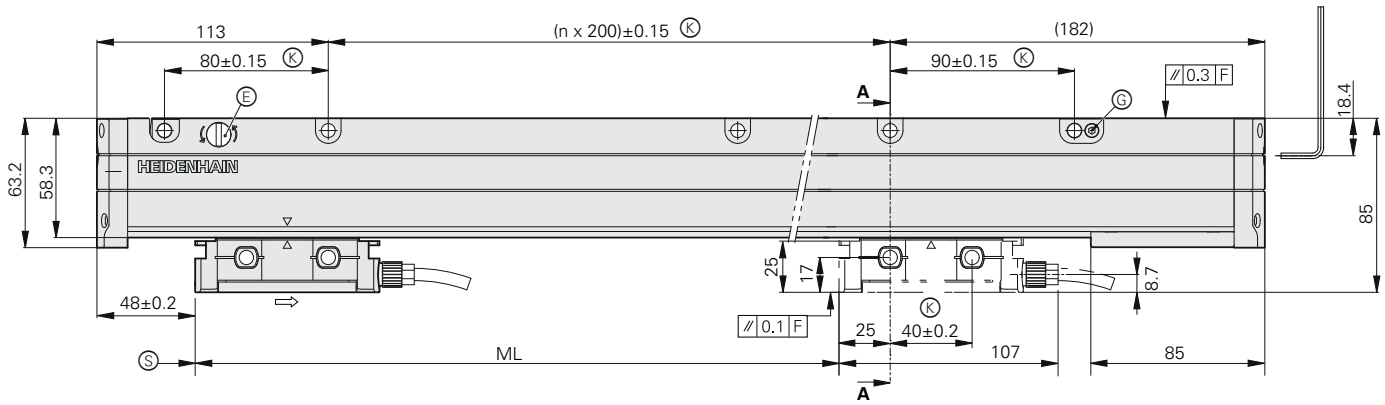

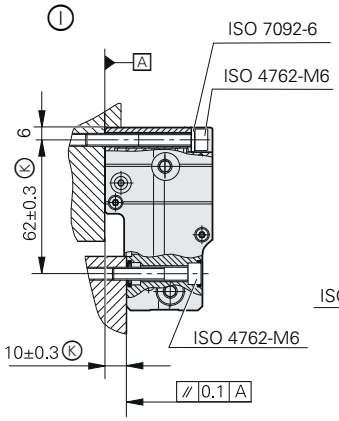

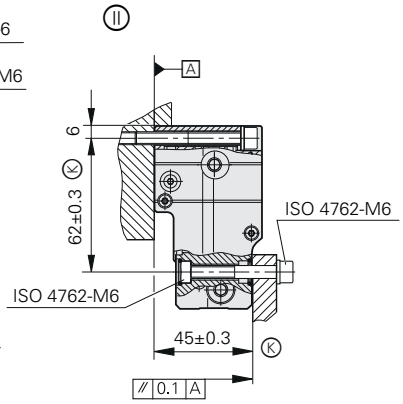

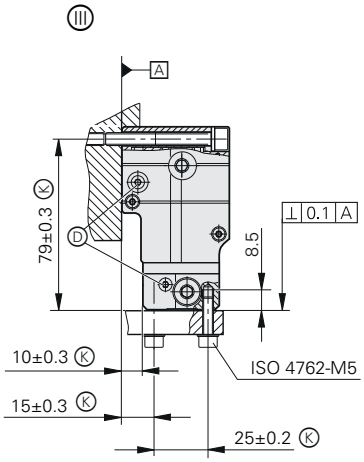

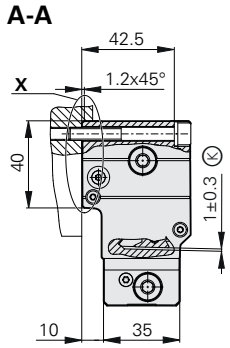

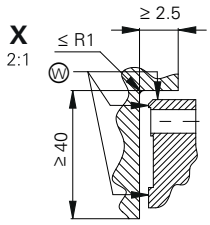

I, II,
III = Mounting options
F = Machine guideway
K = Required mating dimensions
B = Cable connection, usable on either side
T = Tensioning screw for scale tape
D = Inlet for compressed air
E = Stopper
G = Clamping screw for scale tape
S = Beginning of measuring length (ML) (= 100 mm absolute)
W = Mating surfaces
⇨ = Direction of motion of the scanning unit for output signals in accordance with the interface description
ML = Measuring length

mm
Tolerancing ISO 8015
ISO 2768:1989-mH
≤ 6 mm: ±0.2 mm

Mirrored version

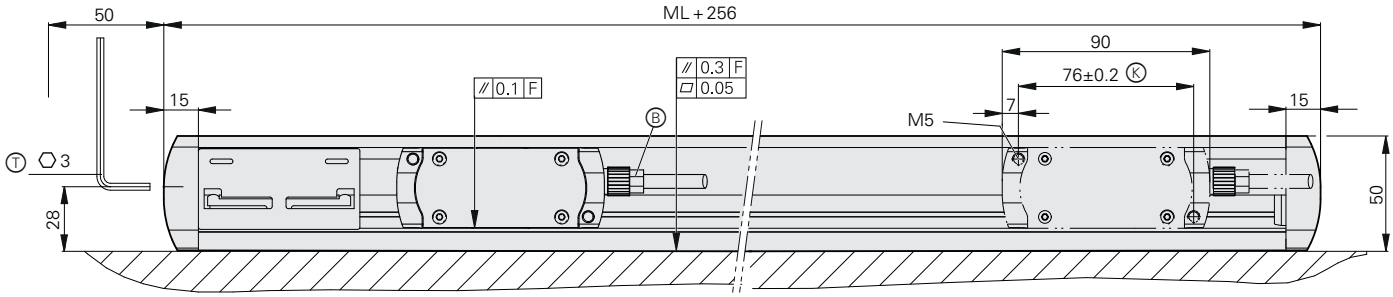

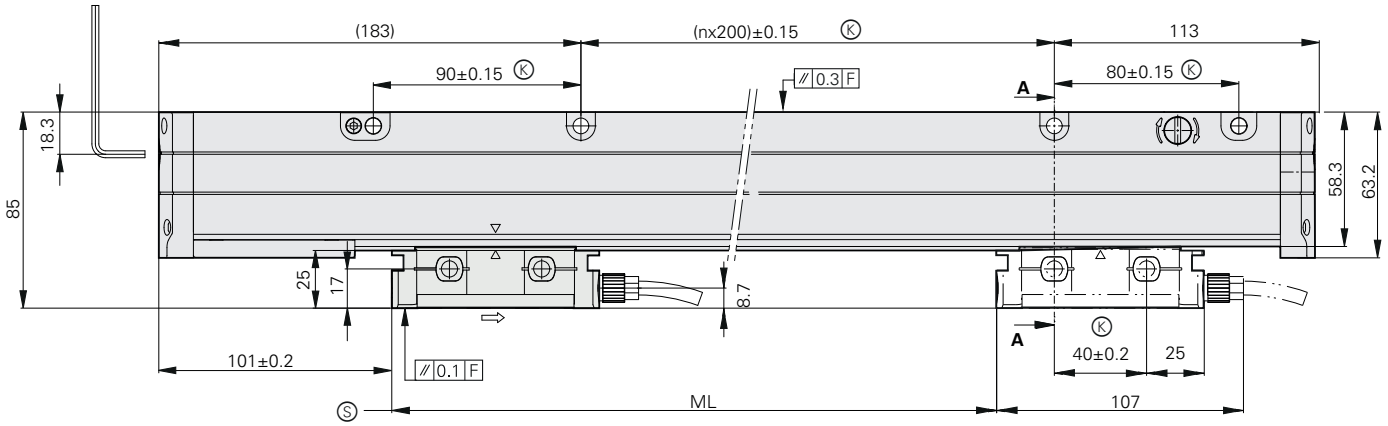

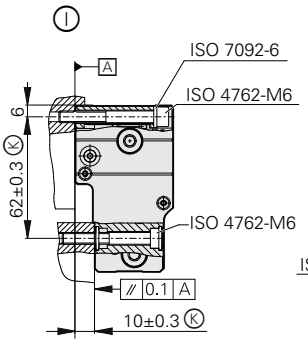

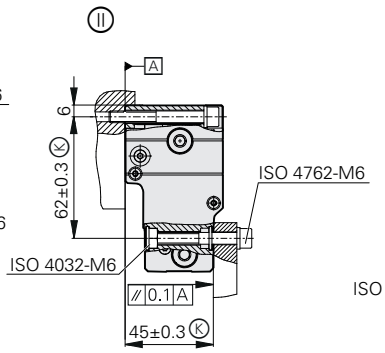

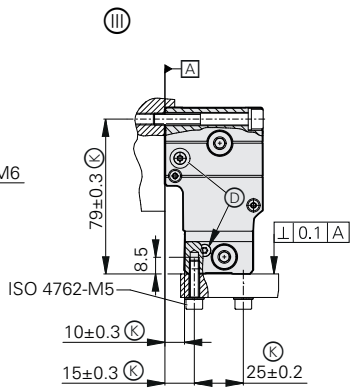

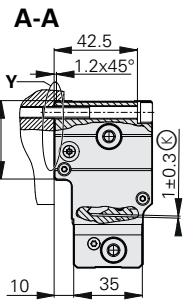

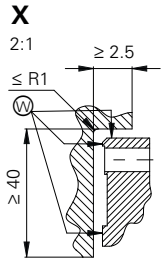

Ⓘ, Ⓘⓘ,
Ⓘⓘⓘ = Mounting options
F = Machine guideway
Ⓚ = Required mating dimensions
Ⓑ = Cable connection, usable on either side
Ⓣ = Tensioning screw for scale tape
Ⓓ = Inlet for compressed air
Ⓔ = Stopper
Ⓖ = Clamping screw for scale tape
Ⓢ = Beginning of measuring length (ML) (= 100 mm absolute)
Ⓦ = Mating surfaces
⇨ = Direction of motion of the scanning unit for output signals in accordance with the interface description
ML = Measuring length

mm
Tolerancing ISO 8015
ISO 2768:1989-mH
≤ 6 mm: ±0.2 mm

LC 200 series (single-section)

Absolute linear encoders with full-size scale housing

- **Measuring length up to 4240 mm**
- **Flat-lying installation possible**
- **Thermal behavior varies depending on the mounting option being used**

Specifications	**LC 211**	**LC 281**
Measuring standard Coefficient of linear expansion	METALLUR steel scale tape with absolute track and incremental track (grating period: 40 µm) $\alpha_{therm} \approx 10 \cdot 10^{-6}\ K^{-1}$	
Accuracy grade	±5 µm	
Measuring length ML* in mm	440 640 840 1040 1240 1440 1640 1840 2040 2240 2440 2640 2840	
Interface	EnDat 2.2	
Ordering designation	EnDat22	EnDat02
Measuring step	0.010 µm	
Diagnostics interface	Digital	
Clock frequency Calculation time t_{cal}	≤ 16 MHz ≤ 5 µs	≤ 2 MHz ≤ 5 µs
Measurement of direct-drive motor temperature	–	With EIB 5281 or EIB 5181
Incremental signals	–	∿ 1 V_{PP}
Signal period	–	40 µm
Cutoff frequency –3 dB	–	≥ 250 kHz
Electrical connection	Separate adapter cable (1 m / 3 m / 6 m / 9 m), connectable at either end of mounting block	
Cable length[1)]	≤ 100 m (at clock frequency ≤ 8 MHz)	≤ 150 m
Supply voltage	DC 3.6 V to 14 V	
Power consumption (max.)	At 14 V: ≤ 1.3 W At 3.6 V: ≤ 1.1 W	
Current consumption (typical)	At 5 V: 225 mA (without load)	
Traversing speed	≤ 180 m/min (max. acceleration in the direction of measurement ≤ 100 m/s^2)	
Required moving force	≤ 15 N	
Vibration 55 Hz to 2000 Hz acting on **Shock** 11 ms	Housing: 200 m/s^2 (EN 60068-2-6) Scanning unit: 300 m/s^2 (EN 60068-2-6) ≤ 300 m/s^2 (EN 60068-2-27)	
Operating temperature	0 °C to 50 °C	
Protection EN 60529	IP53 when installed in accordance with mounting instructions, IP64 with purge air via DA 400	
Mass	1.3 kg + 3.6 kg/m of measuring length	

* Please select when ordering
1) With HEIDENHAIN cable

	LC 291 F	LC 291 M
	3040 3240 3440 3640 3840 4040 4240	
	Fanuc Serial Interface αi interface	Mitsubishi high speed interface
	Fanuc05	Mit03-04
	αi interface/α interface 0.0125 µm/0.050 µm	0.010 µm
	– –	
	–	
	–	
	–	
	–	
	≤ 50 m	≤ 30 m

LC 200 series (multi-section)

Absolute linear encoders with full-size scale housing

- **Measuring lengths of up to 28 m**
- **Simplified mounting (upright or flat)**

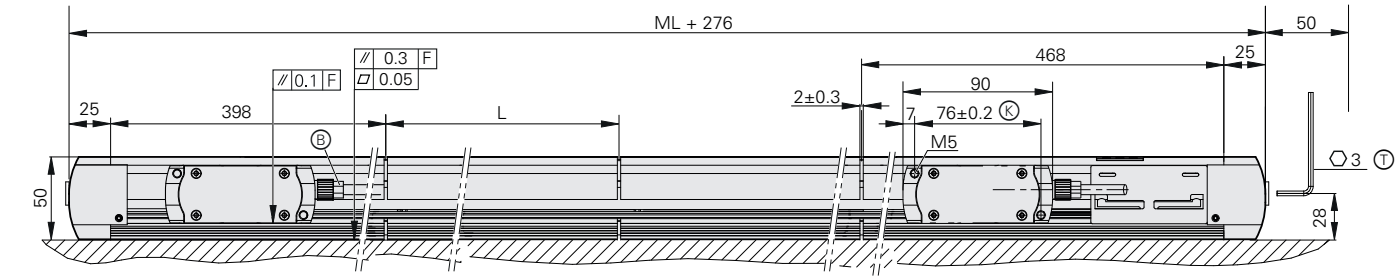

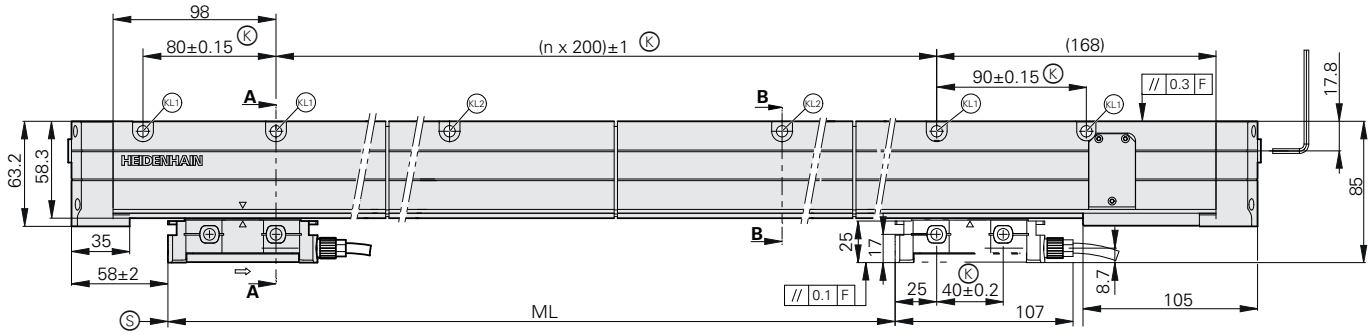

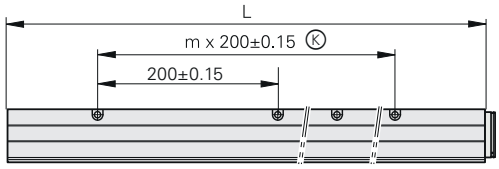

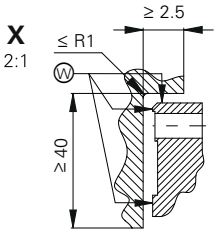

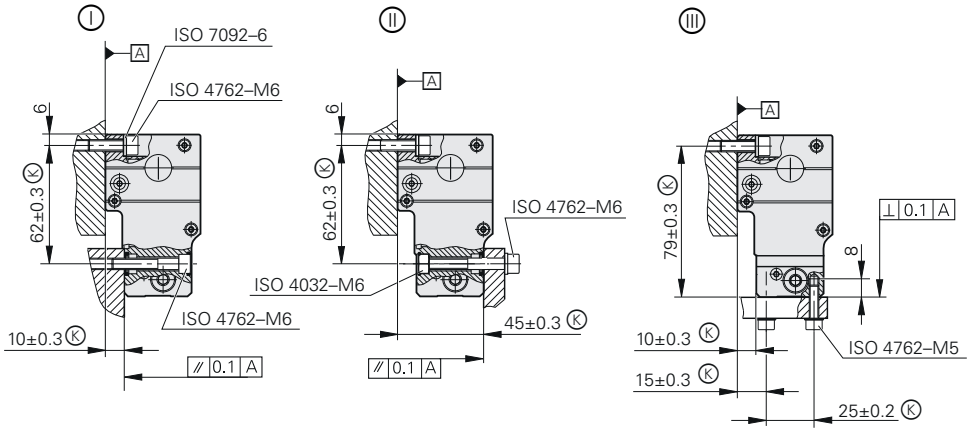

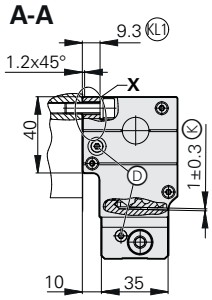

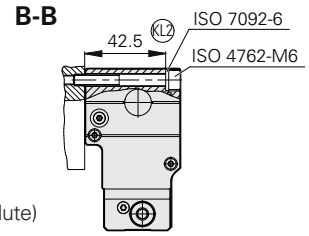

I, II,
III = Mounting options
F = Machine guideway
K = Required mating dimensions
B = Cable connection, usable on either side
T = Tensioning screw for scale tape
D = Inlet for compressed air
S = Beginning of measuring length (ML) (= 100 mm absolute)
W = Mating surfaces
KL1 KL2 = Clamping length
⇨ = Direction of motion of the scanning unit for output signals in accordance with the interface description
L = Length of housing section
ML = Measuring length

mm

Tolerancing ISO 8015
ISO 2768:1989-mH
≤ 6 mm: ±0.2 mm

Mirrored version

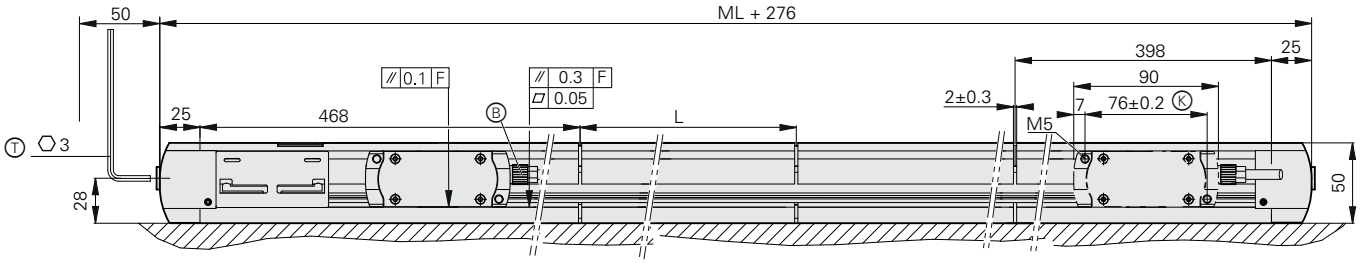

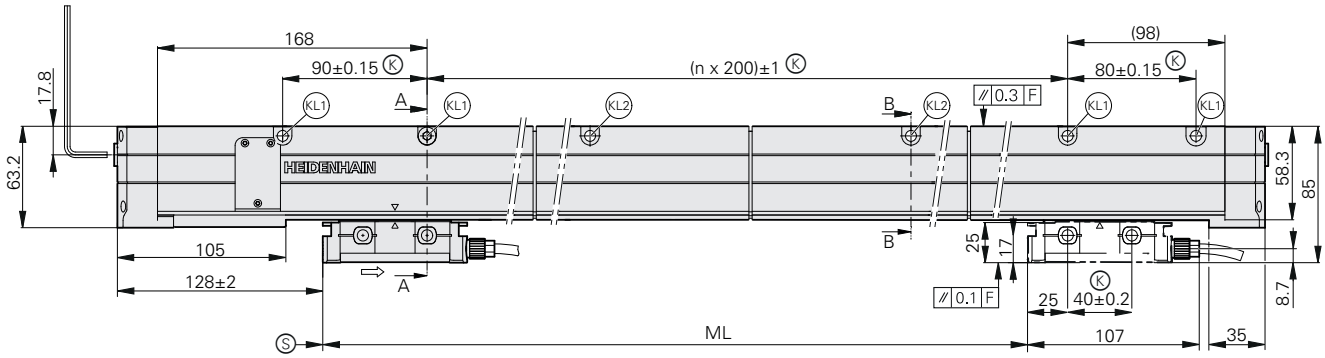

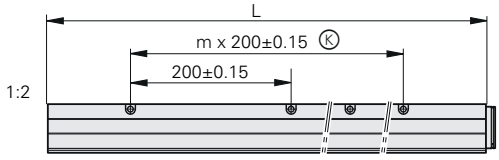

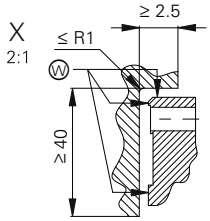

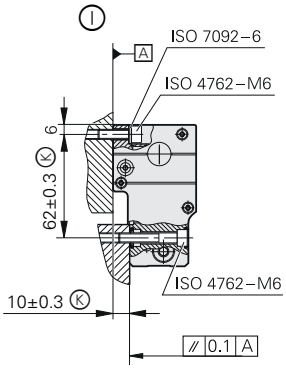

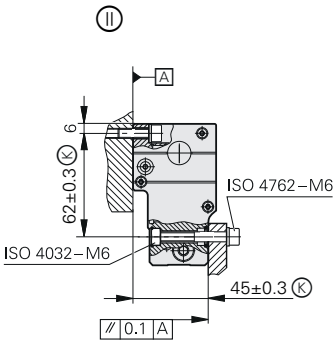

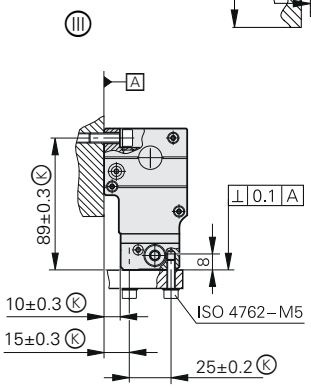

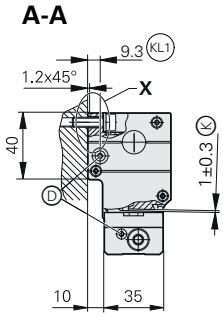

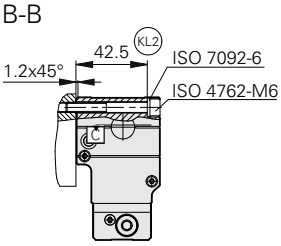

Ⓘ, Ⓘ,
Ⓘ = Mounting options
F = Machine guideway
Ⓚ = Required mating dimensions
Ⓑ = Cable connection, usable on either side
Ⓣ = Tensioning screw for scale tape
Ⓓ = Inlet for compressed air
Ⓢ = Beginning of measuring length (ML) (= 100 mm absolute)
Ⓦ = Mating surfaces
KL1 KL2 = Clamping length
⇨ = Direction of motion of the scanning unit for output signals in accordance with the interface description
L = Length of housing section
ML = Measuring length

mm
Tolerancing ISO 8015
ISO 2768:1989-mH
≤ 6 mm: ±0.2 mm

LC 200 series (multi-section)

Absolute linear encoders with full-size scale housing

- **Measuring lengths of up to 28 m**
- **Simplified mounting (upright or flat)**

Specifications	**LC 211**	**LC 281**
Measuring standard Coefficient of linear expansion	METALLUR steel scale tape with absolute track and incremental track (grating period: 40 µm) Same as machine main casting	
Accuracy grade	±5 µm	
Measuring length (ML)* in mm	3240 mm to 28040 mm in steps of 200 mm[2)] Kit with single-section METALLUR steel scale tape and housing sections	
Interface	EnDat 2.2	
Ordering designation	EnDat22	EnDat02
Measuring step	0.010 µm	
Diagnostics interface	Digital	
Clock frequency Calculation time t_{cal}	≤ 16 MHz ≤ 5 µs	≤ 2 MHz ≤ 5 µs
Measurement of direct-drive motor temperature	–	With EIB 5281 or EIB 5181
Incremental signals	–	∿ 1 V_{PP}
Signal period	–	40 µm
Cutoff frequency –3 dB	–	≥ 250 kHz
Electrical connection	Separate adapter cable (1 m/3 m/6 m/9 m), connectable at either end of mounting block	
Cable length[1)]	≤ 100 m (at clock frequency ≤ 8 MHz)	≤ 150 m
Supply voltage	DC 3.6 V to 14 V	
Power consumption (max.)	At 14 V: ≤ 1.3 W At 3.6 V: ≤ 1.1 W	
Current consumption (typical)	At 5 V: 225 mA (without load)	
Traversing speed	≤ 180 m/min (max. acceleration in the direction of measurement ≤ 100 m/s^2)	
Required moving force	≤ 15 N	
Vibration 55 Hz to 2000 Hz acting on **Shock** 11 ms	Housing: 200 m/s^2 (EN 60068-2-6) Scanning unit: 300 m/s^2 (EN 60068-2-6) ≤ 300 m/s^2 (EN 60068-2-27)	
Operating temperature	0 °C to 50 °C	
Protection EN 60529	IP53 when installed as per the mounting instructions, IP64 with purge air via DA 400	
Mass	1.3 kg + 3.6 kg/m of measuring length	

* Please select when ordering
1) With HEIDENHAIN cable
2) LC 291 M up to 20040 mm

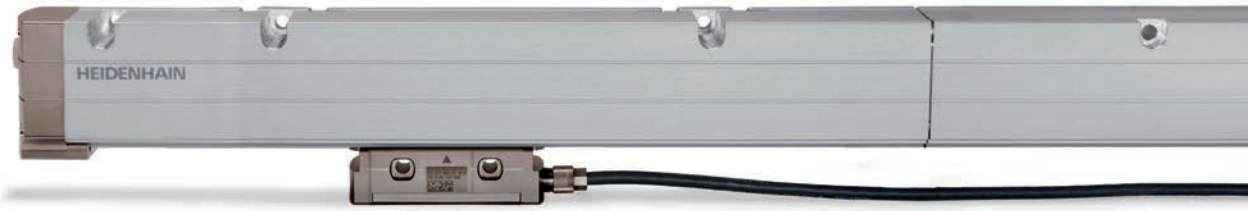

	LC 291 F	LC 291 M
	Fanuc Serial Interface αi interface	Mitsubishi high speed interface
	Fanuc05	Mit03-04
	αi interface/α interface 0.0125 µm/0.050 µm	0.010 µm
	– –	
	–	
	–	
	–	
	–	
	≤ 50 m	≤ 30 m

LS 400 series

Incremental linear encoders with slimline scale housing

- **Low installation space requirements**

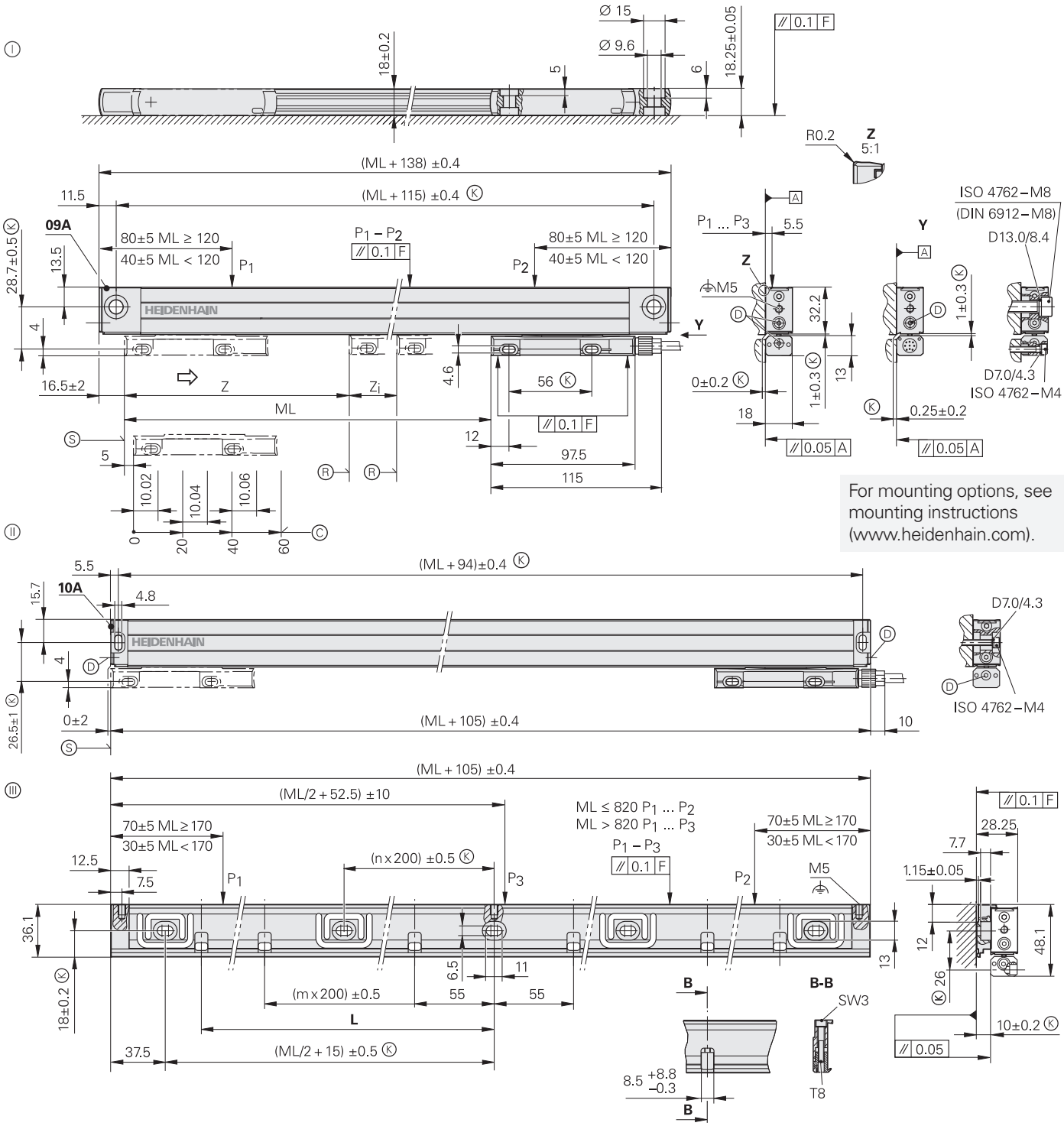

For mounting options, see mounting instructions (www.heidenhain.com).

ML	70	120	170	220	270	320	370	420	470	520	570	620	670	720	770	820	870	920	970	1020	1070	1140	1240	1340	1440	1540	1640	1740	1840	2040
L	37.5	55	75	100	115	140	175	200	225	250	275	300	325	350	375	400	425	450	475	500	515	555	610	655	710	760	810	855	910	1010

mm

Tolerancing ISO 8015
ISO 2768:1989-mH
≤ 6 mm: ±0.2 mm

Ⓘ = 09A end block; for mounting with and without mounting spar
Ⓘⓘ = 10A end block; for mounting with mounting spar
Ⓘⓘⓘ = MSL 41 mounting spar
F = Machine guideway
P = Measuring points for alignment

Ⓚ = Required mating dimensions
Ⓡ = Reference mark position on LS 4x7; two reference marks for measuring lengths

70 to 1020	1140 to 2040
z = 35 mm	z = 45 mm
z_i = ML – 70 mm	z_i = ML – 90 mm

Ⓒ = Reference mark position on LS 4x7C
Ⓓ = Inlet for compressed air
Ⓢ = Beginning of measuring length (ML)
⇨ = Direction of motion of the scanning unit for ascending position values

LS 4x7 without mounting spar

LS 4x7 with mounting spar

Specifications	LS 487	LS 477						
Measuring standard Coefficient of linear expansion	Glass scale with DIADUR grating; grating period: 20 µm $\alpha_{therm} \approx 8 \cdot 10^{-6}\ K^{-1}$ (mounting type ①/⑪); with mounting spar: $\alpha_{therm} \approx 9 \cdot 10^{-6}\ K^{-1}$ (mounting type ⑩)							
Accuracy grade*	±5 µm; ±3 µm							
Measuring length (ML)* in mm	Mounting spar* optional up to ML 1240, required with ML 1340 or longer 70 120 170 220 270 320 370 420 470 520 570 620 670 720 770 820 920 1020 1140 1240 1340 1440 1540 1640 1740 1840 2040							
Reference marks* LS 4x7 LS 4x7 C	• Selectable with magnets every 50 mm • One reference mark at midpoint of measuring length • Two reference marks, each 35 mm (for ML ≤ 1020 mm) or 45 mm (for ML ≥ 1140 mm) from the beginning and end of the measuring length Distance-coded							
Interface	∿ 1 V_{PP}	⊓⊔TTL						
Integrated interpolation* Signal period	– 20 µm	5-fold –		10-fold –			20-fold –	
Diagnostics interface	Analog	–						
Cutoff frequency –3 dB	≥ 160 kHz	–		–			–	
Scanning frequency* Edge separation *a*	–	100 kHz ≥ 0.5 µs	50 kHz ≥ 1 µs	100 kHz ≥ 0.25 µs	50 kHz ≥ 0.5 µs	25 kHz ≥ 1 µs	50 kHz ≥ 0.25 µs	25 kHz ≥ 0.5 µs
Measuring step	Depends on interpolation	1 µm[1)]		0.5 µm[1)]			0.25 µm[1)]	
Electrical connection	Separate adapter cable (1 m / 3 m / 6 m / 9 m) connectable on mounting block							
Cable length[2)]	≤ 150 m	≤ 100 m						
Supply voltage without load	DC 5 V ±0.25 V/< 120 mA	DC 5 V ±0.25 V/< 140 mA						
Traversing speed	≤ 120 m/min	≤ 120 m/min	≤ 60 m/min	≤ 120 m/min	≤ 60 m/min	≤ 30 m/min	≤ 60 m/min	≤ 30 m/min
Required moving force	≤ 5 N							
Vibration 55 Hz to 2000 Hz **Shock** 11 ms **Acceleration**	Without mounting spar: ≤ 100 m/s^2 (EN 60068-2-6) With mounting spar, cable outlet at right: ≤ 200 m/s^2; at left: 100 m/s^2 (EN 60068-2-6) ≤ 300 m/s^2 (EN 60068-2-27) ≤ 100 m/s^2 in direction of measurement							
Operating temperature	0 °C to 50 °C							
Protection EN 60529	IP53 when installed as per the mounting information and instructions IP64 with purge air via DA 400							
Mass	0.4 kg + 0.5 kg/m of measuring length							

* Please select when ordering
1) After 4-fold evaluation in the downstream electronics
2) With HEIDENHAIN cable

LS 100 series

Incremental linear encoders with full-size scale housing

- **High vibration tolerance**
- **Flat-lying installation possible**

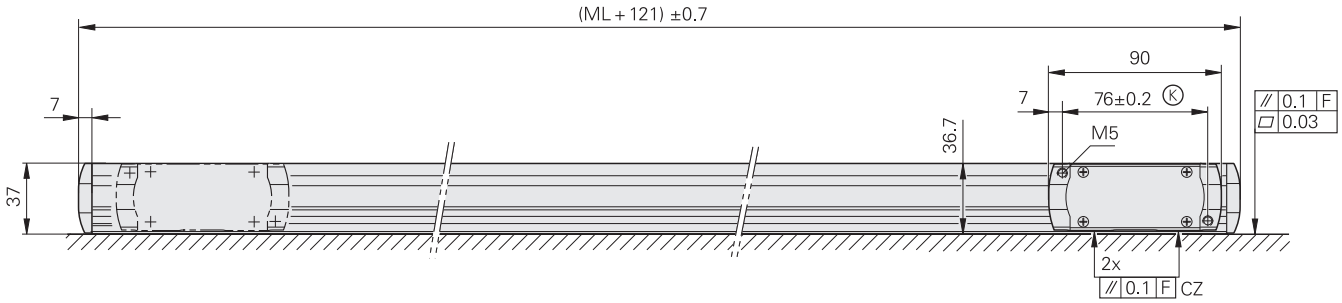

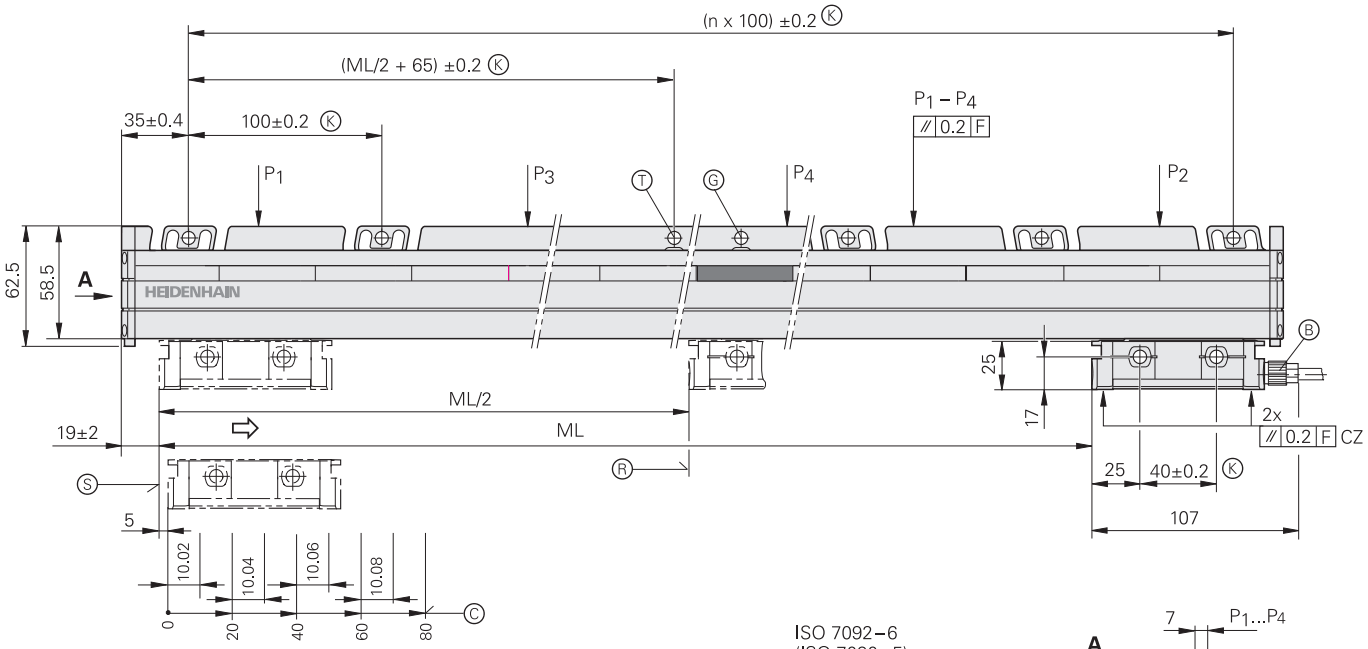

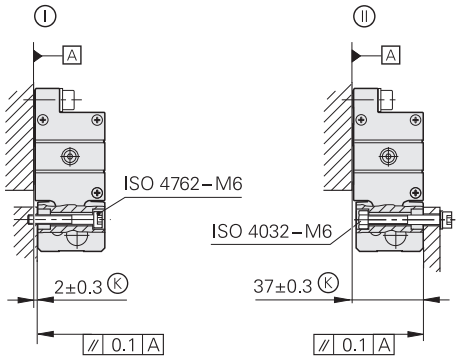

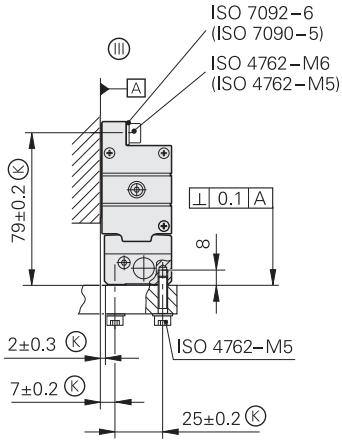

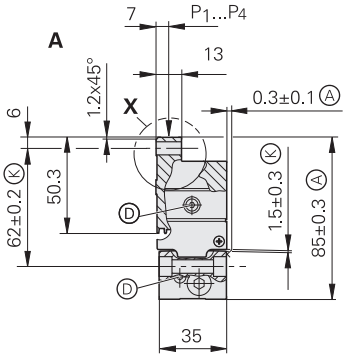

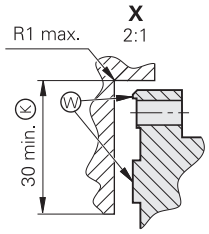

mm

Tolerancing ISO 8015
ISO 2768:1989-mH
≤ 6 mm: ±0.2 mm

Ⅰ, Ⅱ,
Ⅲ = Mounting options
F = Machine guideway
P = Measuring points for alignment
Ⓚ = Required mating dimensions
Ⓐ = Alternative mating dimensions
Ⓑ = Cable connection, usable on either side
Ⓓ = Compressed air inlet usable on either side
Ⓣ = Mechanical fixed point (to be preferred)
Ⓖ = Mechanical fixed point, with spacing interval of 100 mm
Ⓡ = Reference mark position on LS 1x7
Ⓒ = Reference mark position on LS 1x7 C
Ⓢ = Beginning of measuring length (ML)
Ⓦ = Mating surfaces
⇨ = Direction of motion of the scanning unit for ascending position values

Specifications	LS 187	LS 177						
Measuring standard Coefficient of linear expansion	Glass scale with DIADUR grating; grating period: 20 µm $\alpha_{therm} \approx 8 \cdot 10^{-6}\ K^{-1}$							
Accuracy grade*	±5 µm; ±3 µm							
Measuring length (ML)* in mm	140 240 340 440 540 640 740 840 940 1040 1140 1240 1340 1440 1540 1640 1740 1840 2040 2240 2440 2640 2840 3040							
Reference marks* LS 1x7 LS 1x7 C	Selectable with magnets every 50 mm; standard setting: one reference mark in the center Distance-coded							
Interface	∿ 1 V_{PP}	⊓⊔TTL						
Integrated interpolation* Signal period	– 20 µm	5-fold –		10-fold –			20-fold –	
Diagnostics interface	Analog	–						
Cutoff frequency –3 dB	≥ 160 kHz	–		–			–	
Scanning frequency* Edge separation *a*	–	100 kHz ≥ 0.5 µs	50 kHz ≥ 1 µs	100 kHz ≥ 0.25 µs	50 kHz ≥ 0.5 µs	25 kHz ≥ 1 µs	50 kHz ≥ 0.25 µs	25 kHz ≥ 0.5 µs
Measuring step	Depends on interpolation	1 µm[1)]		0.5 µm[1)]			0.25 µm[1)]	
Electrical connection	Separate adapter cable (1 m / 3 m / 6 m / 9 m) connectable on mounting block							
Cable length[2)]	≤ 150 m	≤ 100 m						
Supply voltage without load	DC 5 V ±0.25 V/< 120 mA	DC 5 V ±0.25 V/< 140 mA						
Traversing speed	≤ 120 m/min	≤ 120 m/min	≤ 60 m/min	≤ 120 m/min	≤ 60 m/min	≤ 30 m/min	≤ 60 m/min	≤ 30 m/min
Required moving force	≤ 4 N							
Vibration 55 Hz to 2000 Hz **Shock** 11 ms **Acceleration**	≤ 200 m/s^2 (EN 60068-2-6) ≤ 400 m/s^2 (EN 60068-2-27) ≤ 60 m/s^2 in direction of measurement							
Operating temperature	0 °C to 50 °C							
Protection EN 60529	IP53 when mounted as per the mounting information and instructions IP64 with purge air via DA 400							
Mass	0.4 kg + 2.3 kg/m of measuring length							

* Please select when ordering
1) After 4-fold evaluation in the downstream electronics
2) With HEIDENHAIN cable

LB 383 C up to 3040 mm (single-section)

Incremental linear encoder with full-size scale housing

- **Flat-lying installation possible**

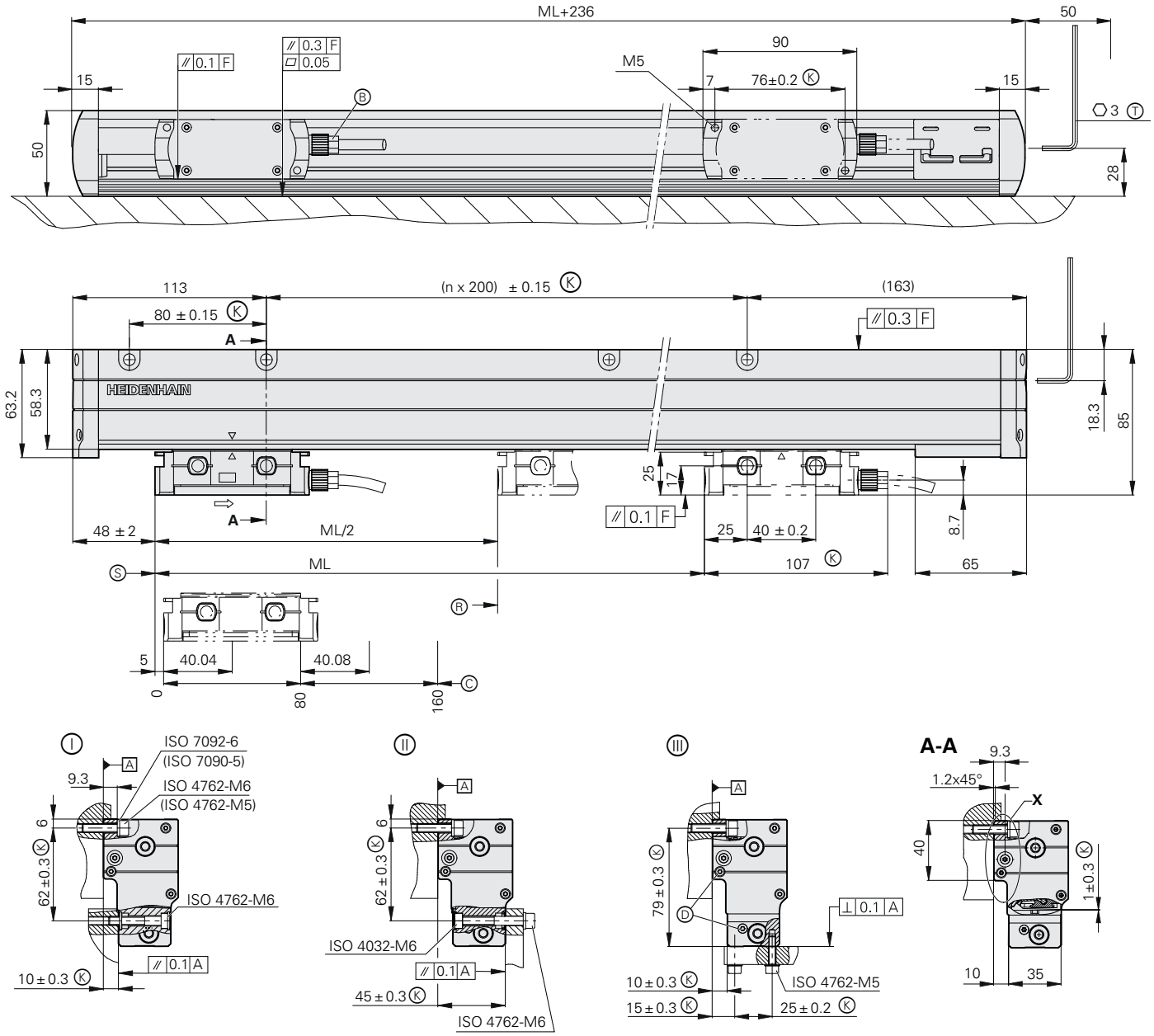

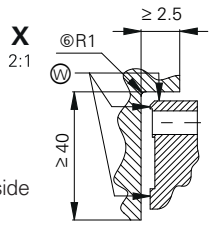

Ⓘ, Ⓘⓘ,
Ⓘⓘⓘ = Mounting options
F = Machine guideway
Ⓚ = Required mating dimensions
Ⓑ = Cable connection, usable on either side
Ⓣ = Tensioning screw for scale tape
Ⓓ = Compressed air inlet with built-in flow regulator, usable on either side
Ⓡ = Reference mark position on LB 383
Ⓒ = Reference mark position on LB 383 C
Ⓢ = Beginning of measuring length (ML)
Ⓦ = Mating surfaces
⇨ = Direction of motion of the scanning unit for output signals in accordance with the interface description
ML = Measuring length

mm
Tolerancing ISO 8015
ISO 2768:1989-mH
≤ 6 mm: ±0.2 mm

Mirrored version

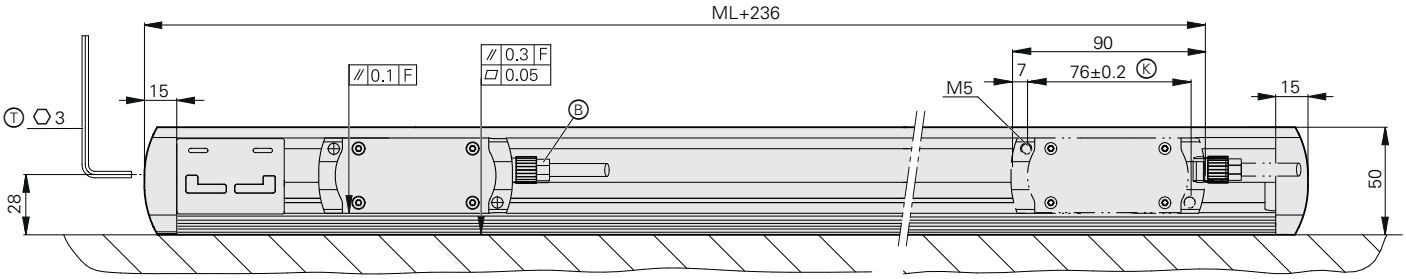

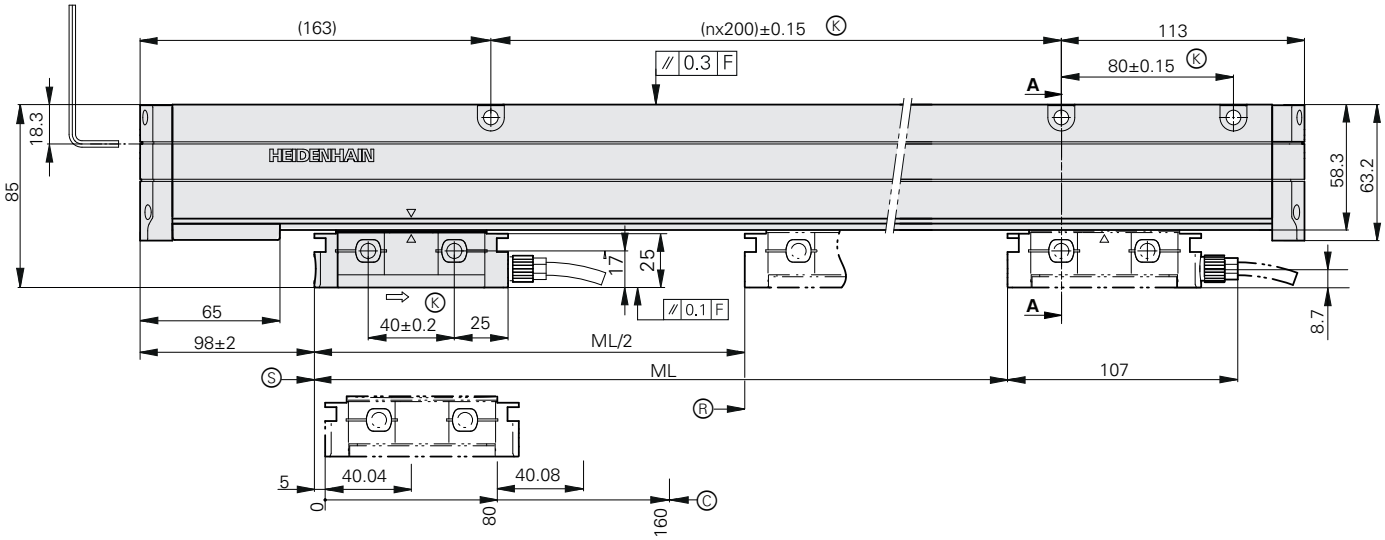

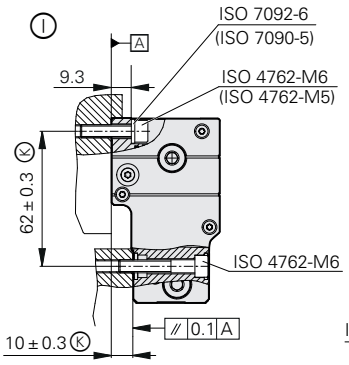

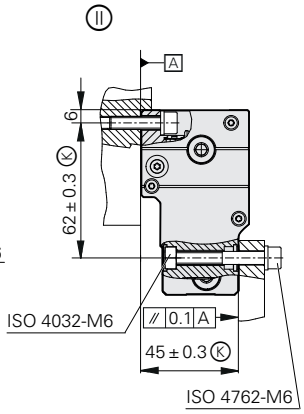

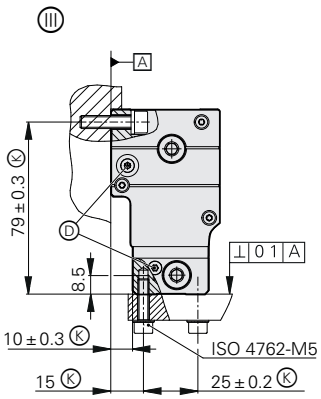

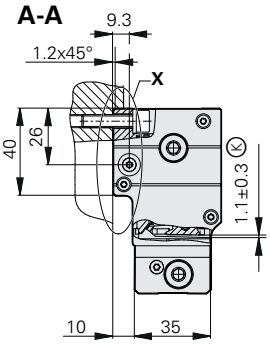

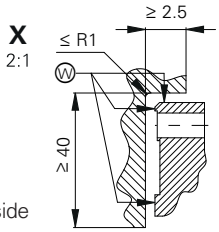

Ⓘ, Ⓘⓘ,
Ⓘⓘⓘ = Mounting options
F = Machine guideway
Ⓚ = Required mating dimensions
Ⓑ = Cable connection, usable on either side
Ⓣ = Tensioning screw for scale tape
Ⓓ = Compressed air inlet with built-in flow regulator, usable on either side
Ⓡ = Reference mark position on LB 383
Ⓒ = Reference mark position on LB 383C
Ⓢ = Beginning of measuring length (ML)
Ⓦ = Mating surfaces
⇨ = Direction of motion of the scanning unit for output signals in accordance with the interface description
ML = Measuring length

mm
Tolerancing ISO 8015
ISO 2768:1989-mH
≤ 6 mm: ±0.2 mm

LB 383 C up to 3040 mm (single section)

Incremental linear encoder with full-size scale housing

- **Flat-lying installation possible**

Specifications	**LB 383 C** up to ML 3040 mm
Measuring standard Coefficient of linear expansion	METALLUR steel scale tape, 40 µm grating period $\alpha_{therm} \approx 10 \cdot 10^{-6}\ K^{-1}$
Accuracy grade	±5 µm
Measuring length (ML)* in mm	Single-section housing 440 640 840 1040 1240 1440 1640 1840 2040 2240 2440 2640 2840 3040
Reference marks LB 383 C	Distance-coded
Interface	∿ 1 V_{PP}
Signal period	40 µm
Diagnostics interface	Analog
Cutoff frequency –3 dB	≥ 250 kHz
Electrical connection	Separate adapter cable (1 m / 3 m / 6 m / 9 m), connectable at either end of mounting block
Cable length[1)]	≤ 150 m
Supply voltage without load	DC 5 V ±0.25 V/< 150 mA
Traversing speed	≤ 180 m/min (max. acceleration in the direction of measurement ≤ 100 m/s^2)
Required moving force	≤ 15 N
Vibration 55 Hz to 2000 Hz acting on **Shock** 11 ms	Housing: 200 m/s^2 (EN 60068-2-6) Scanning unit: 300 m/s^2 (EN 60068-2-6) ≤ 300 m/s^2 (EN 60068-2-27)
Operating temperature	0 °C to 50 °C
Protection EN 60529	IP53 when mounted as per the mounting information and instructions IP64 with purge air via DA 400
Mass	1.3 kg + 3.6 kg/m of measuring length

* Please select when ordering
1) With HEIDENHAIN cable

HEIDENHAIN

LB 383 C up to 30 040 mm (multi-section)

Incremental linear encoder with full-size scale housing

- **Measuring lengths of up to 30 m (up to 72 m upon request)**
- **Flat-lying installation possible**

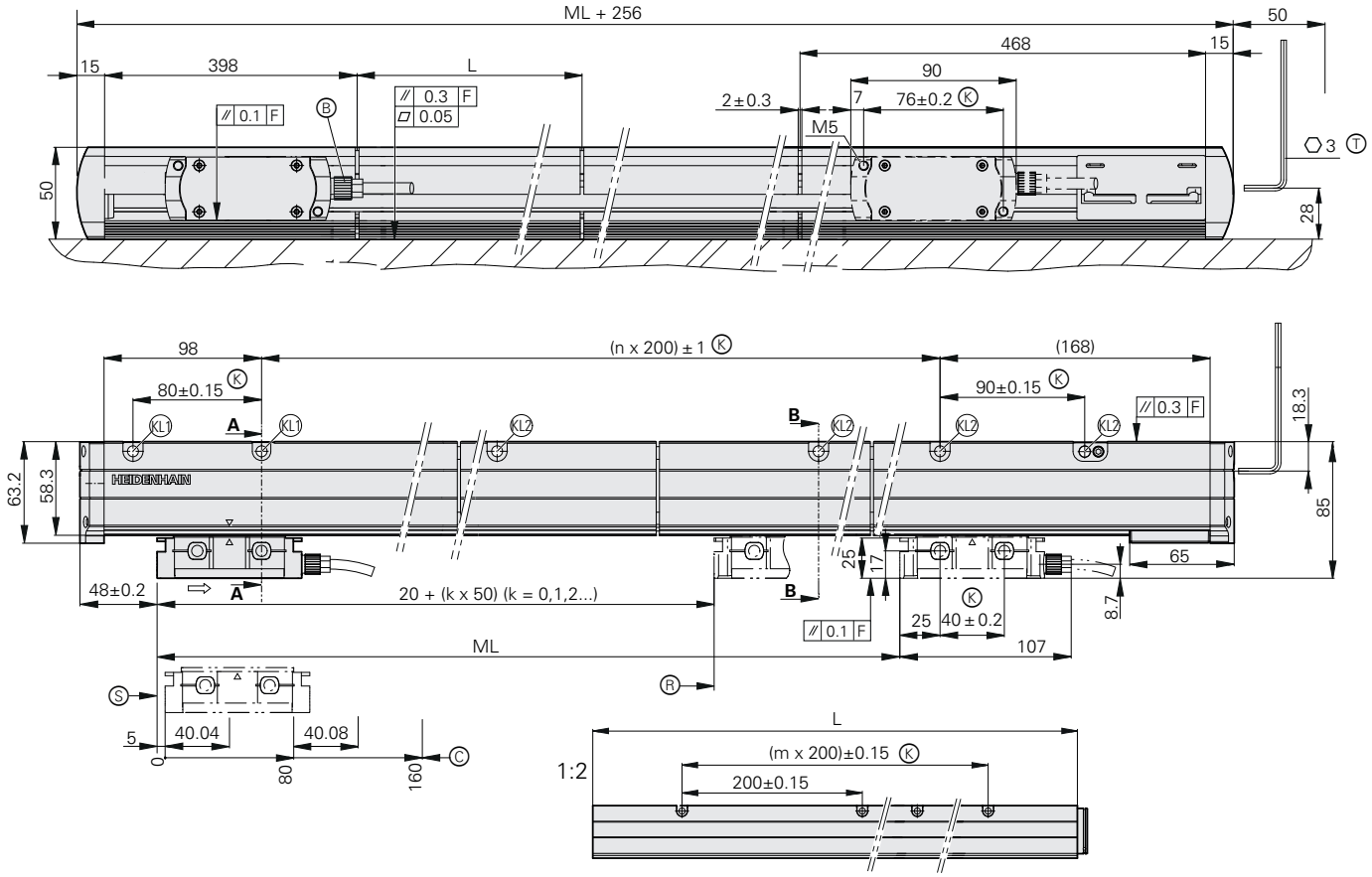

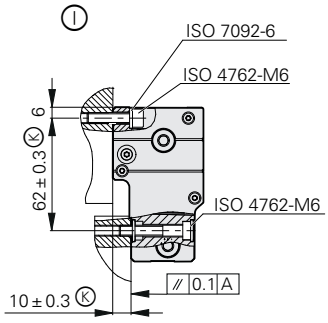

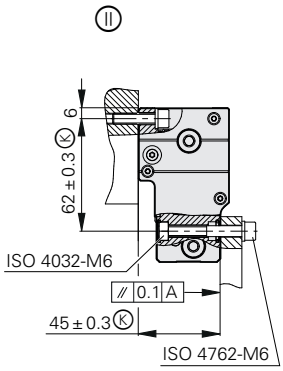

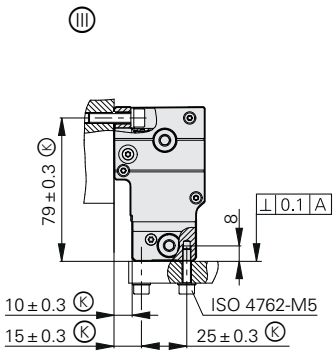

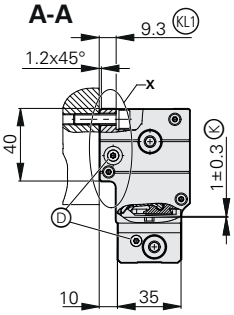

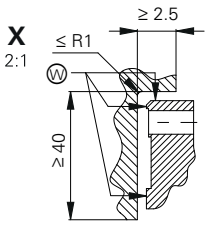

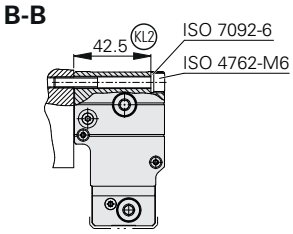

Ⓘ, Ⓘⓘ, Ⓘⓘⓘ = Mounting options
F = Machine guideway
Ⓚ = Required mating dimensions
Ⓑ = Cable connection, usable on either side
Ⓓ = Compressed air inlet with built-in flow regulator, usable on either side
Ⓡ = Reference mark position on LB 383
Ⓒ = Reference mark position on LB 383 C
Ⓢ = Beginning of measuring length (ML)
Ⓦ = Mating surfaces
KL1 KL2 = Clamping length
⇨ = Direction of motion of the scanning unit for output signals in accordance with the interface description
ML = Measuring length
L = Length of housing section

mm
Tolerancing ISO 8015
ISO 2768:1989-mH
≤ 6 mm: ±0.2 mm

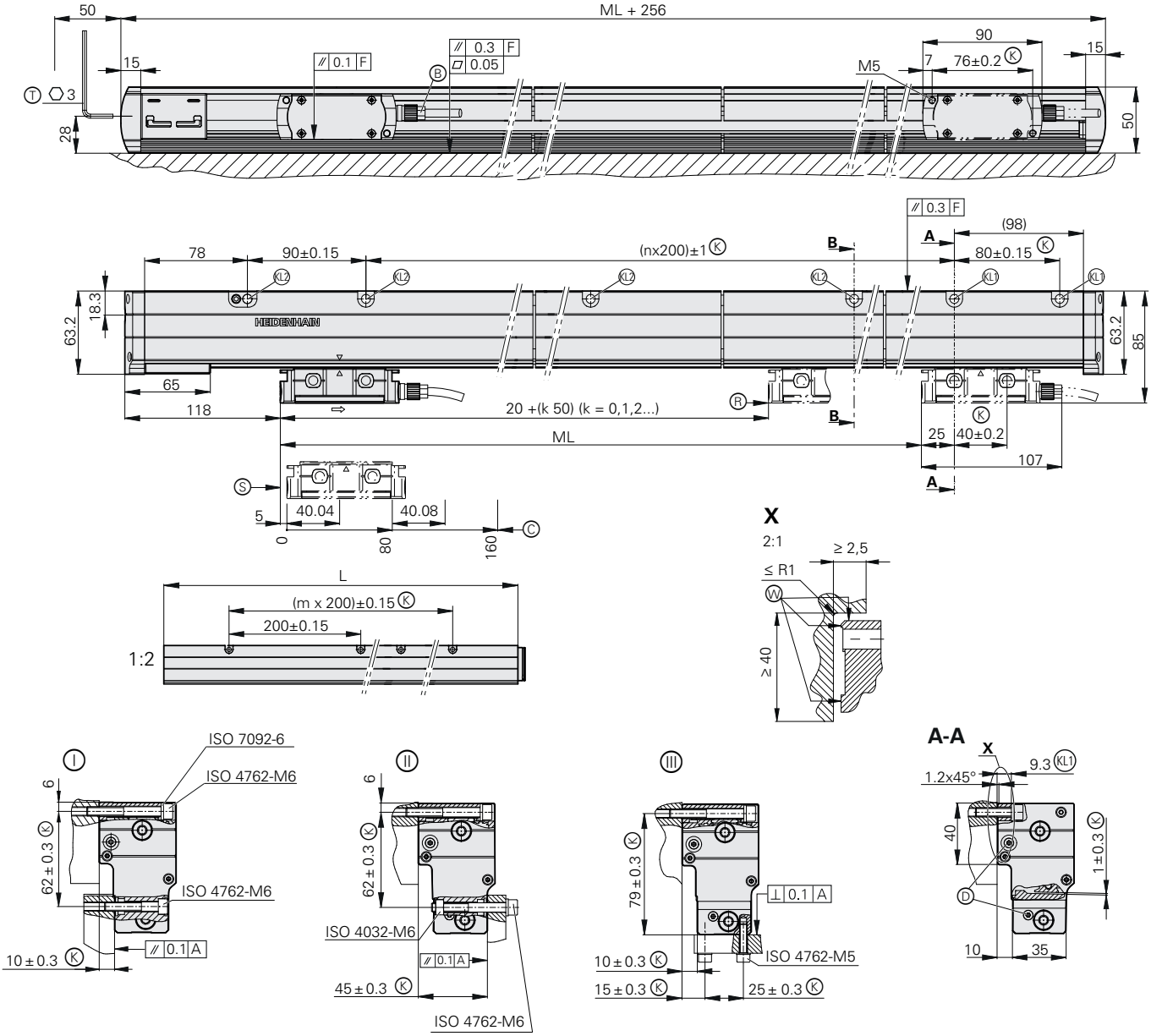

Ⓘ, Ⓘⓘ,
Ⓘⓘⓘ = Mounting options
F = Machine guideway
Ⓚ = Required mating dimensions
Ⓑ = Cable connection, usable on either side
Ⓣ = Tensioning screw for scale tape
Ⓓ = Compressed air inlet with built-in flow regulator, usable on either side
Ⓡ = Reference mark position on LB 383
Ⓒ = Reference mark position on LB 383C
Ⓢ = Beginning of measuring length (ML)
Ⓦ = Mating surfaces
KL1 KL2 = Clamping length
⇨ = Direction of motion of the scanning unit for output signals in accordance with the interface description
ML = Measuring length
L = Length of housing section

mm
Tolerancing ISO 8015
ISO 2768:1989-mH
≤ 6 mm: ±0.2 mm

LB 383 C up to 30 040 mm (multi-section)

Incremental linear encoder with full-size scale housing

- **Measuring lengths of up to 30 m (up to 72 m upon request)**
- **Flat-lying installation possible**

Specifications	**LB 383 C** starting from ML 3240 mm
Measuring standard Coefficient of linear expansion	METALLUR steel scale tape, 40 µm grating period Same as machine main casting
Accuracy grade	±5 µm
Measuring length ML*	Kit with single-section METALLUR scale tape and housing sections Measuring lengths (ML) from 3240 mm to 30 040 mm in 200 mm steps (up to 72 040 mm upon request)
Reference marks* LB 383 C	Distance-coded
Interface	∿ 1 V_{PP}
Signal period	40 µm
Diagnostics interface	Analog
Cutoff frequency –3 dB	≥ 250 kHz
Electrical connection	Separate adapter cable (1 m / 3 m / 6 m / 9 m), connectable at either end of mounting block
Cable length[1)]	≤ 150 m
Supply voltage without load	DC 5 V ±0.25 V/< 150 mA
Traversing speed	≤ 180 m/min (max. acceleration in the direction of measurement ≤ 100 m/s^2)
Required moving force	≤ 15 N
Vibration 55 Hz to 2000 Hz **Shock** 11 ms	≤ 300 m/s^2 (EN 60068-2-6) ≤ 300 m/s^2 (EN 60068-2-27)
Operating temperature	0 °C to 50 °C
Protection EN 60529	IP53 when mounted as per the mounting information and instructions IP64 with purge air via DA 400
Mass	1.3 kg + 3.6 kg/m of measuring length

* Please select when ordering
[1)] With HEIDENHAIN cable

HEIDENHAIN

Diagnostics, and inspection and testing devices

HEIDENHAIN encoders provide all of the information needed for setup, monitoring, and diagnostics. The type of information available depends on whether the encoder is incremental or absolute and which interface is being used.

Incremental encoders have 1 V_{PP}, TTL, or HTL interfaces. TTL and HTL encoders monitor their signal amplitudes internally and generate a simple fault-detection signal. With 1 V_{PP} signals, an analysis of the output signals is possible only with external testing devices or through the use of computation resources in the downstream electronics (**analog diagnostic interface**).

Absolute encoders employ serial data transmission. Depending on the interface, 1 V_{PP} incremental signals can also be output. The signals are extensively monitored within the encoder. The monitoring results (particularly valuation numbers) can be transmitted to the downstream electronics along with the position values via the serial interface (**digital diagnostic interface**). The following information is available:

- Error message: position value is not reliable
- Warning: an internal functional limit of the encoder has been reached
- Valuation numbers:
  - Detailed information about the encoder's function reserve
  - Identical scaling for all HEIDENHAIN encoders
  - Cyclic reading capability

This enables the downstream electronics to evaluate the current status of the encoder with little effort, even in closed-loop mode.

For the analysis of these encoders, HEIDENHAIN offers the appropriate PWM inspection devices and PWT testing units. Based on how these devices are integrated, a distinction is made between two types of diagnostics:

- Encoder diagnostics: the encoder is connected directly to the testing or inspection device, thereby enabling a detailed analysis of the encoder's functions.
- Monitoring mode: the PWM inspection device is inserted within the closed control loop (via suitable testing adapters as needed). This enables real-time diagnosis of the machine or equipment during operation. The available functions depend on the interface.

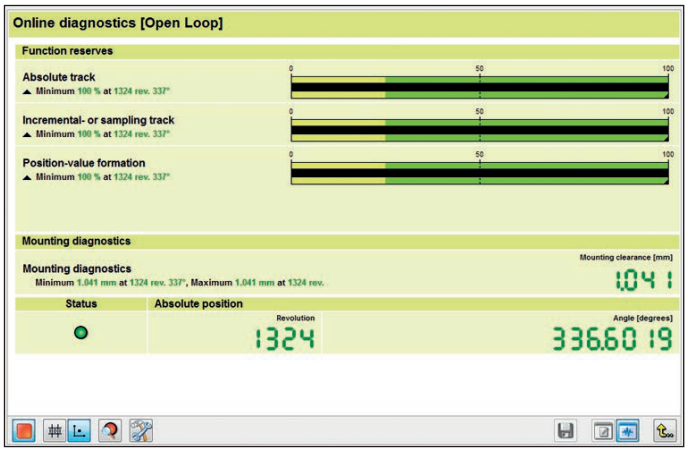

Diagnostics with the PWM 21 and ATS software

Initial setup with the PWM 21 and ATS software

Further information:

For detailed descriptions regarding diagnostics, inspection devices, and testing devices, refer to the *Interfaces of HEIDENHAIN Encoders* brochure.

Related documents

Further HEIDENHAIN products

Brochure
Cables and Connectors

Contents:
Technical characteristics, cable overviews, and cable lists

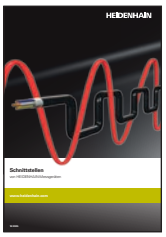

Brochure
Interfaces of HEIDENHAIN Encoders

Contents:
Information on serial interfaces, sinusoidal signals, square-wave signals, and commutation signals

Brochures
TNC 128 Straight-Cut Control
TNC 320 Contouring Control
TNC 620 Contouring Control
TNC 640 Contouring Control
TNC7 Contouring Control

Contents:
Information for end users

OEM brochures
TNC 128 Straight-Cut Control
TNC 320 Contouring Control
TNC 620 Contouring Control
TNC 640 Contouring Control
TNC7 Contouring Control

Contents:
Information for machine manufacturers

Brochures
MANUALplus 620 Contouring Control
CNC PILOT 640 Contouring Control

Contents:
Information for end users

OEM brochures
MANUALplus 620 Contouring Control
CNC PILOT 640 Contouring Control

Contents:
Information for machine manufacturers

Brochure
Encoders for Servo Drives

Contents:
Rotary encoders
Angle encoders
Linear encoders

Brochure
Angle Encoders with Integral Bearing

Contents:
Absolute angle encoders
RCN, ECN
Incremental angle encoders
RON, RPN, ROD

Product Information
LC 116, LC 196,
LC 416, LC 496
Absolute linear encoders with optimized scanning

Brochure
Modular Angle Encoders
with Scale Drum or Scale Tape

Contents:
Incremental angle encoders
ECA, ERA, ECM, ERM

Brochure
Touch Probes

Contents:
Tool touch probes
TT
Workpiece touch probes
TS

Brochure
Measuring Devices For Machine Tool Inspection and Acceptance Testing

Contents:
Incremental linear encoders
KGM, VM

HEIDENHAIN

Mastering nanometer accuracy

HEIDENHAIN

DR. JOHANNES HEIDENHAIN GmbH
Dr.-Johannes-Heidenhain-Straße 5
83301 Traunreut, Germany
☏ +49 8669 31-0
FAX +49 8669 32-5061
info@heidenhain.de

www.heidenhain.com

HEIDENHAIN worldwide

571470-2L · 03/2026 · CD · Printed in Germany