Linear Encoder

NC Linear Scale Systems

Catalog No. E13005(3)

Mitutoyo

AMI
Automation and Metrology
8808 Tyler Blvd, Mentor, OH 44060
1-888-354-2525 | sales@auto-met.com
Request a quote: auto-met.com

Integrated Production System for...

The Utsunomiya Operations Kiyohara Plant presents a complete manufacturing environment where linear encoders for Mitutoyo measuring equipment as well as linear scales for the general market are produced. The whole production process including the manufacturing of glass scales for linear encoders, assembly of electronic components and products, and inspection is performed here. Conditions are continuously being optimized for further enhanced scale accuracy and even higher quality. The underground research laboratory at the Kiyohara Plant has been specially designed and constructed to provide the environment required for the high-level scale graduation process as well as for high-accuracy measurements. Located on a solid bedrock foundation nine meters underground, the facility maintains a stable and tightly controlled environment all year round. Temperature and humidity fluctuations as well as external vibrations are kept to an absolute minimum. In this laboratory, we produce master scales, perform accuracy evaluation, and pursue various kinds of research that provide the underpinning for the accuracy and quality of our linear scales.

Sputtering equipment

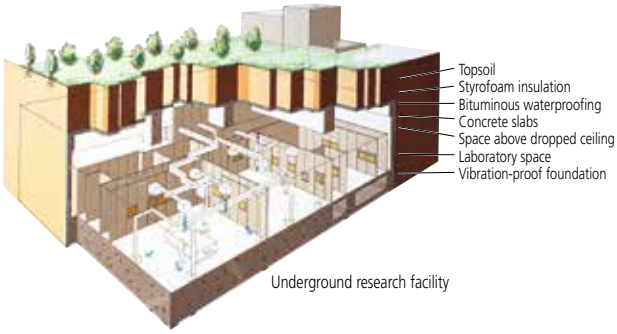

Underground research facility

Linear Encoder Accuracy Calibration Technology

To assure high accuracy in linear encoders, a highly reliable calibration system is indispensable.
The ultra-precision length measuring machine developed by Mitutoyo and installed in the underground research facility at the Kiyohara Plant benefits from the highly stable underground environment. In addition, the light path of the laser interferometer used to measure lengths is placed in a vacuum to further eliminate any causes of uncertainty. The result is a linear encoder calibration system of world-leading precision, internationally recognized by mutual interlaboratory comparisons. In recognition of the high technological standard realized by this system, it received the Best Paper Award of the Japan Society of Precision Engineering in 2004 and the FA Paper Award of the General Incorporated Foundation in 2005.

Linear Scale Traceability System Chart

Linear Scales from Mitutoyo are traceable to national standards

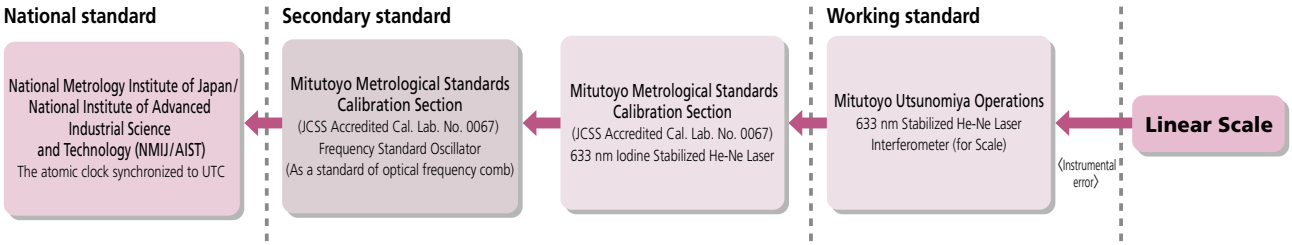

Mitutoyo

Linear Scale is a registered trademark of Mitutoyo Corporation for its linear encoder products.

NC Linear Scale Systems

Detection Principle — 4, 5
NC Linear Scale Systems – System Diagram — 6
NC Linear Scale Systems – Overview — 7
Separate Type **ST** Series
- **ST36** — 8–11
- **ST46-EZA** — 12–19

Assembly Type **AT** Series
- **AT113** — 20, 21
- **AT211** — 22–27

Interface Unit
- **PSU-200** — 28, 29
- **PSU-250** Series — 30, 31

Absolute Scale Unit — 32, 33
- **ABS ST700** Series — 34–39
- **ABS ST1300** Series — 40–49
- **ABS AT1100** Series — 50–59
- **ABS AT1300** Series — 60–67

Discontinued models and succession models specification compatibility tables — 68
Handling linear scales — 69
Specifications of Air Supply Unit for AT Scale — 70, 71
Technical Information — 72–75

Linear Scale is a registered trademark of Mitutoyo Corporation for its linear encoder products.

Applications

Semiconductor fabrication equipment

AT Series - Reference

Dicing saw positioning

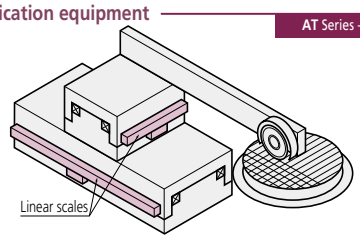

Lithography equipment

ST Series - Reference

Scanning stage positioning

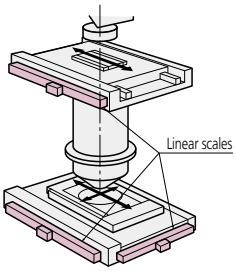

Electron microscope

ST Series - Reference

Mask observation, circuit pattern measurement, defect inspection, etc.

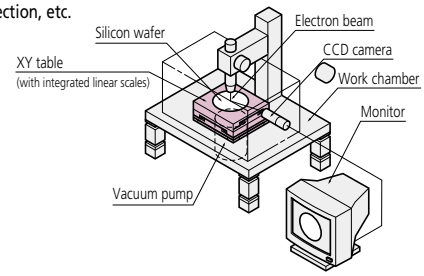

Various NC machine tools

AT Series - Reference

High-precision fully closed loop control

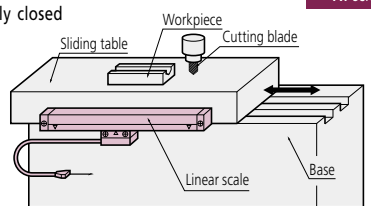

Electronic component mounting equipment

ST Series - Reference

High-speed, high-precision mounting of electronic components

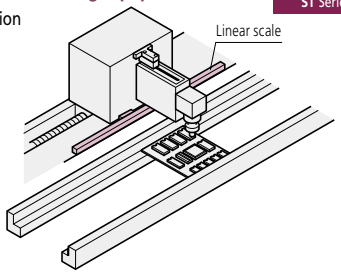

FPD inspection equipment

ST Series - Reference

Defect inspection and repair position determination

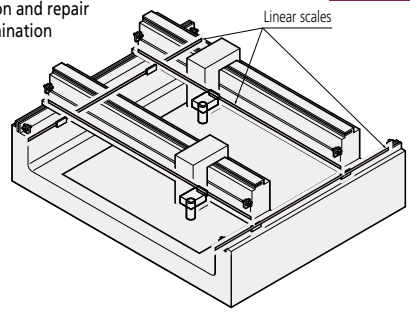

Detection Principle

Detection principle of the transmission optical scale (Assembly Type Linear Scale)

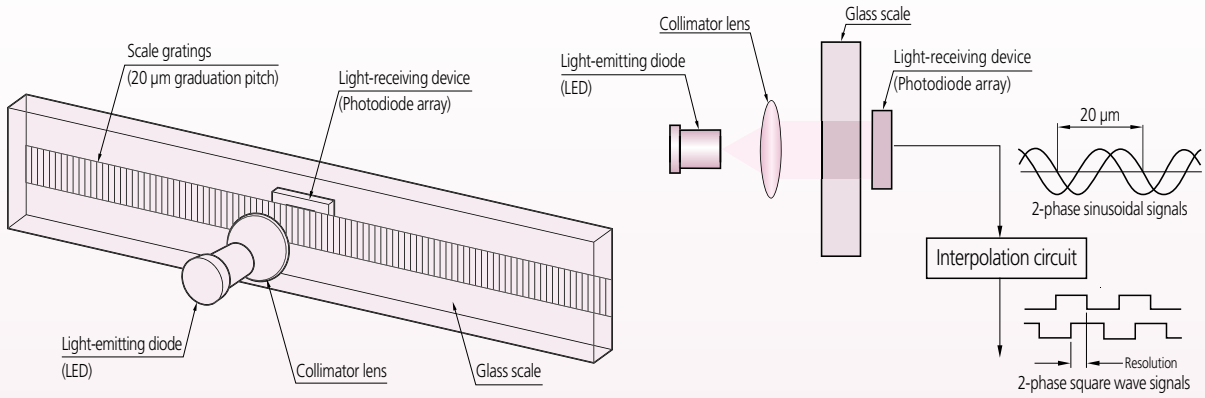

The assembly type linear scale uses a graduated glass scale as measuring length reference. A light-emitting diode (LED) and light-receiving device mounted on opposite sides of the scale serve to detect produce and detect changes in light intensity and output a value representing the displacement magnitude. Because the change in transmitted light intensity of the glass scale is converted into an electrical signal, the setup is called a transmission optical system.

A parallel light beam generated by the LED and collimator lens is directed through the scale gratings. A light-receiving device consisting of a photodiode array on the other side of the scale receives the parallel light beam and produces interference fringes with a cycle that corresponds to the scale grating pitch. When the glass scale is displaced in the measuring direction, the interference fringes shift, and a 2-phase sinusoidal signal with a cycle that corresponds to the 20 µm pitch of the scale gratings is output by the light-receiving device.

An interpolation circuit electrically divides the output sinusoidal signal, resulting in a square wave (pulse) signal representing the limiting resolution.

Detection principle of the reflective optical scale (ST36, etc.)

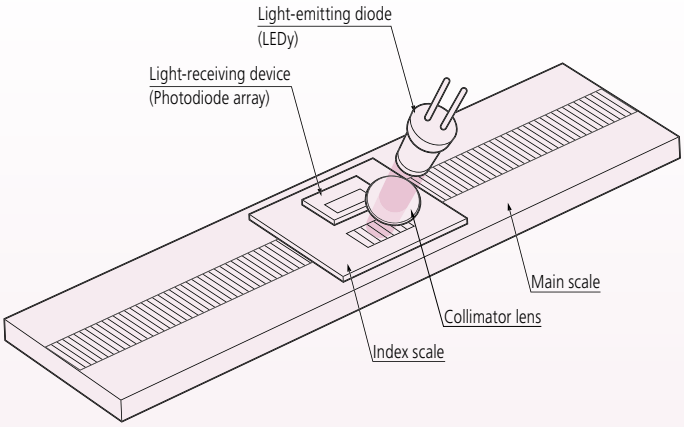

The separate type optical linear scale also uses a graduated glass scale as measuring length reference. An LED and light-receiving device together with gratings on an index scale produce and detect changes in light intensity and output a value representing the displacement magnitude. Because the change in reflected light intensity of the glass scale is converted into an electrical signal, the setup is called a reflective type optical system.

A parallel light beam generated by the LED and collimator lens is directed onto the index scale gratings and the glass scale gratings. The light reflected from the scale gratings produces interference fringes on the photodiode array of the light-receiving device. When the glass scale is displaced in the measuring direction, the interference fringes shift, and a sinusoidal signal with a cycle that is the same as, or one-half of, the scale grating pitch is output by the light-receiving device.

Detection principle of electromagnetic induction scale (ABS ST700, ABS AT1100)

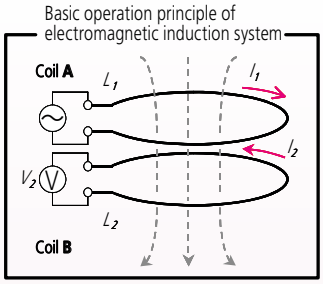

[Figure 1] Electromagnetic induction system encoder principle

When a current (I_1) that changes over time is passed through coil A, a magnetic flux is created in the vicinity of coil A.
This causes an inductive current (I_2) to flow in coil B, in a direction that cancels out the magnetic field.

Magnetic permeability between coils is largely identical in air, water, or oil.

Electromagnetic induction type sensor has excellent water resistance and oil resistance.

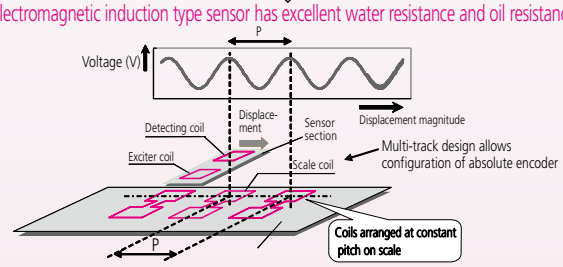

[Figure 2] Detection principle of electromagnetic induction scale

Electromagnetic induction is a phenomenon that occurs, for example, when two coils are arranged facing each other, as shown in Figure 1, and a time-varying current (I_1) is passed through coil A. This will cause an induced current (I_2) to flow in coil B, in a direction that cancels out the magnetic field.
The electromagnetic induction type linear scale uses this phenomenon to convert a displacement magnitude into an electrical signal. The operational principle of the sensor section is shown in Figure 2. A number of scale coils are arranged with precise spacing on the main scale. The moveable sensor section that detects displacement carries an exciter coil and a corresponding detector coil. A current is sent through the exciter coil, thereby creating a magnetic flux that induces a current in the facing scale coil. The magnetic flux created in turn by that current induces a current in the facing detector coil. The degree of inductive coupling between the coils changes according to the displacement magnitude of the sensor section, allowing a sinusoidal signal with a cycle that corresponds to the pitch of the scale coils to be obtained.
By using an electrical circuit that performs interpolation (division) of this sinusoidal signal, displacement can be measured with fine resolution.

Two-sided Telecentric Optical System Principle (ABS ST1300, ABS AT1300)

Linear encoder equipped with two-sided telecentric optical system imaging

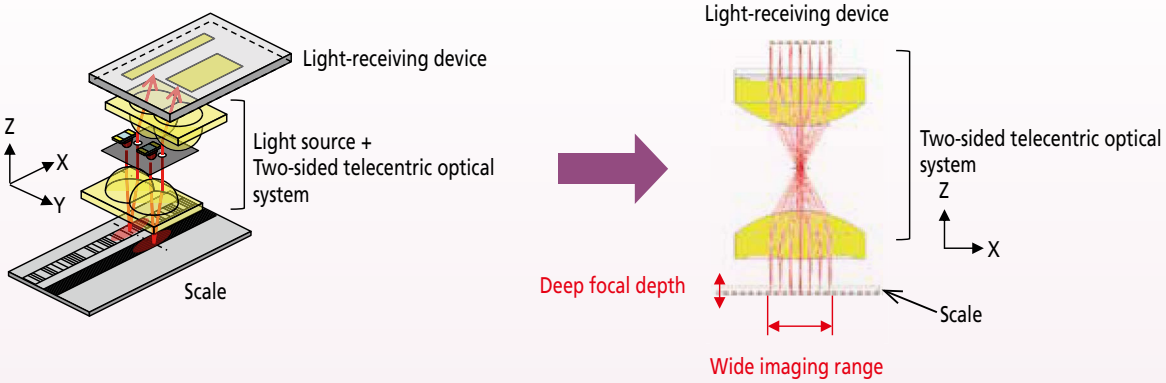

Detection Principle

- The scale grating is captured as an image with the two-sided telecentric optical system and its displacement is detected with a light- receiving device.

Features

- Adoption of a two-sided telecentric imaging optical system ⇒ Improves the robustness of the encoder.
  - The deep focal depth ⇒ Extends allowance for GAP variation (scale waviness and stage orientation variation, detector mounting variation, etc.).
  - The wide imaging range ⇒ Extends allowance for contamination, slight damage, etc. on the scale.

NC Linear Scale Systems – System Diagram

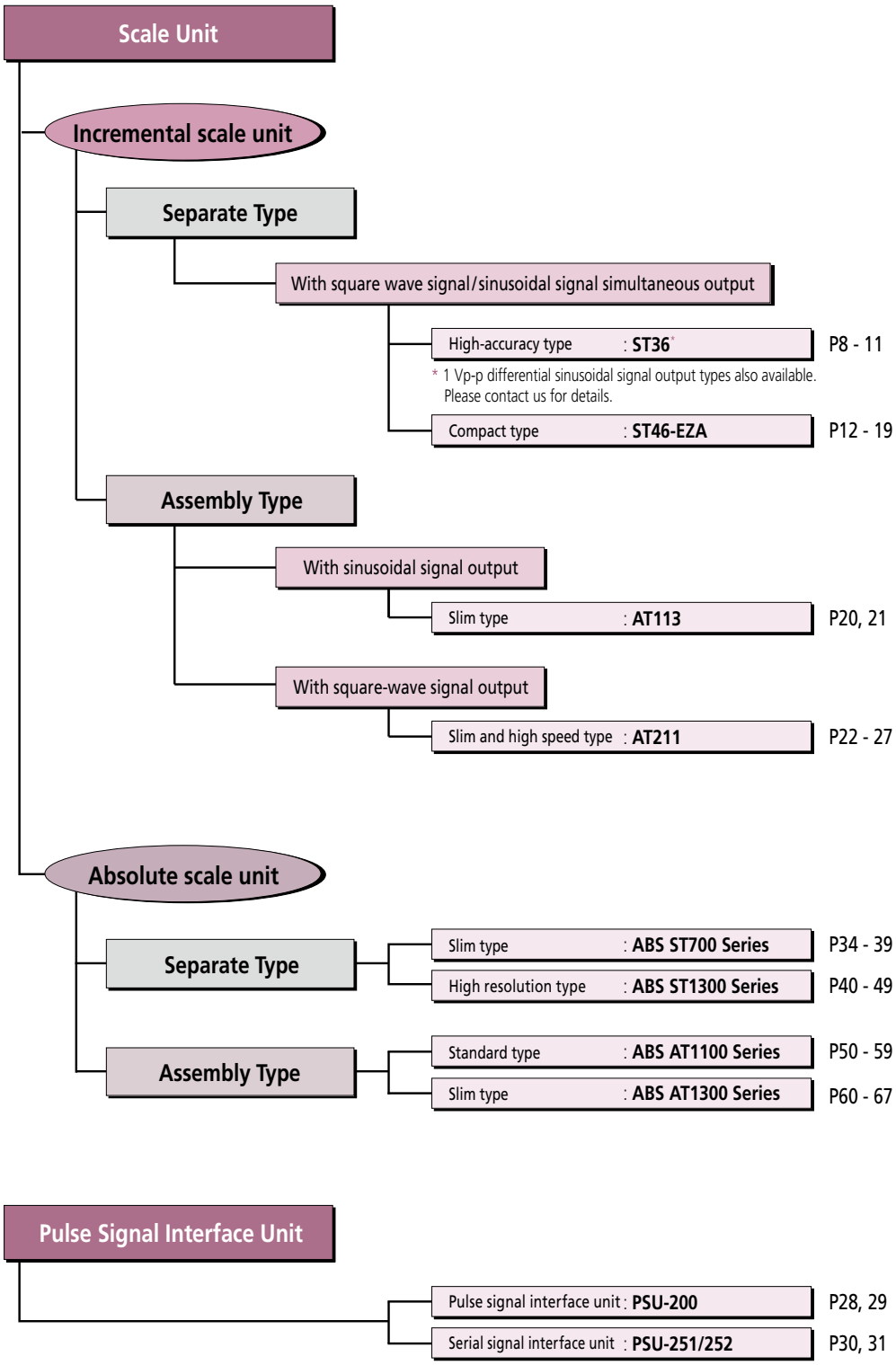

Mitutoyo

NC Linear Scale Systems – Overview

	Model	Reference point	Absolute function	Output signal cycle of sinusoidal signal (μm)	Signal unit	No. of divisions	Resolution (μm)	Maximum response speed*1 (mm/s)	Minimum edge interval*2 (ns)	See page
Separate Type Linear Scales	ST36B ST36C (ST36A) (ST36D)	Yes	—	4	— (PSU-200)	400	0.01	70	125	P8 - 11
						200	0.02	150		
						80	0.05	360		
						40	0.1	720		
	ST46-EZA	Yes	—	20	—	400	0.05	450	100	P12 - 19
						200	0.1	900		
						40	0.5	2600		
						20	1	2600		
						4	5	2600		
	ABS ST700	—	Yes	—	—	—	0.1	5000	—	P34 - 39
	ABS ST1300	—	Yes	—	—	—	0.001	8000*3	—	P40 - 49
							0.01			
Assembly Type Linear Scales	AT113	Yes	—	20	PSU-200	200	0.1	800	125	P20, 21
						100	0.2	1600		
						80	0.25	2000		
						40	0.5			
						20	1			
						10	2			
						8	2.5			
						4	5			
	AT211	Yes	—	20	—	200	0.1	710	125	P22 - 27
						100	0.2	1400		
						40	0.5	2000		
						20	1		250	
						8	2.5		500	
						4	5		1000	
	ABS AT1100	—	Yes	—	—	—	0.05	3000	—	P50 - 59
	ABS AT1300	—	Yes	—	—	—	0.001	3000	—	P60 - 67
							0.01			
							0.05			

*1 Maximum response speed of pulse output type uses the logical value (IC specification) with a margin of about 10%, and is limited depending on the scale response speed and resolution.
*2 For information on minimum edge interval, see "Explanation of Terms" on page 74.
The guaranteed value for minimum edge interval is +0%, -10%.
For some models, values other than shown above can also be selected.
*3 It depends on the interface.

Separate Type ST Series

Sinusoidal Siqnal & Square-Wave Signal Output Scale Unit (High Accuracy Type)

ST36

Features

- High accuracy type, 0.5 µm class (effective range up to 300 mm)
- Has a thinner detector head (thickness 11.5 mm).
- The maximum effective measurement range of 3000 mm enables use on large machines.
- 4 different types available for each signal output specification.
- LED display function for indicating signal errors.

Specifications

Item / Model	ST36A	ST36B	ST36C	ST36D
Detection method	Reflective optical linear encoder			
Main scale grating pitch	8 µm			
Signal output pitch	4 µm			
Output signal	2-phase sinusoidal signals	2-phase square wave signals (reset input type)	2-phase square wave signals 2-phase sinusoidal signals	1 Vp-p differential sinusoidal signals
Effective range	10 to 3000 mm			
Accuracy (20 °C)	Effective range 10 to 300 mm : ±0.5 µm Effective range 350 to 500 mm : ±1.0 µm Effective range 600 to 1000 mm : ±2.0 µm Effective range 1100 to 3000 mm : ±2.0 µm/m			
Thermal expansion coefficient	$\approx 8\times10^{-6}$/K			
Maximum response speed	1200 mm/s (with sinusoidal signals output) Note: For 2-phase square wave signal types, see page 10			
Scale reference point*	With scale reference point (50 mm pitch, 10 to 80 mm: Center point)			
Power supply	5 VDC ±5%			
Maximum current consumption	120 mA	250 mA		190 mA
Operating temperature/humidity	0 to 40 °C, 20 to 80%RH (no condensation)			
Storage temperature/humidity	-20 to 60 °C, 20 to 80%RH (no condensation)			
Alarm indication	A scale alarm is indicated with an LED on the I/F box			

* Maximum speed for scale reference point detection is 20 mm/s.

Parts

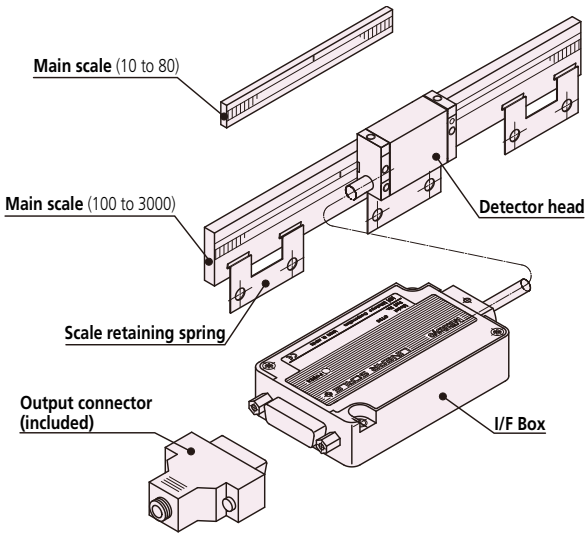

Alarm reset transmission / reception signal circuit (B Type)

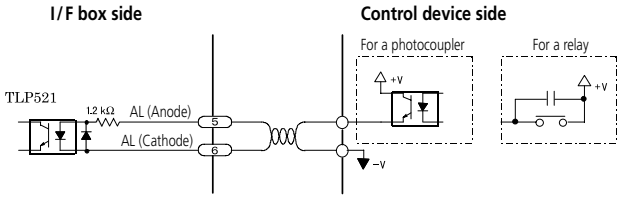

Reset input
Connect the alarm reset input circuit so that the current is 3 to 10 mA. Also, the device has an internal resistor (1.2 kΩ), so by applying 5 to 12 V with a pulse width of at least 10 ms across AL (anode)-AL (cathode), the alarm can be reset. When applying 12 V or more, add an external resistance to limit the current to within the range stated above.

Mitutoyo

Output signal waveform

• 2-phase sinusoidal signals (Type A, C)

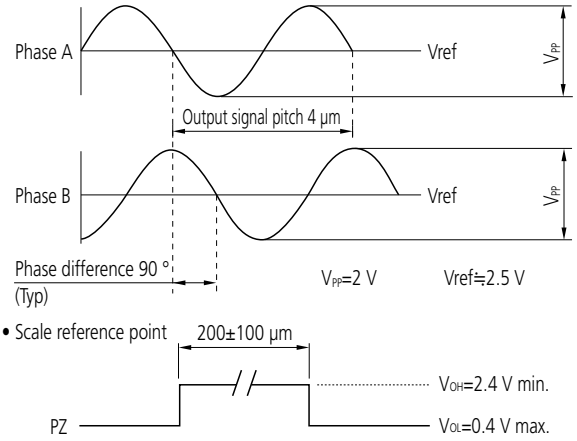

Note: The phase difference between the PZ signal and the Phase A signal (and the Phase B signal) are not defined.

• 2-phase square wave signals (Type B, C)

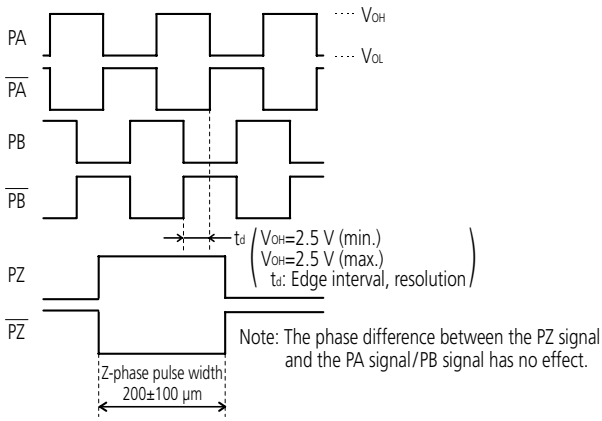

Note: The phase difference between the PZ signal and the PA signal/PB signal has no effect.

• 1 Vpp differential sinusoidal signals (Type D)

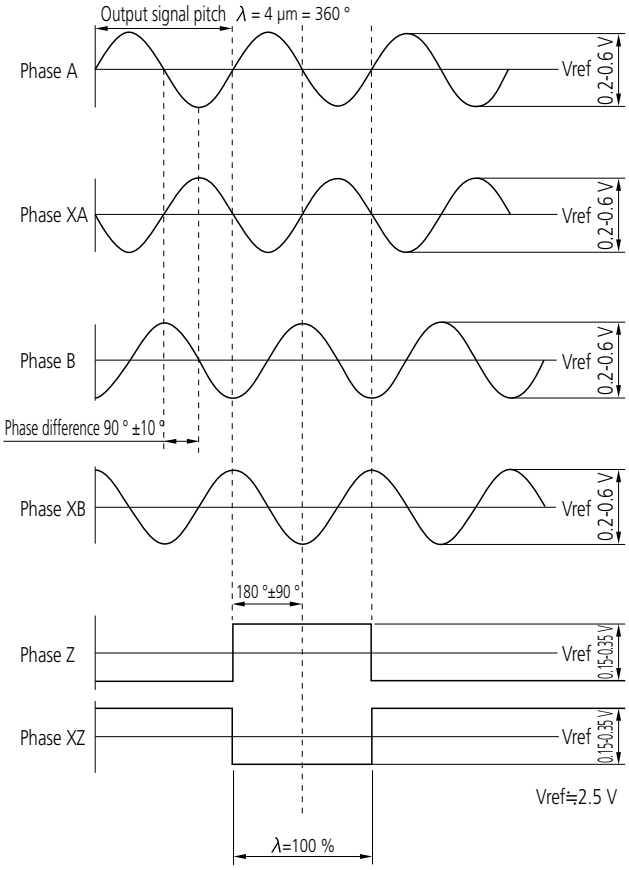

Output specification

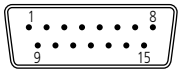

1. Output connector specification (Type A, B, C)
   - Output connector (pin type): RDAD-15P-LNA(05) (Hirose Electric or equivalent)
   - Applicable connector (standard accessory): D15-403N-110 (Technical Electron or equivalent)

2. Output connector specification (Type D)
   - Output connector (pin type): RDAD-15P-LNA(05) inch screws (Hirose Electric or equivalent)
   - Applicable connector (standard accessory): D15-403N-150 inch screws (Technical Electron or equivalent)

Pin No.	Type A Signal	Type B Signal	Type C Signal	Type D Signal
1	0 V (GND)	0 V (GND)	0 V (GND)	Phase XA
2	0 V (GND)	0 V (GND)	0 V (GND)	Phase XB
3	+5 V	+5 V	+5 V	Phase Z
4	+5 V	+5 V	+5 V	+5 V (V_{DD})
5	Phase A	Reset input (anode)	Phase A	+5 V (V_{DD})
6	Phase B	Reset input (cathode)	Phase B	N.C
7	Vref	Vref	Vref	N.C
8	PZ (scale reference point)	PZ (scale reference point)	PZ (scale reference point)	N.C
9	N.C	$\overline{ALM}$ (alarm, negative logic)	$\overline{ALM}$ (alarm, negative logic)	Phase A
10	Vref	PA	PA	Phase B
11	N.C	$\overline{PA}$	$\overline{PA}$	Phase XZ
12	N.C	PB	PB	0 V (GND)
13	N.C	$\overline{PB}$	$\overline{PB}$	0 V (GND)
14	N.C	$\overline{PZ}$	$\overline{PZ}$	N.C
15	F.G	F.G	F.G	0 V (GND)

Specification Selection Method

- There is an extensive selection of specifications for ST36.
- Choose the appropriate numbers and letters below according to specification required.
  If standard specifications (recommended items marked with ●/◎ symbols below) meet your requirements, please order using Order No. and Model No. shown on page 11.

Meaning of Model No.

ST36 □ - □□□□□ - □□□ - □ - □

Signal output

Code	Output
A	Sinusoidal signal
B	Square wave signal + External reset input
C	Sinusoidal signal + Square wave signal
D	1 Vpp differential

Effective range

Code	Effective range (mm)	Code	Effective range (mm)
0010	10	0900	900
0025	25	1000	1000
0050	50	1100	1100
0075	75	1200	1200
0080	80	1300	1300
0100	100	1400	1400
0150	150	1500	1500
0200	200	1600	1600
0250	250	1700	1700
0300	300	1800	1800
0350	350	2000	2000
0400	400	2200	2200
0450	450	2400	2400
0500	500	2500	2500
0600	600	2600	2600
0700	700	2800	2800
0800	800	3000	3000

Note: For the standard specification, the indicated effective range depends on the product code.
Example of standard specification
Effective range 10 mm: **ST36□-0010**
Effective range 250 mm: **ST36□-0250**

Scale reference point

Code	Effective range 10 to 80 μm
●B	Center point (10 to 80)
Z	Special position specification

Code	Effective range 100 to 3000 mm
●A	50 mm pitch
B	Center point
Z	Special position specification

Note: For reference positions in the effective range of 10 to 80 mm, [B: Center point] is the standard specification.

Resolution / Minimum edge interval

Resolution \ Minimum edge interval	125 ns	250 ns	500 ns	1000 ns
0.01 μm	A: 70 mm/s	B: 30 mm/s	C: 15 mm/s	D: 8 mm/s
0.02 μm	E: 150 mm/s	F: 70 mm/s	G: 30 mm/s	H: 15 mm/s
0.05 μm	J: 360 mm/s	K: 180 mm/s	L: 90 mm/s	M: 45 mm/s
0.1 μm	N: 720 mm/s	●P: 360 mm/s	Q: 180 mm/s	R: 90 mm/s
—	◎Z: When [Signal output] is [A] [D], maximum response speed at Sinusoidal signal -3 dB attenuation is 1.2 m/s.			

Note: The minimum edge interval varies 0 to -10% based on the operating environmental conditions.

Special codes

Code	Details
●None	Standard selection specification
Z	Special specification

Note: If there are special details, please select Z.

Head cable length

Code	Length
●A	1 m (High flex)
B	0.5 m (High flex)
Z	Special length specification (max. 2.5 m)

Alarm output

Code	Details
●S	Alarm signal
H	High impedance
◎Z	When [Signal output] is [A] or [D]

Direction

Code	Details
●1	Normal: PA goes ahead
2	Reverse: PB goes ahead
◎Z	When [Signal output] is [A] or [D]

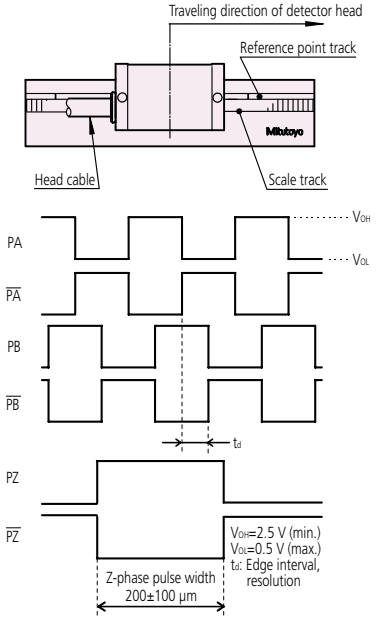

Note: This is the waveform that results when the detector head moves as shown in the figure above.

Mitutoyo

Mounting dimensions

Unit: mm

• **10 to 80 mm (Adhesive fixing type)**

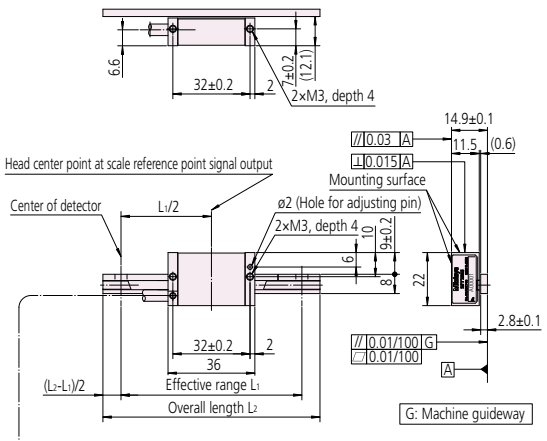

• **100 to 3000 mm**

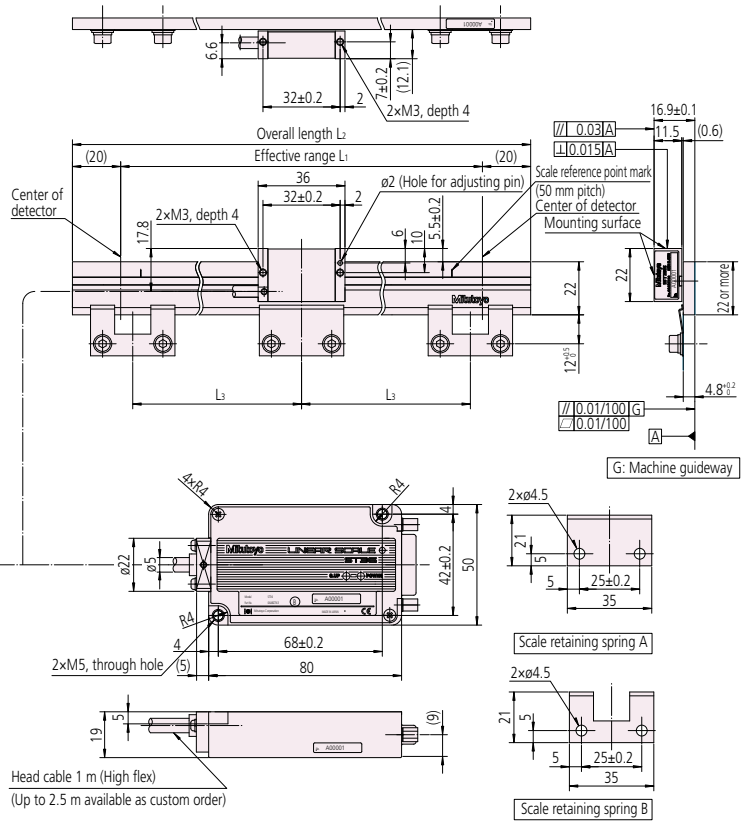

Dimensions of scale units

Order No.*	Model	Effective range L_1 (mm)	Overall length L_2 (mm)	Scale fixing pitch L_3 (mm)	Retaining spring A	Retaining spring B
579-501-0□	**ST36◇-10**	10	30	—	—	—
579-502-0□	**ST36◇-25**	25	45	—	—	—
579-503-0□	**ST36◇-50**	50	70	—	—	—
579-504-0□	**ST36◇-75**	75	90	—	—	—
579-505-0□	**ST36◇-80**	80	100	—	—	—
579-506-0□	**ST36◇-100**	100	140	50	1 pc.	2 pcs.
579-507-0□	**ST36◇-150**	150	190	75	1 pc.	2 pcs.
579-508-0□	**ST36◇-200**	200	240	100	1 pc.	2 pcs.
579-509-0□	**ST36◇-250**	250	290	60	1 pc.	4 pcs.
579-510-0□	**ST36◇-300**	300	340	75	1 pc.	4 pcs.
579-511-0□	**ST36◇-350**	350	390	85	1 pc.	4 pcs.
579-512-0□	**ST36◇-400**	400	440	100	1 pc.	4 pcs.
579-513-0□	**ST36◇-450**	450	490	75	1 pc.	6 pcs.
579-514-0□	**ST36◇-500**	500	540	80	1 pc.	6 pcs.
579-515-0□	**ST36◇-600**	600	640	100	1 pc.	6 pcs.
579-516-0□	**ST36◇-700**	700	740	85	1 pc.	8 pcs.
579-517-0□	**ST36◇-800**	800	840	100	1 pc.	8 pcs.

Order No.*	Model	Effective range L_1 (mm)	Overall length L_2 (mm)	Scale fixing pitch L_3 (mm)	Retaining spring A	Retaining spring B
579-518-0□	**ST36◇-900**	900	940	90	1 pc.	10 pcs.
579-519-0□	**ST36◇-1000**	1000	1040	100	1 pc.	10 pcs.
579-520-0□	**ST36◇-1100**	1100	1140	90	1 pc.	12 pcs.
579-521-0□	**ST36◇-1200**	1200	1240	100	1 pc.	12 pcs.
579-522-0□	**ST36◇-1300**	1300	1340	130	1 pc.	10 pcs.
579-523-0□	**ST36◇-1400**	1400	1440	100	1 pc.	14 pcs.
579-524-0□	**ST36◇-1500**	1500	1540	125	1 pc.	12 pcs.
579-525-0□	**ST36◇-1600**	1600	1640	100	1 pc.	16 pcs.
579-526-0□	**ST36◇-1700**	1700	1740	120	1 pc.	14 pcs.
579-527-0□	**ST36◇-1800**	1800	1840	100	1 pc.	18 pcs.
579-528-0□	**ST36◇-2000**	2000	2040	100	1 pc.	20 pcs.
579-529-0□	**ST36◇-2200**	2200	2240	100	1 pc.	22 pcs.
579-530-0□	**ST36◇-2400**	2400	2440	100	1 pc.	24 pcs.
579-531-0□	**ST36◇-2500**	2500	2540	95	1 pc.	26 pcs.
579-532-0□	**ST36◇-2600**	2600	2640	100	1 pc.	26 pcs.
579-533-0□	**ST36◇-2800**	2800	2840	100	1 pc.	28 pcs.
579-534-0□	**ST36◇-3000**	3000	3040	100	1 pc.	30 pcs.

* The above Order No. are for recommended items marked with ● / ◎ symbols.
If recommended specifications meet your requirements, use these Order No. to order.
The □ and ◇ symbols in the tables above have the following meanings:
◇→**A** (2-phase sinusoidal signals) : □→**1**
◇→**B** (2-phase square wave signals + reset input) : □→**2**
◇→**C** (2-phase sinusoidal signals + 2-phase square wave signals) : □→**3**
◇→**D** (1 Vpp differential) : □→**4**

Separate Type ST Series

Sinusoidal siqnal & Square-Wave Signal Output Scale Unit (Compact Type)

ST46-EZA

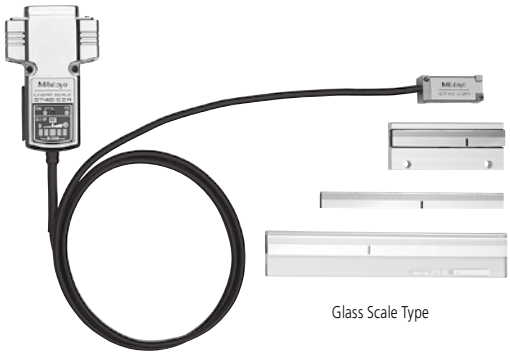

Glass Scale Type

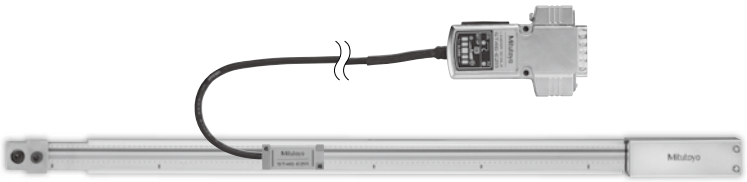

Metal Tape Scale Type
Double-ended mounting type

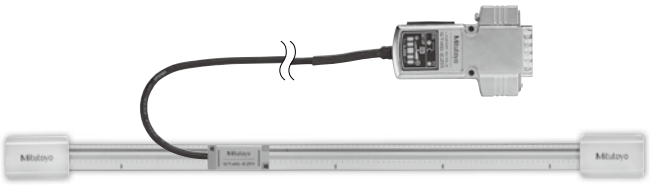

Metal Tape Scale Type
Double-sided tape mounting type

Features

- Includes an automatic adjusting function for the signal (EZA function) at the push of a button.
- Connector incorporates a "Setup indicator" for checking the signal strength without using an oscilloscope or PC.
- When connected with a PC it is possible to check signal strength and set parameter, (Optional application program required).
- I/F circuit integrated in connector shell reduces volume to compared to conventional interface.
- The metal tape scale type has a mounting surface area of 12.5 by 9.325 mm, allowing use in applications where a space-saving design is important.
- Glass Scale Type or Metal Tape Scale Type is available.

Specifications

Item / Model	ST46-EZA	
Detection method	Reflective optical linear encoder	
Scale specifications	Glass	Metal tape
Main scale grating pitch	20 µm	
Output signal	Type B: 2-phase square wave signals, reference point pulse, external reset input Type C: 2-phase square wave signals, reference point pulse, 2-phase sinusoidal signals	
Effective range	10 to 3000 mm	
Accuracy (20 °C)	Effective range 10 to 300 mm: ±1 µm Effective range 350 to 500 mm: ±2 µm Effective range 600 to 1000 mm: ±3 µm Effective range 1100 to 3000 mm: ±3 µm/m	Effective range 10 to 1000 mm: ±5 µm Effective range 1100 to 3000 mm: ±5 µm/m (The above accuracy applies to individual scales. For double-end mounting designs, perform point-to-point correction after ensuring the metal tape is tensioned correctly.)
Thermal expansion coefficient	≈ 8×10^{-6}/K	≈11×10^{-6}/K Note: When mounted on iron or material with equivalent CLTE value.
Scale reference point	With scale reference point (50 mm pitch, 10 to 80 mm: Center point)	
Maximum response speed	2600 mm/s (at sine wave amplitude -3 dB)	
Power supply voltage	5 VDC ±5%	
Maximum current consumption	250 mA	
Operating temperature/humidity	0 to 40 °C, 20 to 80%RH (no condensation)	
Storage temperature/humidity	-20 to 60 °C, 20 to 80%RH (no condensation)	

System Configuration

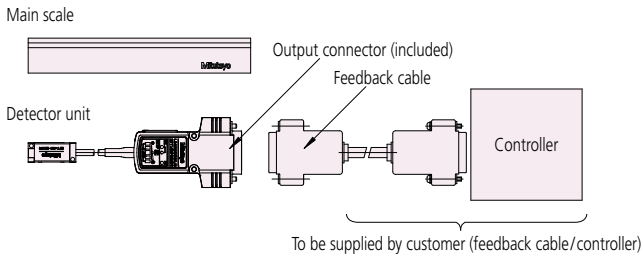

Mitutoyo

Output specification

- **Connector pin assignment (Type B)**

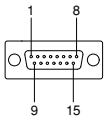

Applicable connector (included) HDAB-15S

Pin No.	Signal	Pin No.	Signal
1, 2	0 V (GND)	10	PA (main signal pulse_Normal phase)
3, 4	+5 V (Vcc)	11	$\overline{PA}$ (main signal pulse_Reverse phase)
5	Reset input AL (anode)	12	PB (main signal pulse_Normal phase)
6	Reset input AL (cathode)	13	$\overline{PB}$ (main signal pulse_Reverse phase)
7	NC	14	$\overline{PZ}$ (reference point pulse_Reverse phase)
8	PZ (reference point pulse_Normal phase)	15	F. G
9	$\overline{ALM}$ (alarm)		

- **Connector pin assignment (Type C)**

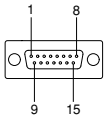

Applicable connector (included) HDAB-15S

Pin No.	Signal	Pin No.	Signal
1, 2	0 V (GND)	10	PA (main signal pulse_Normal phase)
3, 4	+5 V (Vcc)	11	$\overline{PA}$ (main signal pulse_Reverse phase)
5	Phase A (sinusoidal signal)	12	PB (main signal pulse_Normal phase)
6	Phase B (sinusoidal signal)	13	$\overline{PB}$ (main signal pulse_Reverse phase)
7	Vref (≒Vcc/2)	14	$\overline{PZ}$ (reference point pulse_Reverse phase)
8	PZ (reference point pulse_Normal phase)	15	F. G
9	$\overline{ALM}$ (alarm)		

- **Application program (Optional: 06AEF800)**

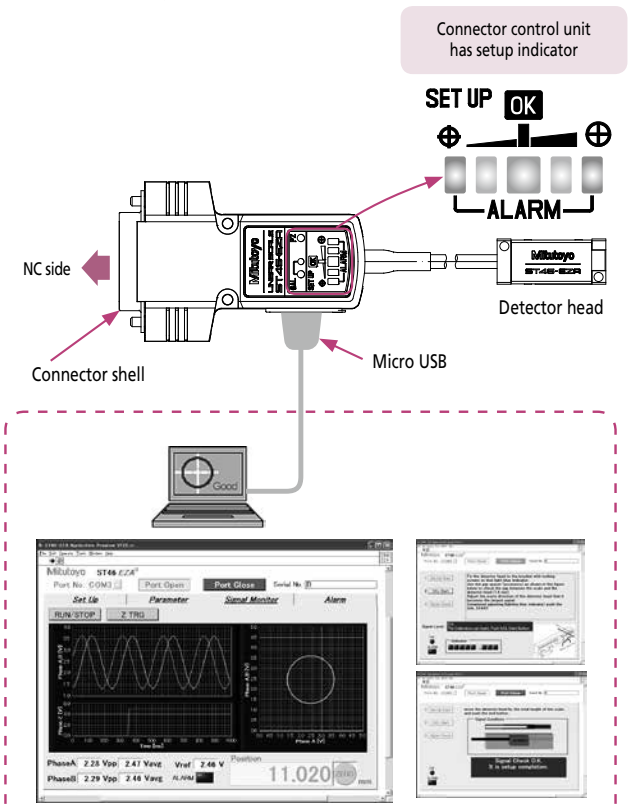

Signal strength checking and parameter setup can be performed on a PC
(PC to be prepared by customer)

Output signal waveform and specification

- **2-phase square wave signals (Type B)**

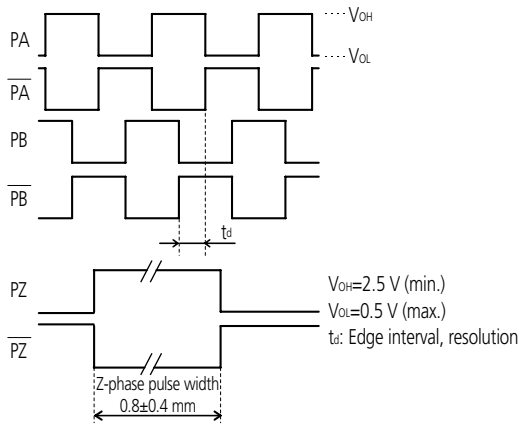

- **2-phase sinusoidal signals, 2-phase square wave signals (Type C)**

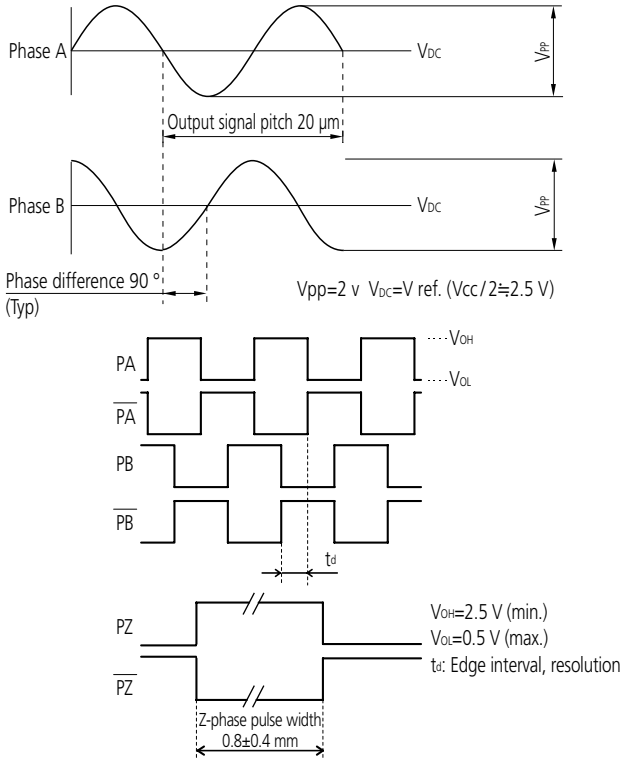

Specification Selection Method

- There is an extensive selection of specifications for the **ST46-EZA**.
- Choose the appropriate numbers and letters below according to specification required.
  If standard specifications (recommended items marked with ● symbol below) meet your requirements, please order using the Order No. shown on pages 15 - 19.

Meaning of Model No.

ST46-EZA □ - □□□□□ - □□□□□

Signal output

Code	Details
B	Square wave signal + External reset input
C	Sinusoidal signal + Square wave signal

Effective range

Code	Effective range (mm)	Code	Effective range (mm)	Code	Effective range (mm)
0010	10	0450	450	1600	1600
0025	25	0500	500	1700	1700
0050	50	0600	600	1800	1800
0075	75	0700	700	2000	2000
0080	80	0800	800	2200	2200
0100	100	0900	900	2400	2400
0150	150	1000	1000	2500	2500
0200	200	1100	1100	2600	2600
0250	250	1200	1200	2800	2800
0300	300	1300	1300	3000	3000
0350	350	1400	1400		
0400	400	1500	1500		

Note: For the standard specification, the indicated effective range depends on the product code.
Example of standard specification
Effective range 10 mm: **ST46EZA□-0010**
Effective range 250 mm: **ST46EZA□-0250**

Reference point / Scale shape

Code	Details (Effective range)	Details - Cross-section (Effective range)
●A	Glass, separate: t4.8×w22 (100 - 3000 mm)	50 mm pitch
●B	Glass, separate: t2.8×w8 (10 - 80 mm)	Center point
●C	With aluminum base: t5.1×w23 (10 - 80 mm)	Center point
D	Metal Tape Scale double-end mounting: t0.2×w13 (500 - 3000 mm)	50 mm pitch
E	Metal Tape Scale Double-sided tape mounting: t0.2×w13 (10 - 3000 mm)	Center point (10 - 80 mm)
		50 mm pitch (100 - 3000 mm)
Z	Special shape	Special position specification

Resolution / Minimum edge interval

Code	Resolution (μm)	Minimum edge interval (ns)	Maximum response speed (mm/s)
A	0.05	100	450
B		200	225
C		400	112
D		800	56
E	0.1	100	900
●F		200	450
G		400	225
H		800	112
J	0.5	100	2600
K		200	2250
L		400	1125
M		800	562
N	1	100	2600
P		200	2600
Q		400	2250
R		800	1125
S	5	100	2600
T		200	2600
U		400	2600
V		800	2600

Special codes

Code	Details
●None	Standard selection specification
Z	Special specification

Head cable length

Code	Length
●A	1 m (standard)
B	0.5 m
C	2 m
Z	Special length specification (max. 2.5 m)

Alarm output

Code	Details
●S	Alarm signal
H	High impedance

Direction

Code	Details
●1	Normal
2	Reverse

When the direction is normal, the sinusoidal signal, the 2-phase square wave output signal (Phase A, Phase B) and the reference point signal waveform are as shown below.

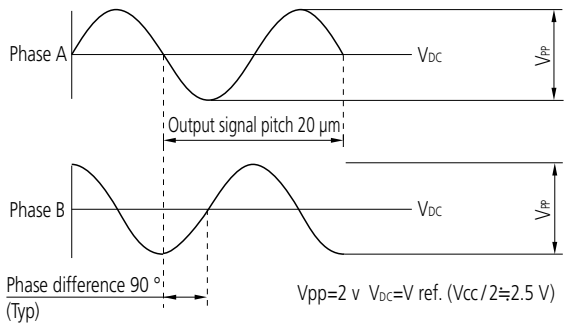

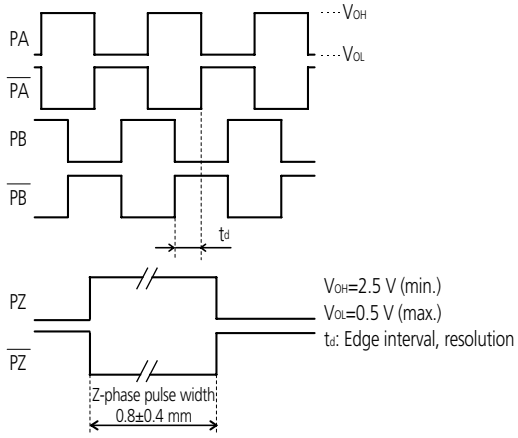

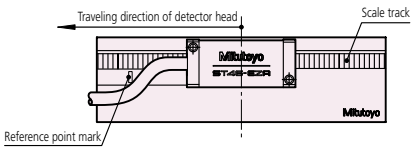

Mitutoyo

ST46-EZA Scale unit mounting dimensions

• **Effective range 10 to 80 mm (No aluminum base)**

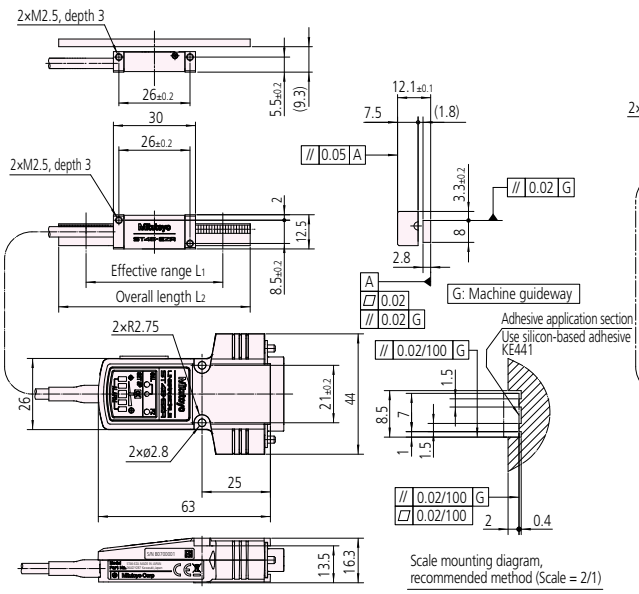

• **Effective range 10 to 80 mm (With aluminum base)**

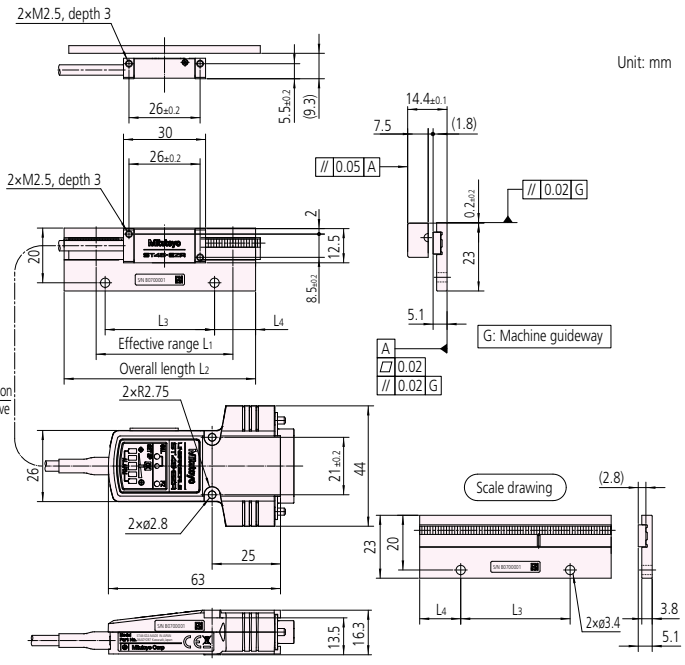

Dimensions of scale units

• **10 to 80 mm** (No aluminum base)

Order No.	Model	Effective range L_1 (mm)	Overall length L_2 (mm)
579-665-12	**ST46EZAB-10B**	10	30
579-666-12	**ST46EZAB-25B**	25	45
579-667-12	**ST46EZAB-50B**	50	70
579-668-12	**ST46EZAB-75B**	75	90
579-669-12	**ST46EZAB-80B**	80	100
579-665-22	**ST46EZAC-10B**	10	30
579-666-22	**ST46EZAC-25B**	25	45
579-667-22	**ST46EZAC-50B**	50	70
579-668-22	**ST46EZAC-75B**	75	90
579-669-22	**ST46EZAC-80B**	80	100

• **10 to 80 mm** (With aluminum base)

Order No.	Model	Effective range L_1 (mm)	Overall length L_2 (mm)	L_3 (mm)	L_4 (mm)
579-665-13	**ST46EZAB-10C**	10	30	15	7.5
579-666-13	**ST46EZAB-25C**	25	45	25	10
579-667-13	**ST46EZAB-50C**	50	70	40	15
579-668-13	**ST46EZAB-75C**	75	90	60	15
579-669-13	**ST46EZAB-80C**	80	100	70	15
579-665-23	**ST46EZAC-10C**	10	30	15	7.5
579-666-23	**ST46EZAC-25C**	25	45	25	10
579-667-23	**ST46EZAC-50C**	50	70	40	15
579-668-23	**ST46EZAC-75C**	75	90	60	15
579-669-23	**ST46EZAC-80C**	80	100	70	15

• **Effective range 100 to 3000 mm**

Unit: mm

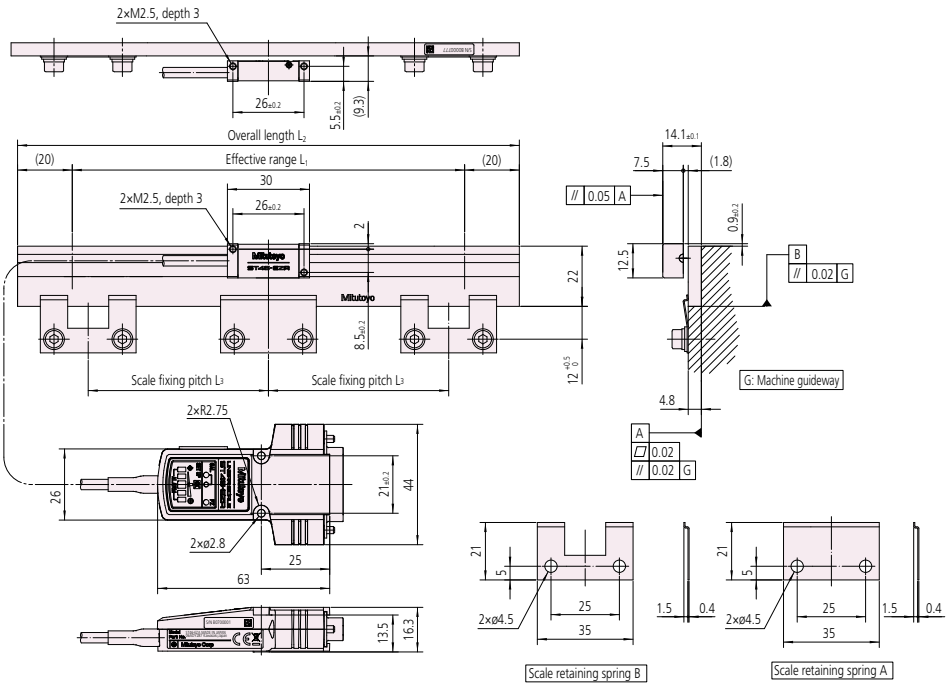

Dimensions of scale units

• **Effective range 100 to 3000 mm**

Order No.*	Model*	Effective range L1 (mm)	Overall length L2 (mm)	Scale fixing pitch L3 (mm)	Scale retaining spring A (pc.)	Scale retaining spring B (pcs.)
579-670-□1	**ST46EZA◇-100A**	100	140	50		2
579-671-□1	**ST46EZA◇-150A**	150	190	75		2
579-672-□1	**ST46EZA◇-200A**	200	240	100		2
579-673-□1	**ST46EZA◇-250A**	250	290	60		4
579-674-□1	**ST46EZA◇-300A**	300	340	75		4
579-675-□1	**ST46EZA◇-350A**	350	390	85		4
579-676-□1	**ST46EZA◇-400A**	400	440	100		4
579-677-□1	**ST46EZA◇-450A**	450	490	75		6
579-678-□1	**ST46EZA◇-500A**	500	540	80		6
579-679-□1	**ST46EZA◇-600A**	600	640	100		6
579-680-□1	**ST46EZA◇-700A**	700	740	85		8
579-681-□1	**ST46EZA◇-800A**	800	840	100		8
579-682-□1	**ST46EZA◇-900A**	900	940	90		10
579-683-□1	**ST46EZA◇-1000A**	1000	1040	100		10
579-684-□1	**ST46EZA◇-1100A**	1100	1140	90	1	12
579-685-□1	**ST46EZA◇-1200A**	1200	1240	100		12
579-686-□1	**ST46EZA◇-1300A**	1300	1340	130		10
579-687-□1	**ST46EZA◇-1400A**	1400	1440	100		14
579-688-□1	**ST46EZA◇-1500A**	1500	1540	125		12
579-689-□1	**ST46EZA◇-1600A**	1600	1640	100		16
579-690-□1	**ST46EZA◇-1700A**	1700	1740	120		14
579-691-□1	**ST46EZA◇-1800A**	1800	1840	100		18
579-692-□1	**ST46EZA◇-2000A**	2000	2040	100		20
579-693-□1	**ST46EZA◇-2200A**	2200	2240	100		22
579-694-□1	**ST46EZA◇-2400A**	2400	2440	100		24
579-695-□1	**ST46EZA◇-2500A**	2500	2540	95		26
579-696-□1	**ST46EZA◇-2600A**	2600	2640	100		26
579-697-□1	**ST46EZA◇-2800A**	2800	2840	100		28
579-698-□1	**ST46EZA◇-3000A**	3000	3040	100		30

* The above Order No. are for recommended items marked with ● symbol. If recommended specifications meet your requirements, please use these Order No. to order.
◇ → B (2-phase square wave signals + external reset input): □→1
◇ → C (2-phase square wave signals + 2-phase sinusoidal signals): □→2

• **Double-ended mounting type (effective range 500 to 1000 mm)**

Unit: mm

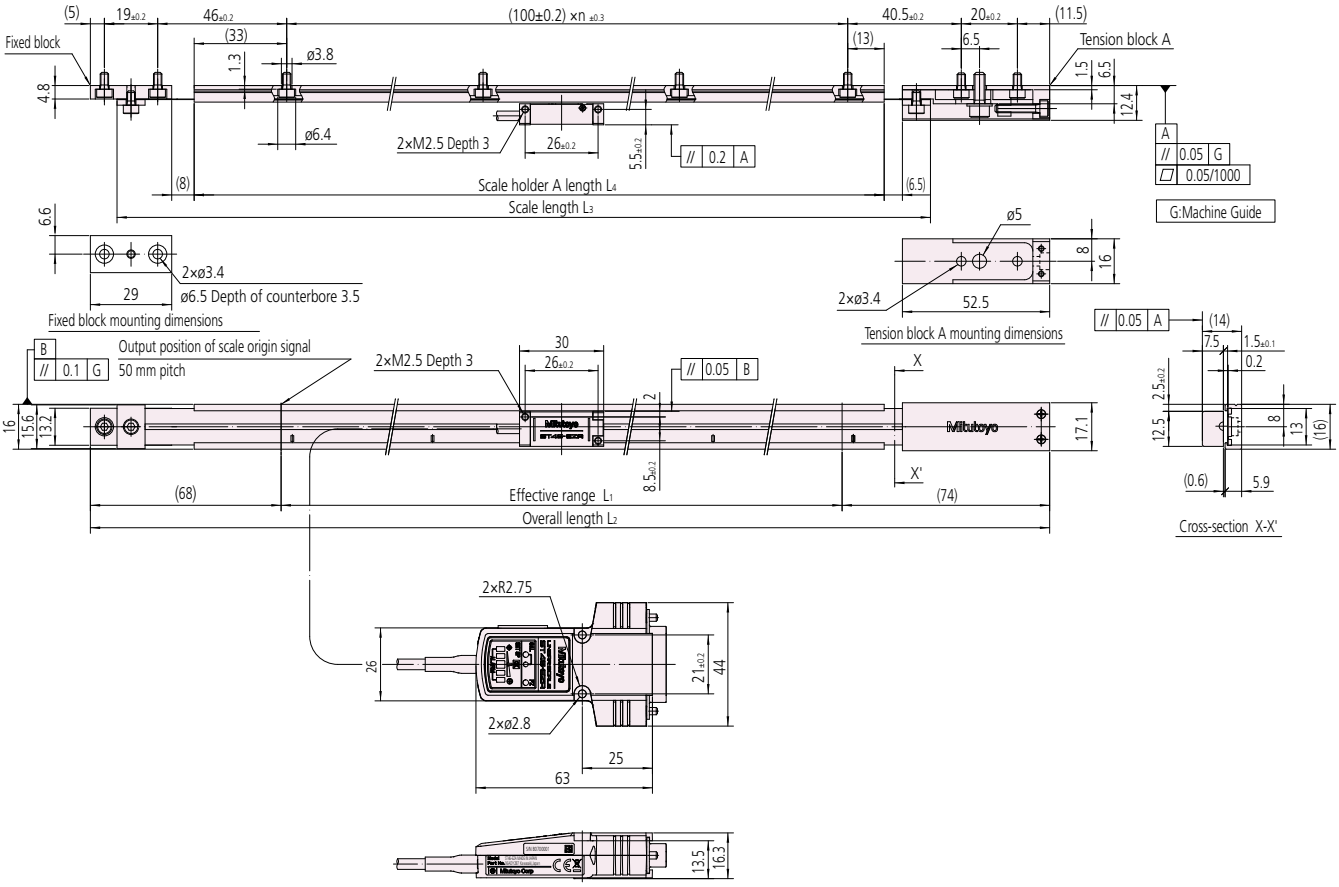

Dimensions of scale units

Order No.	Model	Effective range L_1 (mm)	Overall length L_2 (mm)	Scale length L_3 (mm)	Scale holder A length L_4 (mm)	n
579-678-□4	**ST46EZA◇- 500D**	500	642	590	546	5
579-679-□4	**ST46EZA◇- 600D**	600	742	690	646	6
579-680-□4	**ST46EZA◇- 700D**	700	842	790	746	7
579-681-□4	**ST46EZA◇- 800D**	800	942	890	846	8
579-682-□4	**ST46EZA◇- 900D**	900	1042	990	946	9
579-683-□4	**ST46EZA◇-1000D**	1000	1142	1090	1046	10

Note: The above Order No. are for recommended items marked with ● symbol. If recommended specifications meet your requirements, please use these Order No. to order.

◇ → B (2-phase square wave signals+external reset input): □ →1

◇ → C (2-phase square wave signals+2-phase sinusoidal signals): □ →2

• **Double-ended mounting type (effective range 1100 to 3000 mm)**

Unit: mm

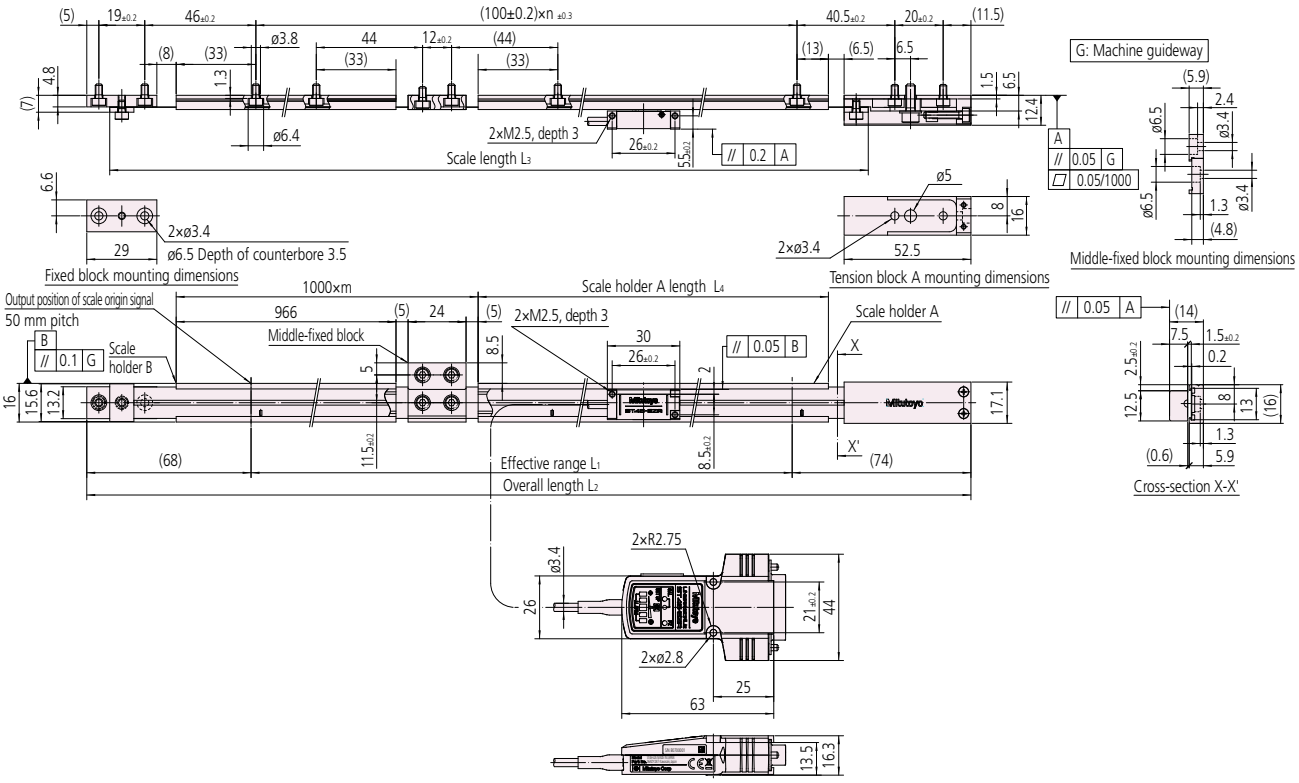

Dimensions of scale units

Order No.	Model	Effective range L_1 (mm)	Overall length L_2 (mm)	Scale length L_3 (mm)	Scale holder A length L_4 (mm)	m	n
579-684-□4	**ST46EZA◇-1100D**	1100	1242	1190	146	1	11
579-685-□4	**ST46EZA◇-1200D**	1200	1342	1290	246	1	12
579-686-□4	**ST46EZA◇-1300D**	1300	1442	1390	346	1	13
579-687-□4	**ST46EZA◇-1400D**	1400	1542	1490	446	1	14
579-688-□4	**ST46EZA◇-1500D**	1500	1642	1590	546	1	15
579-689-□4	**ST46EZA◇-1600D**	1600	1742	1690	646	1	16
579-690-□4	**ST46EZA◇-1700D**	1700	1842	1790	746	1	17
579-691-□4	**ST46EZA◇-1800D**	1800	1942	1890	846	1	18
579-692-□4	**ST46EZA◇-2000D**	2000	2142	2090	1046	1	20
579-693-□4	**ST46EZA◇-2200D**	2200	2342	2290	246	2	22
579-694-□4	**ST46EZA◇-2400D**	2400	2542	2490	446	2	24
579-695-□4	**ST46EZA◇-2500D**	2500	2642	2590	546	2	25
579-696-□4	**ST46EZA◇-2600D**	2600	2742	2690	646	2	26
579-697-□4	**ST46EZA◇-2800D**	2800	2942	2890	846	2	28
579-698-□4	**ST46EZA◇-3000D**	3000	3142	3090	1046	2	30

Note: The above Order No. are for recommended items marked with ● symbol. If recommended specifications meet your requirements, please use these Order No. to order.

◇ → B (2-phase square wave signals+external reset input): □→1

◇ → C (2-phase square wave signals+2-phase sinusoidal signals): □→2

• **Double-sided tape mounting type**

Unit: mm

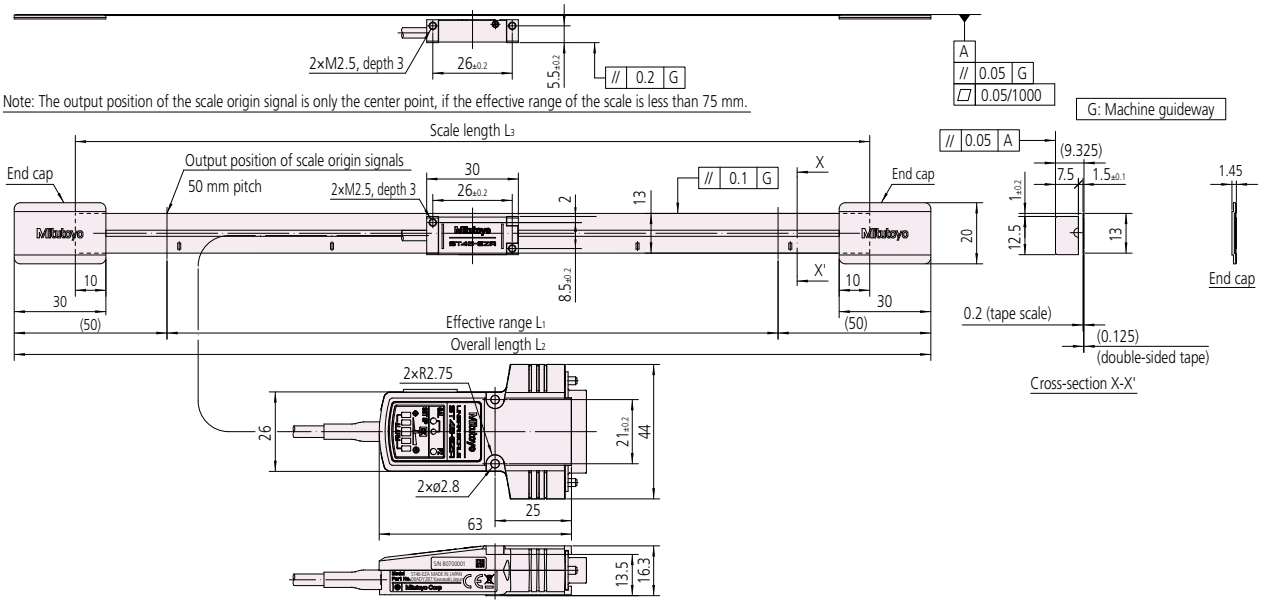

Dimensions of scale units

Order No.	Model	Effective range L_1 (mm)	Overall length L_2 (mm)	Scale length L_3 (mm)
579-665-□5	**ST46EZA◇- 10E**	10	110	70
579-666-□5	**ST46EZA◇- 25E**	25	125	85
579-667-□5	**ST46EZA◇- 50E**	50	150	110
579-668-□5	**ST46EZA◇- 75E**	75	175	135
579-670-□5	**ST46EZA◇- 100E**	100	200	160
579-671-□5	**ST46EZA◇- 150E**	150	250	210
579-672-□5	**ST46EZA◇- 200E**	200	300	260
579-673-□5	**ST46EZA◇- 250E**	250	350	310
579-674-□5	**ST46EZA◇- 300E**	300	400	360
579-675-□5	**ST46EZA◇- 350E**	350	450	410
579-676-□5	**ST46EZA◇- 400E**	400	500	460
579-677-□5	**ST46EZA◇- 450E**	450	550	510
579-678-□5	**ST46EZA◇- 500E**	500	600	560
579-679-□5	**ST46EZA◇- 600E**	600	700	660
579-680-□5	**ST46EZA◇- 700E**	700	800	760
579-681-□5	**ST46EZA◇- 800E**	800	900	860
579-682-□5	**ST46EZA◇- 900E**	900	1000	960
579-683-□5	**ST46EZA◇-1000E**	1000	1100	1060
579-684-□5	**ST46EZA◇-1100E**	1100	1200	1160
579-685-□5	**ST46EZA◇-1200E**	1200	1300	1260
579-686-□5	**ST46EZA◇-1300E**	1300	1400	1360
579-687-□5	**ST46EZA◇-1400E**	1400	1500	1460
579-688-□5	**ST46EZA◇-1500E**	1500	1600	1560
579-689-□5	**ST46EZA◇-1600E**	1600	1700	1660
579-690-□5	**ST46EZA◇-1700E**	1700	1800	1760
579-691-□5	**ST46EZA◇-1800E**	1800	1900	1860
579-692-□5	**ST46EZA◇-2000E**	2000	2100	2060
579-693-□5	**ST46EZA◇-2200E**	2200	2300	2260
579-694-□5	**ST46EZA◇-2400E**	2400	2500	2460
579-695-□5	**ST46EZA◇-2500E**	2500	2600	2560
579-696-□5	**ST46EZA◇-2600E**	2600	2700	2660
579-697-□5	**ST46EZA◇-2800E**	2800	2900	2860
579-698-□5	**ST46EZA◇-3000E**	3000	3100	3060

Note: The above Order No. are for recommended items marked with ● symbol. If recommended specifications meet your requirements, please use these Order No. to order.

◇ → B (2-phase square wave signals+external reset input): □ →1

◇ → C (2-phase square wave signals+2-phase sinusoidal signals): □ →2

Assembly Type AT Series

Sinusoidal Siqnal Output Scale Unit

AT113

AT113

Specifications

Item / Model	AT113
Detection method	Transmission optical linear encoder Light source: LED Light-receiving device: phototransistor
Output	Two 90° phase-shifted square wave signals
Main scale grating pitch	20 µm
Signal output pitch	20 µm
Maximum effective range	1500 mm
Accuracy (20 °C)*1	(5 + 5L0/1000) µm, L0: Effective range (mm)
Maximum response speed*2	2,000 mm/s
Scale reference point	With scale reference point (50 mm pitch)
Thermal expansion coefficient	≈8×10^{-6}/K
Power supply voltage	5 VDC ±5%
Maximum current consumption	60 mA
Operating/storage temperature	0 to 45 °C -20 to 70 °C
Operating/storage humidity (relative humidity)	20 - 80% RH (no condensation)
Head cable length	0.3 m
Sliding force	5 N max.
Signal cable*3	Standard accessory (For the length, see the Dimensions table of each scale units)

	Length	Order No.	Notes
Extension cable (optional)*3	2 m	**09AAA033A**	With conduit
	5 m	**09AAA033B**	
	7 m	**09AAA033C**	

*1 A high-accuracy type is available separately depending on the model. (See the Note in the Dimensions Table of the scale unit.)
*2 Depends on the control unit to be connected.
*3 Vinyl-coated signal cables and extension cables are custom-made.

Output signal

Signal output circuit

Main signal (Phase A, Phase B) Output circuit

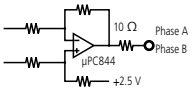

Reference voltage signal (REF) Output circuit

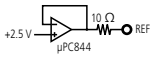

Reference point signal (øZ) Output circuit

Alarm signal output circuit

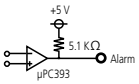

Output specification

Output connector (pin type)
DA-15P-NR (JAE)
Applicable socket connector
DA-15S-NR (JAE) or equivalent

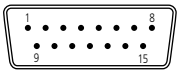

Pin No.	Signal
1	0 V
2	0 V
3	+5 V
4	+5 V
5	Phase A
6	Phase B
7	Reference voltage
8	Scale reference point
9	$\overline{\text{ALM}}$ (alarm)
10 - 14	Not used
15	F.G

Output signal waveform

Signal	Output signal waveform
Phase A Phase B Scale reference point	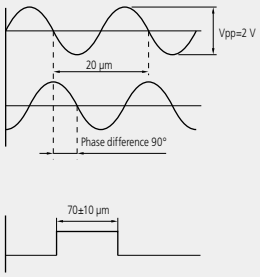

AT113 (Slim Type)

Unit: mm

The scale origin data is outputted at every 50 mm pitch from the end (▽ mark) of effective measuring range (L_0).

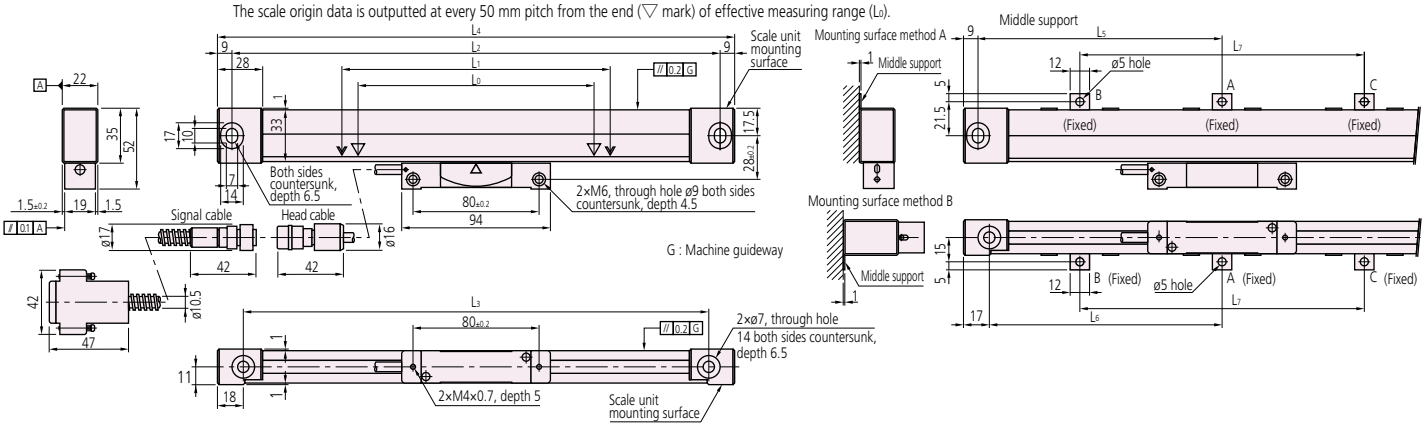

- Dimensions L_5, L_6, and L_7 indicate the recommended mounting positions for the middle supports included with scale units with an effective range of 500 mm and more. (The position of the middle support is adjustable in the measuring direction.)

Effective range (mm)	Middle support
500 - 1000	A (1 place)
1100 - 1500	BC (2 places)

Dimensions of scale units

AT113		Effective range	Maximum travel length	Mounting hole pitch	Mounting hole pitch	Overall length	Middle support	Middle support	Middle support	Signal cable length (m)
Order No	Model	L_0 (mm)	L_1 (mm)	L_2 (mm)	L_3 (mm)	L_4 (mm)	L_5 (mm)	L_6 (mm)	L_7 (mm)	
539-201-30	**AT113- 100**	100	120	258	242	276	—	—	—	3
539-202-30	**AT113- 150**	150	170	308	292	326				
539-203-30	**AT113- 200**	200	220	358	342	376				
539-204-30	**AT113- 250**	250	270	408	392	426				
539-205-30	**AT113- 300**	300	330	468	452	486				
539-206-30	**AT113- 350**	350	380	518	502	536				
539-207-30	**AT113- 400**	400	430	568	552	586				
539-208-30	**AT113- 450**	450	480	618	602	636				
539-209-30	**AT113- 500**	500	540	678	662	696	339	331	—	
539-211-30	**AT113- 600**	600	640	778	762	796	389	381		
539-213-30	**AT113- 700**	700	740	878	862	896	439	431		
539-214-30	**AT113- 750**	750	780	918	902	936	459	451		
539-215-30	**AT113- 800**	800	840	978	962	996	489	481		
539-216-30	**AT113- 900**	900	940	1078	1062	1096	539	531		
539-217-30	**AT113-1000**	1000	1040	1178	1162	1196	589	581		5
539-218-30	**AT113-1100**	1100	1140	1278	1262	1296	—	—	430	
539-219-30	**AT113-1200**	1200	1240	1378	1362	1396			460	
539-220-30	**AT113-1300**	1300	1340	1478	1462	1496			490	
539-221-30	**AT113-1400**	1400	1440	1578	1562	1596			530	
539-222-30	**AT113-1500**	1500	1540	1678	1662	1696			560	

Note 1: High-accuracy type **AT113F** in JIS 0 class (accuracy: 3 + 3L_0/1000 μm) is also available.
Note 2: Ultra high-accuracy type **AT113S** with an accuracy of (2 + 2L_0/1000) μm is custom-made for each model with an effective measuring length of 100 to 500 mm.
Note 3: Accuracy depends on the effective measuring length Lo (mm) without including a quantizing error.

AT211

Mounting method: Multi-point fixing (excellent vibration and shock resistance)

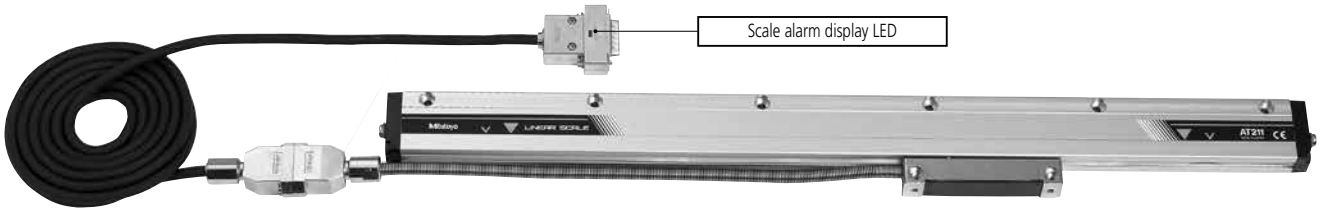

Mounting method: Double-end fixing (space-saving type)

Features

- This is a slim, sealed scale that can be directly connected to the control unit.
- High speed response up to 2000 mm/s, making it compatible with a wide range of resolutions from 0.1 to 5 µm.
- The multi-point fixing type has excellent vibration resistance.
- Scale alarm display makes for easy maintenance.
- Wide range of specifications enables easy choice to best suit your application.

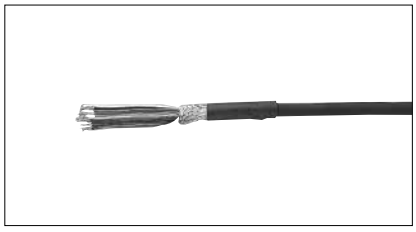

Single head cable type (no connector)

Specifications

Item / Model		AT211
Effective range (L_0)		100, 150, 200, 250, 300, 350, 400, 450, 500, 600, 700, 750, 800, 900 1000, 1100, 1200, 1300, 1400, 1500 mm
Scale reference point		50 mm pitch, center point, left end, right end (fixed when shipped)
Accuracy (20 °C)		(3 + 3L_0/1000) µm (For L_0≤500 mm, we can also fabricate a high-accuracy type: (2 + 2L_0/1000) µm) L_0: Effective range (mm)
Thermal expansion coefficient		≈8×10^{-6}/K
Vibration resistance		200 m/s² (Conditions: 55 to 2000 Hz) (Multi-point fixing type)
Shock resistance		250 m/s² (Conditions: half-sine, 11 ms) (Multi-point fixing type)
Air supply hole		With air supply hole (Multi-point fixing type)
Output signal	Type	PA / $\overline{PA}$, PB / $\overline{PB}$, PZ / $\overline{PZ}$
	Electrical specifications	Conforms to RS422
Main scale grating pitch		20 µm
Minimum resolution		0.1, 0.2, 0.5, 1, 2.5, 5 µm (fixed when shipped)
Minimum edge interval		125, 250, 333, 500, 1000 ns (fixed when shipped)
Maximum response speed		90 to 2000 mm/s (Determined by minimum resolution and minimum edge interval)
Power supply voltage		5 VDC ±5%
Maximum current consumption		200 mA
Sliding force		5 N max.
Operating temperature		0 to 45 °C
Storage temperature		-20 to 70 °C
Operating/storage humidity		20 to 80% RH (no condensation)
Direction switching		Standard / Reverse (set when shipped)
Alarm function	Alarm detection	Over-speed, scale signal error
	Alarm output	Output for PA / $\overline{PA}$, PB / $\overline{PB}$, and PZ / $\overline{PZ}$ are all high-impedance
	Alarm display	Red LED on NC side connector of signal cable turns on (this does not include single head cable types)

Mounting dimensions for multi-point fixing type

Unit: mm

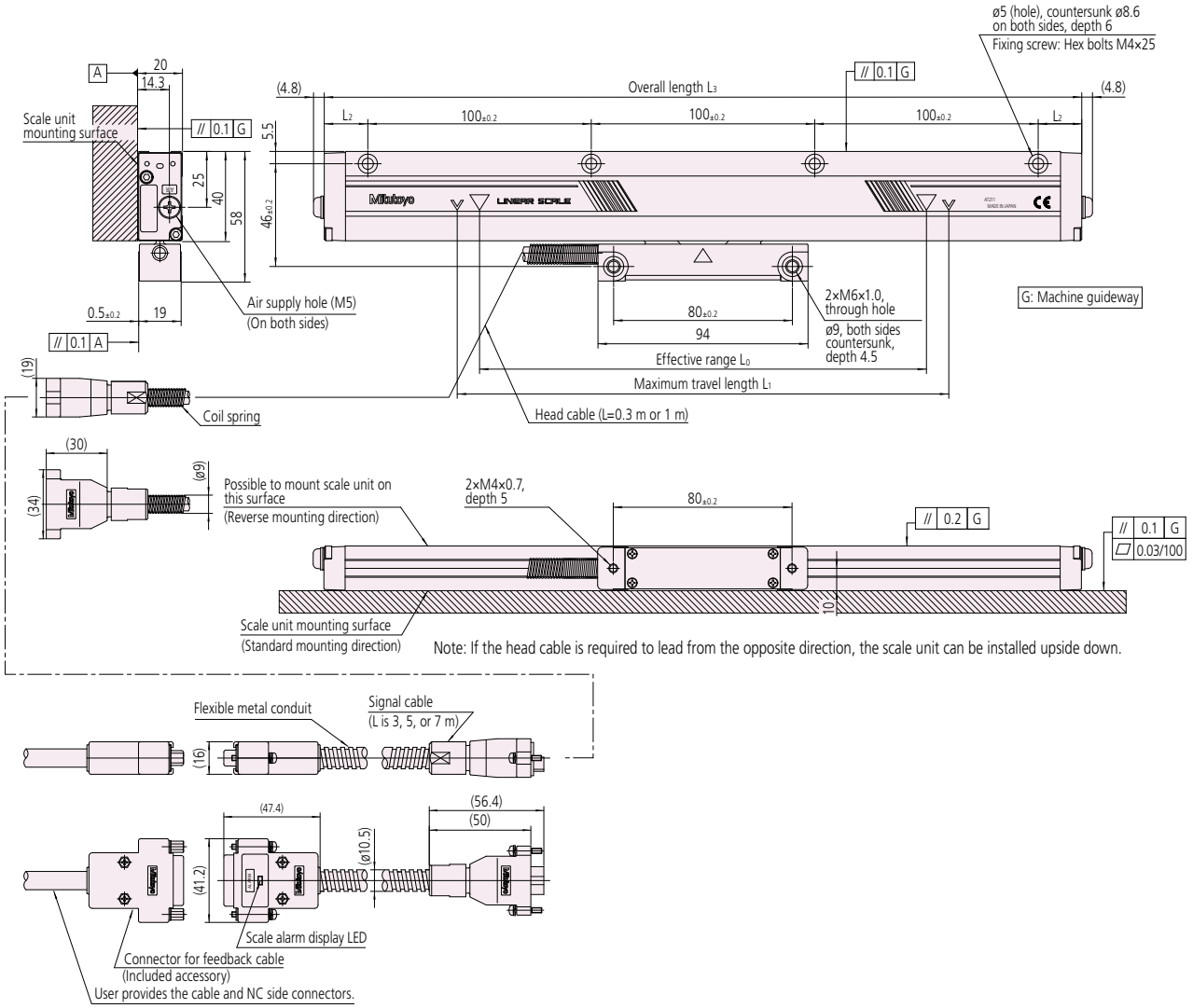

Mounting dimensions for multi-point fixing type

Scale unit	Effective range L_0 (mm)	Maximum travel length L_1 (mm)	End surface dimensions L_2 (mm)	Overall length L_3 (mm)	No. of mounting holes on scale unit (pcs.)
AT211- 100A	100	120	19.5	239	3
AT211- 150A	150	170	44.5	289	3
AT211- 200A	200	220	19.5	339	4
AT211- 250A	250	270	44.5	389	4
AT211- 300A	300	330	24.5	449	5
AT211- 350A	350	380	49.5	499	5
AT211- 400A	400	430	24.5	549	6
AT211- 450A	450	480	49.5	599	6
AT211- 500A	500	540	29.5	659	7
AT211- 600A	600	640	29.5	759	8
AT211- 700A	700	740	29.5	859	9
AT211- 750A	750	780	49.5	899	9
AT211- 800A	800	840	29.5	959	10
AT211- 900A	900	940	29.5	1059	11
AT211-1000A	1000	1040	29.5	1159	12
AT211-1100A	1100	1140	29.5	1259	13
AT211-1200A	1200	1240	29.5	1359	14
AT211-1300A	1300	1340	29.5	1459	15
AT211-1400A	1400	1440	29.5	1559	16
AT211-1500A	1500	1540	29.5	1659	17

Mounting dimensions for double-end fixing type

Unit: mm

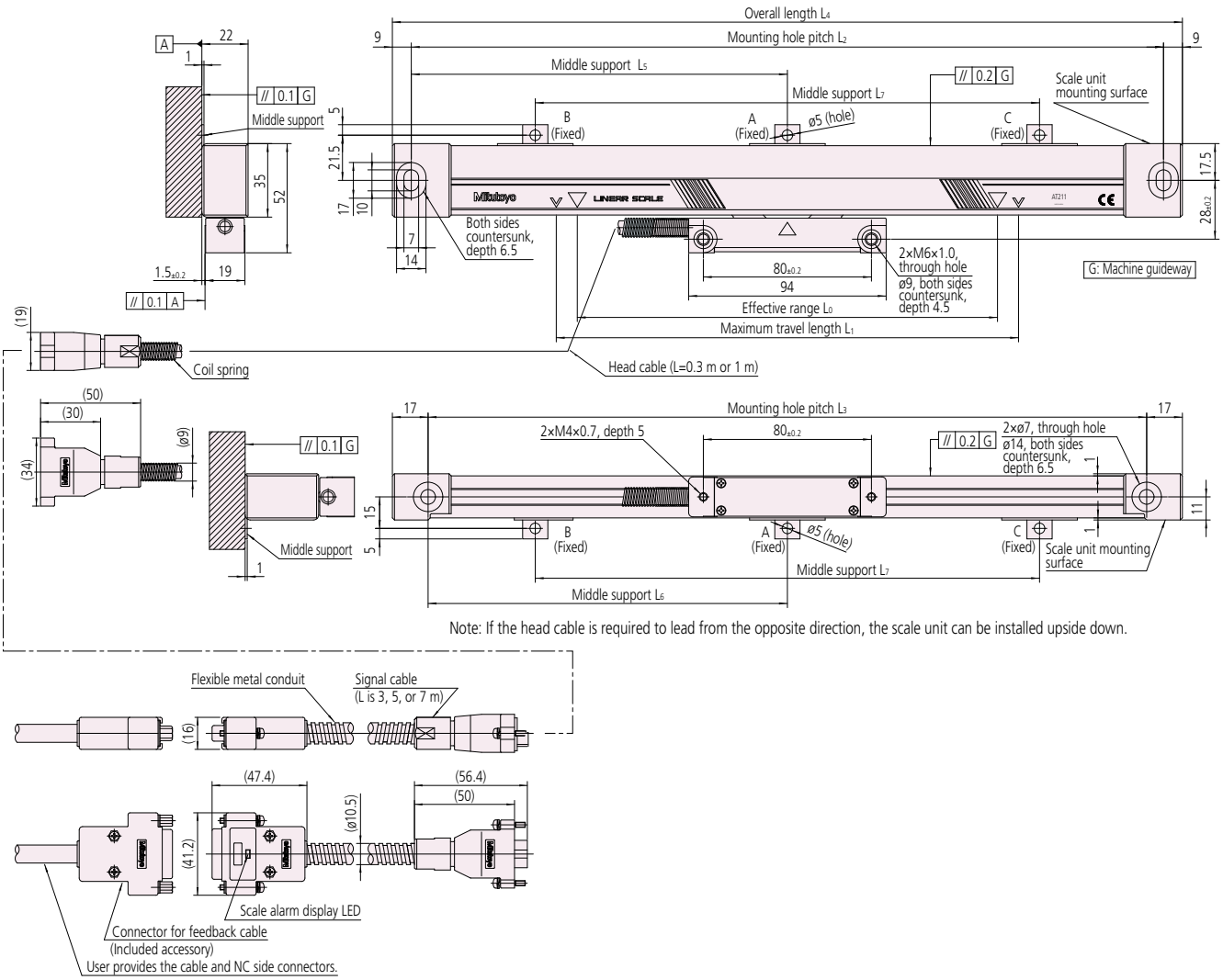

Note: If the head cable is required to lead from the opposite direction, the scale unit can be installed upside down.

Mounting dimensions for double-end fixing type

Scale unit	Effective range L_0 (mm)	Maximum travel length L_1 (mm)	Mounting hole pitch (mm)		Overall length L_4 (mm)	Middle support (mm)		
			L_2	L_3		L_5	L_6	L_7
AT211- 100B	100	120	258	242	276	—	—	—
AT211- 150B	150	170	308	292	326			
AT211- 200B	200	220	358	342	376			
AT211- 250B	250	270	408	392	426			
AT211- 300B	300	330	468	452	486			
AT211- 350B	350	380	518	502	536			
AT211- 400B	400	430	568	552	586			
AT211- 450B	450	480	618	602	636			
AT211- 500B	500	540	678	662	696	339	331	
AT211- 600B	600	640	778	762	796	389	381	
AT211- 700B	700	740	878	862	896	439	431	
AT211- 750B	750	780	918	902	936	459	451	
AT211- 800B	800	840	978	962	996	489	481	
AT211- 900B	900	940	1078	1062	1096	539	531	
AT211-1000B	1000	1040	1178	1162	1196	589	581	
AT211-1100B	1100	1140	1278	1262	1296	—		430
AT211-1200B	1200	1240	1378	1362	1396			460
AT211-1300B	1300	1340	1478	1462	1496			490
AT211-1400B	1400	1440	1578	1562	1596			530
AT211-1500B	1500	1540	1678	1662	1696			560

- The number of middle supports attached depends on the effective range.

Effective range (mm)	Middle support
500 - 1000	A (1 place)
1100 - 1500	B, C (2 places)

Cable pattern

Unit: mm

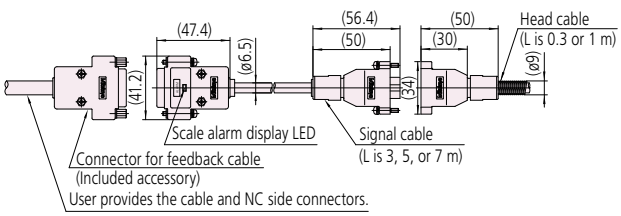

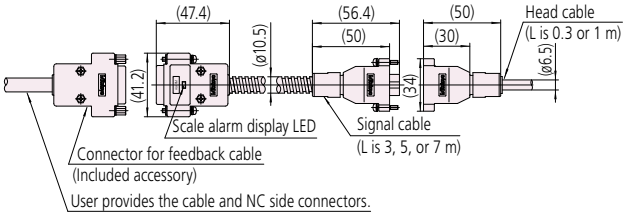

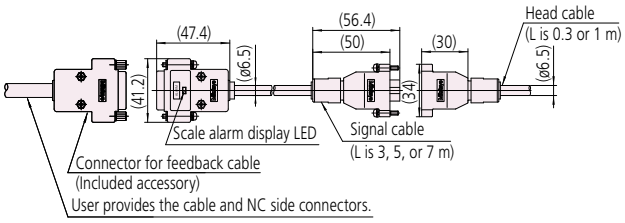

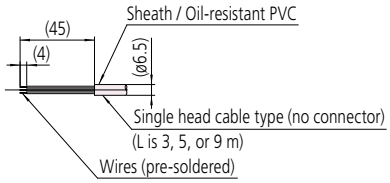

Specification Selection Method

- There is an extensive selection of specifications for the **AT211**.
- Choose the appropriate numbers and letters below according to specification required.
  If you don't have a specification in mind, choose the option with the ●.

Note: For special applications not shown in the specifications, please contact us. Additionally, we are also able to meet the 1 Vpp Sinusoidal signal output specification. Special specification code is Z. (Except effective range)

Meaning of Model No.

AT211 - □□□□□□□ - □□ - □□

Effective range list

Code	Effective range (mm)	Code	Effective range (mm)	Code	Effective range (mm)
0100	100	0450	450	1000	1000
0150	150	0500	500	1100	1100
0200	200	0600	600	1200	1200
0250	250	0700	700	1300	1300
0300	300	0750	750	1400	1400
0350	350	0800	800	1500	1500
0400	400	0900	900		

Mounting method

Code	
A	Multi-point fixing
B	Double-end fixing

Scale reference point

Code	
●1	50 mm pitch
2	Center point
3	Left end
4	Right end

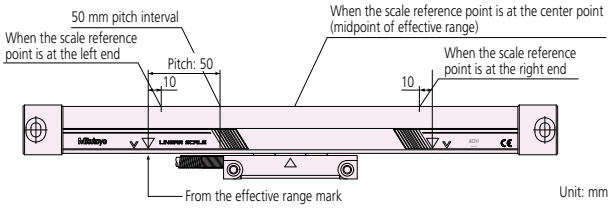

Accuracy (20 °C)

Code	
●S	(3 + 3L₀/1000) µm
H	(2 + 2L₀/1000) µm

Note 1: L_0 is the effective range (mm).
Note 2: Type H is used for effective ranges of 500 mm or less.

Specification combination table (resolution, response speed, and minimum edge interval)

Resolution (µm) \ Minimum edge interval (ns)*	125	250	333	500	1000
0.1	A: 710	B: 360	C: 260	D: 180	E: 90
0.2	F: 1400	G: 710	H: 530	J: 360	K: 180
0.5	L: 2000	M: 1800	N: 1300	P: 900	Q: 450
1.0	—	●R: 2000	S: 2000	T: 1800	U: 900
2.5	—	—	—	W: 2000	X: 2000
5.0	—	—	—	—	Y: 2000

* Codes A to Y show the maximum response speed in m/min, values in ( ) are mm/s.
Note: The minimum edge interval varies 0 to -10% based on the operating environmental conditions.

(Example) AT211 - 1500A1S - P1 - AB

- 1500: Effective range 1500 mm
- A: Mounting method — Multi-point fixing
- 1: Scale reference point — 50 mm pitch
- S: Accuracy — (3 + 3L0/1000) μm
- P: Resolution 0.5 μm; Response speed 54 m/min; Minimum edge interval: 500 ns
- 1: Direction — Standard: PA goes ahead
- A: Head cable — Length 0.3 m; With flexible metal conduit
- B: Signal cable — Length 3 m; No flexible metal conduit

Signal cable

Code	Length (L)	Flexible metal conduit*1
● A	3 m	Yes
B	3 m	No
C	5 m	Yes
D	5 m	No
E	7 m	Yes
F	7 m	No
G*2	3 m	No
H*2	5 m	No
J*2	7 m	No
X	No signal cable	

*1 The cable is enclosed in a flexible metal conduit or else is PVC sheathed.
*2 The connector (CN3) for signal cables G, H, and J are half-pitch connectors.

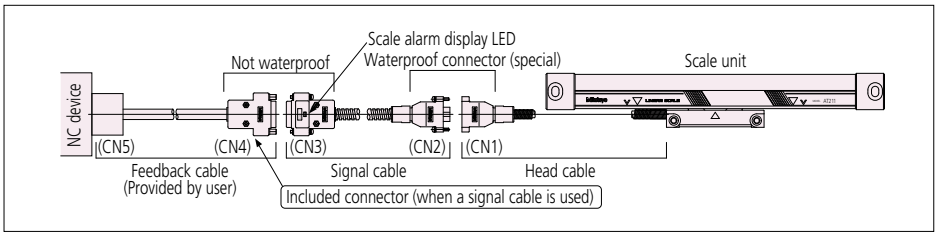

Connector for signal cable (CN3) (pin type)

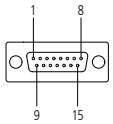

Pin No.	Signal	Pin No.	Signal
1, 2, 13	0 V	8	$\overline{PB}$
3, 4, 11	+5 V	9	PZ
5	PA	10	$\overline{PZ}$
6	$\overline{PA}$	12, 14	Not used
7	PB	15	F.G

Applicable connector (CN4):
HDAB-15S (Hirose Electric or equivalent product (D-sub series) may be used)

Output circuit specification

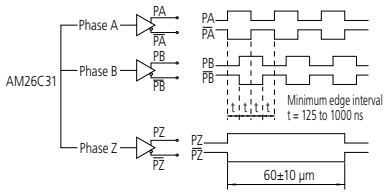

Head cable

Code	Length (L)	Flexible metal conduit	Connector (CN1)
● A	0.3 m	Yes	Special waterproof
B	0.3 m	No	Special waterproof
C	1 m	No	Special waterproof
D	3 m	No	No
E	4 m		
F	5 m		
H	7 m		
J	8 m		
K	9 m		

Note: The cable is enclosed in a flexible metal conduit or else is PVC sheathed.

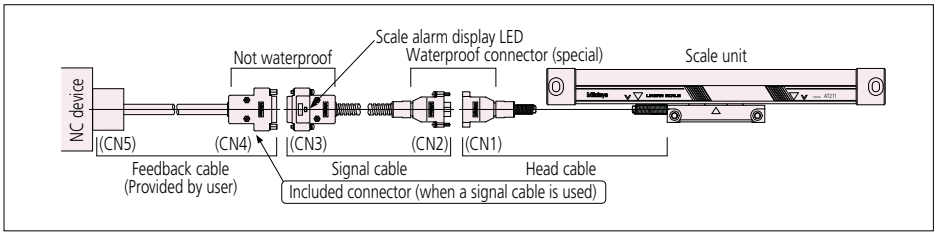

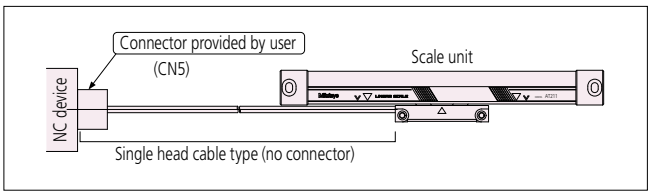

Single head cable type (no connector)

Unit: mm

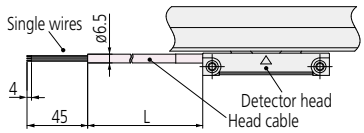

$\overline{ALM}$ signal for single head cable type (no connector)

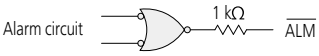

Equivalent to TC7S08 (Toshiba C-MOS)

High — Low (when alarm occurs)

Wire color	Signal	Wire color	Signal
White, black	0 V	Blue	$\overline{PB}$
Brown, red	+5 V	Purple	PZ
Orange	PA	Gray	$\overline{PZ}$
Yellow	$\overline{PA}$	Pink	$\overline{ALM}$
Green	PB		

Direction

Code	
● 1	Standard: PA goes ahead
2	Reverse: PB goes ahead

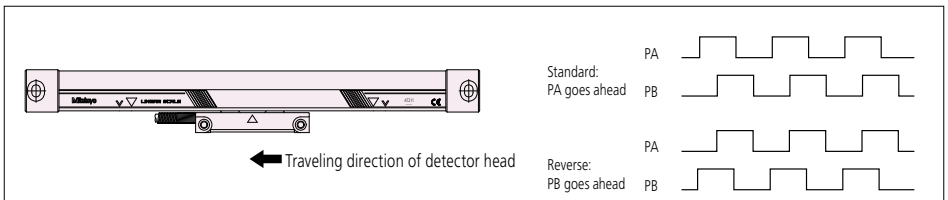

Note: These are settings for when the scale is moving.

Interface Unit

Pulse Signal Interface Unit

PSU-200

- The **PSU-200** splits the sinusoidal signal output by Mitutoyo linear scales into a minimum of four and a maximum of 200 divisions, and converts the signal to a square-wave signal so that NC feedback systems, measurement control devices, etc., can be used with linear scales in order to achieve highly accurate positioning.

System Configuration

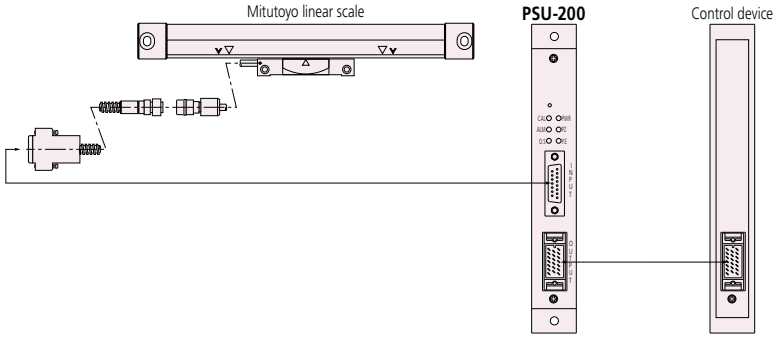

Dimensions

Unit: mm

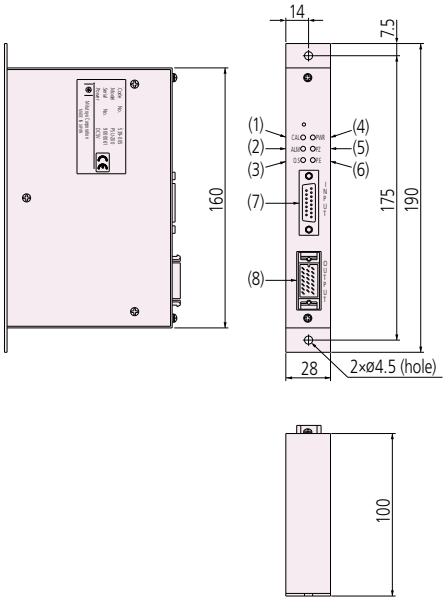

Name and function of each part

No.	Name	Function
(1)	CAL lamp	Usually unused
(2)	ALM lamp	Lights up when a broken wire or short circuit and an abnormal signal are detected in the linear scale.
(3)	O.S lamp	Lights up when an over-speed error is detected.
(4)	PWR lamp	Lights up only while power is being supplied to the PSU. The power is DC +5 V from an external device.
(5)	PZ lamp	Lights up when the detector head passes through the scale origin.
(6)	P.E lamp	Lights up when a low power and noise interferences are detected in the DC +5 V power supply from the external device.
(7)	INPUT connector	Connector for connecting with Linear Scale
(8)	OUTPUT connector	Connector for connecting with external device

Specifications

Order No.	539-005	
Items	**PSU-200**	
Number of axes	1	
Input	Input connector	DA-15S-NR (JAE) or equivalent
	Input signal	2-phase sinusoidal and the reference voltage, Reference point, Scale alarm
Output	Output connector	MR-20RMA (HONDA TSUSHIN KOGYO CO., LTD.)
	Output signal	2-phase square-wave signals: PA, $\overline{PA}$, PB, $\overline{PB}$ Line-driver differential signal output
		Reference point: PZ, $\overline{PZ}$ Line-driver differential signal output
		Alarm: $\overline{AL}$ CMOS output
		Alarm: AL (Collector), AL (Emitter) Photo-coupler
	Input signal	Alarm reset: AL (Anode), AL (Cathode) Photo-coupler
Number of divisions	4, 8, 10, 20, 40, 80, 100, 200 (Selectable by switch)	
Function	Setting the number of divisions, setting the minimum edge interval, and maximum response speed. Detection of broken wires or short circuits and abnormalities (alarm), detection of signal errors (alarm). Power supply voltage low alarm (warning light only), switching between high-impedance mode and alarm signal output mode. Reference position detection light, hysteresis width settings (directly linked to No. of divisions), external alarm reset input (Photo-coupler)	
Power supply voltage	5 VDC ±5%	
Current consumption	200 mA	
Storage temperature range	-20 °C to 70 °C	
Operating temperature range	0 °C to 50 °C	
Dimensions	160 (W)×100 (D)×28 (H) mm	
Mass	Approx. 620 g	

Mitutoyo

Output specification

Output connector (pin type)
MR-20RMA (HONDA TSUSHIN KOGYO CO., LTD.)
Applicable socket connector MR20F
(HONDA TSUSHIN KOGYO CO., LTD.)
Case MR-20L (HONDA TSUSHIN KOGYO CO., LTD.)
Standard accessory

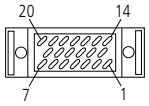

Pin No.	Signal	Description of the wave signal
1, 2, 3	0 V	Signal ground
4, 5, 6	+5 V	Power supply
7	$\overline{AL}$	Alarm output
8	AL (Collector)	Alarm output
9	AL (Emitter)	
10	AL (Anode)	Reset input
11	AL (Cathode)	
12, 13	N.C	Not used
14	PZ	Phase Z output
15	$\overline{PZ}$	
16	PA	Phase A output
17	$\overline{PA}$	
18	PB	Phase B output
19	$\overline{PB}$	
20	F.G	Frame ground

Maximum response speed

Setup		Maximum response speed (m/min)				Maximum input frequency (kHz)
Number of divisions	Minimum edge interval (ns)	Scale pitch				
		4 μm	10 μm	20 μm	40 μm	
4	62.5	120	300	600	1200	500
	125	120	300	600	1200	500
	250	120	300	600	1200	500
	500	120	300	600	1200	500
	1000	60	150	300	600	250
8	62.5	120	300	600	1200	500
	125	120	300	600	1200	500
	250	120	300	600	1200	500
	500	60	150	300	600	250
	1000	30	75	150	300	125
10	62.5	120	300	600	1200	500
	125	120	300	600	1200	500
	250	96	240	480	960	400
	500	48	120	240	480	200
	1000	24	60	120	240	100
20	62.5	120	300	600	1200	500
	125	96	240	480	960	400
	250	48	120	240	480	200
	500	24	60	120	240	100
	1000	12	30	60	120	50
40	62.5	96	240	480	960	400
	125	48	120	240	480	200
	250	24	60	120	240	100
	500	12	30	60	120	50
	1000	6	15	30	60	25
80	62.5	48	120	240	480	200
	125	24	60	120	240	100
	250	12	30	60	120	50
	500	6	15	30	60	25
	1000	3	7.5	15	30	12.5
100	62.5	38.4	96	192	384	160
	125	19.2	48	96	192	80
	250	9.6	24	48	96	40
	500	4.8	12	24	48	20
	1000	2.4	6	12	24	10
200	62.5	19.2	48	96	192	80
	125	9.6	24	48	96	40
	250	4.8	12	24	48	20
	500	2.4	6	12	24	10
	1000	1.2	3	6	12	5

The maximum response speed is limited depending on the scale response speed.
The minimum edge interval varies 0 to -10% based on the operating environmental conditions.

Connection (Example)

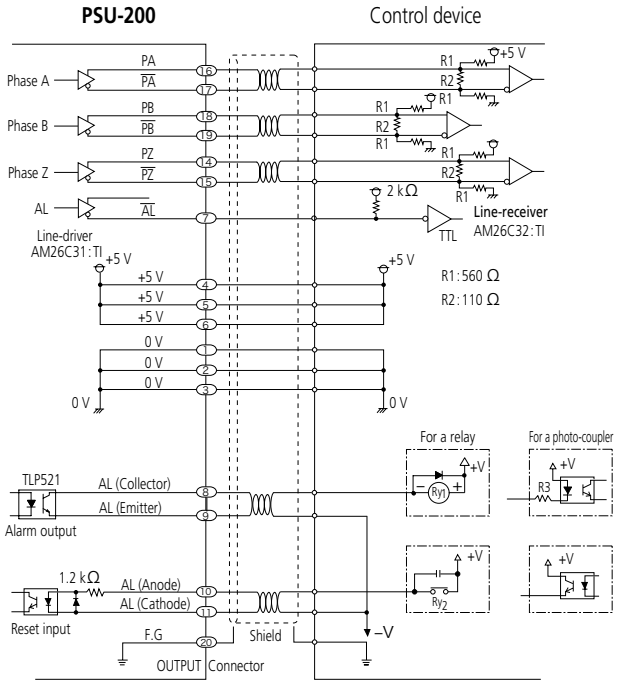

- Connect the alarm reset input circuit so that the current is 3 to 10 mA. Also, the device has an internal resistor (1.2 kΩ), so by applying 5 to 12 V with a pulse width of at least 100 ms across AL (anode)-AL (cathode), the alarm can be reset. When applying 12 V or more, add an external resistance to limit the current to within the range stated above.

- Alarm output specification
  - Line-driver output
    【For the high-impedance mode】
    All outputs become high-impedance.
    【For the alarm signal output mode】
    The AL signal turns from "H" level to "L" level.
    Active output signals (PA, $\overline{PA}$, PB, $\overline{PB}$, PZ, $\overline{PZ}$) are continued to be outputted.

  - Photo coupler output

————	Alarm output
When alarm occurs	Photo-couple output transistor: ○
During normal operation	Photo-couple output transistor: ○

PSU-250 Series

- **PSU-250** Series are interface units to convert sine wave signals from a Mitutoyo linear scale into serial signals.
- The interface outputs serial data equivalent to 400 divisions from the sinusoidal signal.
- The **PSU-251** can be connected to Mitsubishi Electric Corporation's MR-J4 Series servo amplifier.*
- The **PSU-252** can be connected to Panasonic Corporation's MINAS A5 Series servo amplifier.*

* Please contact each manufacturer for details of the applicable systems.

Name and function of each part

No.	Name	Function
(1)	INPUT connector	Connector for connecting with Linear Scale
(2)	OUTPUT connector	Connector for connecting with a servo amplifier
(3)	Terminal block	Terminal block for inputting external power DC +5 V
(4)	Short-circuit bracket	• Mount this on the terminal block when supplying power from the servo amplifier. • Remove this from the terminal block when supplying power from the external device.
(5)	PWR lamp	Lights up when power is supplied to the PSU. Blinks (green) when an alarm occurs

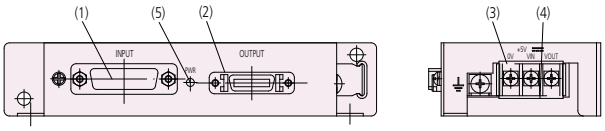

Specifications

Order No.	539-006	539-007
Items	**PSU-251**	**PSU-252**
Number of axes	1	1
Input	2-phase sinusoidal signals and standard voltage, reference signal, scale alarm signal. Maximum input frequency: 500 kHz	
Output	Mitsubishi Electric Corporation MR-J4 Series High-speed serial data*	Panasonic Corporation MINAS A5 Series*
Number of divisions	400	
Function	Alarm detection: Broken wires, short circuits in the scale and abnormalities. Alarm output: Status data is output through serial communication and the PWR light blinks. Also, the PWR light turns on.	
Power supply voltage	Power supply from the servo amplifier: 5 VDC ±5% External power supply: 5 VDC ±5% Power supply is selected with the shorting link for the terminal block used to supply external power. To choose a servo amplifier or external power supply, please refer to the servo amplifier power specifications (in particular, the maximum supplied current) and the power supply specifications of the scale that is used.	
Current consumption	150 mA (not including the scale)	
Storage temperature range	-20 °C to 70 °C	
Operating temperature range	0 °C to 40 °C	

* Please contact each manufacturer for details of the applicable systems.

Resolution and maximum response speed for various scales to be connected

Scale model	Resolution (μm)	Maximum response speed (mm/s)
AT113	0.05	2000
ST36A	0.01	1200
ST46-EZAC	0.05	2600

System configuration

• For connecting AT scale units

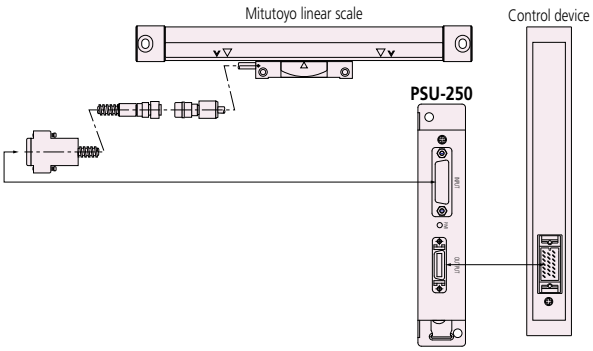

• For connecting ST scale units

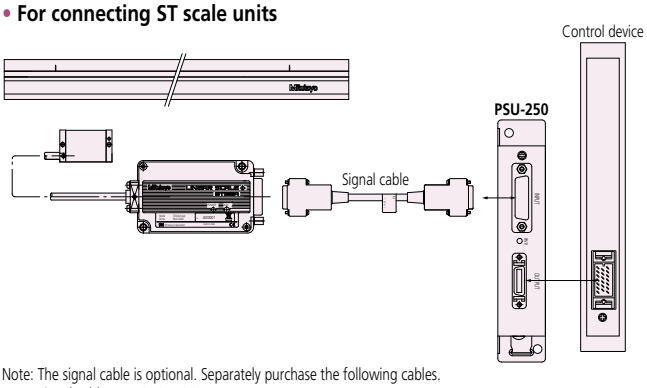

Note: The signal cable is optional. Separately purchase the following cables.
Signal cable 2 m: **970712-2**
3 m: **970712-3**
5 m: **970712-5**

Input specification

• INPUT connector

• Connector (socket type) : RDAD-15S-LNA (Hirose Electric)
• Applicable socket connector: HDAB-15P (Hirose Electric)

Pin No.	Signal	Description of the wave signal
1, 2	0 V	Signal ground
3, 4	+5 V	Power supply
5	PA	Phase A
6	PB	Phase B
7	Vref	Reference voltage
8	PZ	Phase Z
9	$\overline{AL}$	Scale alarm
10 - 14	N.C	Not used
15	F.G	Frame ground

Output specification

• OUTPUT connector

• Connector (socket type): 10220-52A2VC (3M)
• Applicable socket connector: 10120-3000VE (3M)

Pin No.	Signal	Description of the wave signal
1, 2, 11, 12	0 V	Signal ground
18, 19, 20	+5 V	+5 V power supply
6, 8 - 10	N.C	Not used
7	RQ/DT	Positive phase request/data
17	$\overline{RQ}/\overline{DT}$	Reverse phase request/data
3	PA	test signals
4	PB	test signals
5	PZ	test signals
13 - 16	N.C	Not used

• External power input (Terminal block)

Pin No.	Signal	Description of the wave signal
1	+5 V OUT	+5 V power output*
2	+5 V IN	+5 V power input*
3	0 V	Signal ground
4	F.G	Frame ground

* When using the servo amplifier supplied power (from the output connector), short-circuit pin 1 and pin 2 on the terminal block with the supplied bracket.
Note: Terminal screw: M3

Dimensions

Unit: mm

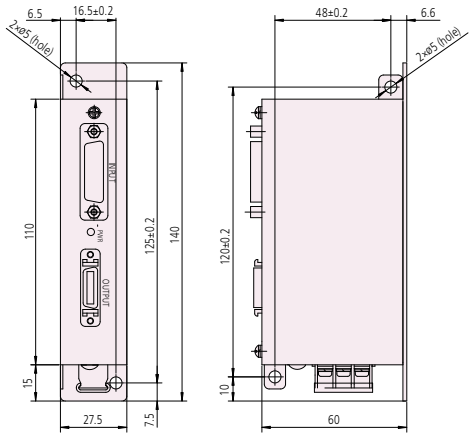

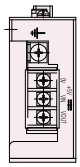

Absolute Scale Unit

ABS ST1300 Series (Double-ended mounting type)

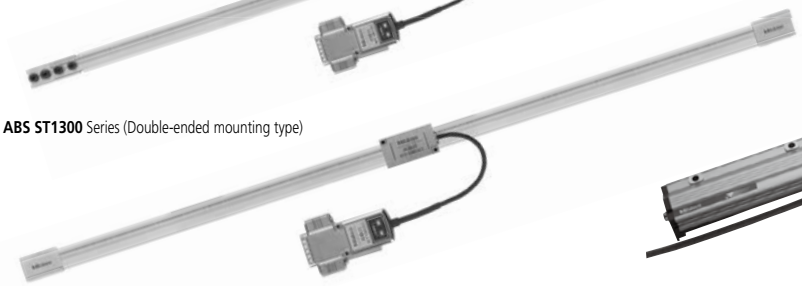

ABS ST1300 Series (Double-sided tape mounting type)

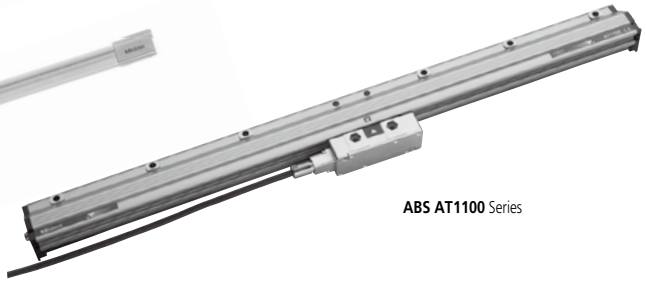

ABS AT1100 Series

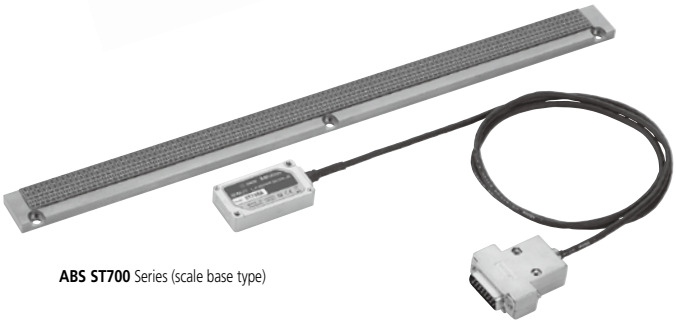

ABS ST700 Series (scale base type)

ABS AT1300 Series

Scale Format

Applicable Systems*			Resolution			
Maker name	SERVO Series	Interface	0.001 μm	0.01 μm	0.05 μm	0.1 μm
FANUC Ltd.	FANUC i Series CNC	α interface	**ABS ST1352** **ABS AT1357**	**ABS ST1351** **ABS AT1354**	**ABS AT1153** **ABS AT1353**	**ABS ST758**
		αi interface				—
Mitsubishi Electric Corporation	MDS-D/MDS-DH Series	Mitsubishi Electric Corporation high-speed serial (4 wire)	**ABS AT1347**	**ABS AT1344**	**ABS AT1143** **ABS AT1343**	**ABS ST748**
	MR-J3 Series	Mitsubishi Electric Corporation high-speed serial (2 wire)	—	—	—	**ABS ST748A**
	MR-J4 Series		**ABS ST1342A** **ABS AT1347A**	**ABS ST1341A** **ABS AT1344A**	**ABS AT1343A**	
Yaskawa Electric Corporation	Servopack Σ7 Series	Yaskawa Electric Corporation serial interface Σ-LINK	**ABS ST1382A**	**ABS ST1381A**	—	**ABS ST788A**
Panasonic Corporation	MINAS A5 Series	Panasonic Corporation I/F	**ABS ST1372A**	**ABS ST1371A**	—	**ABS ST778A**
Siemens AG	SINAMICS Series SINUMERIK Series	DRIVE-CLiQ interface	—	—	**ABS AT1123**	—
CKD Nikki Denso Co., Ltd.	VPH Series	Mitutoyo ENSIS Interface	**ABS ST1302A**	**ABS ST1301A**	—	**ABS ST708A**
Servoland Corporation	SVF Series		**ABS ST1302A** **ABS AT1307A**	**ABS ST1301A** **ABS AT1304A**	**ABS AT1103A** **ABS AT1303A**	
OMRON Corporation	Power-UMAC, Power-Clipper, Power-Brick Series CK3M					
Other control device manufacturers						

* For details regarding the applicable system, please consult with the individual manufacturer.

Specifications

Series		Scale Type	Maximum effective range (mm)	Maximum response speed (mm/s)	Accuracy (20 °C)*
ABS ST700 Series		Separate Type	6000	5000	(5 + 5L0/1000) µm
ABS ST1300 Series		Separate Type	12000	8000	±5 µm/m
ABS AT1300 Series	S Type	Assembly Type	2200	3000	(3 + 3L0/1000) µm
	H Type		1000		(2 + 2L0/1000) µm
ABS AT1100 Series		Assembly Type	3040	3000	(3 + 5L/1000) µm L=140 to 2040 mm (5 + 5L/1000) µm L=2240 to 3040 mm

* L_0=effective range (mm), This specification corresponds to the accuracy for the scale-base type in **ABS ST700** Series and that for the type with an effective measuring length of 1.1 m or more in **ABS ST1300** Series.

Direction of absolute unit scale data increase

- **ABS ST700** Series

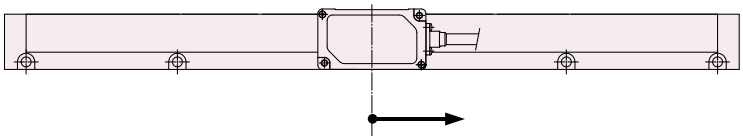

The data will increase when the detector moves in this direction.

- **ABS ST1300** Series

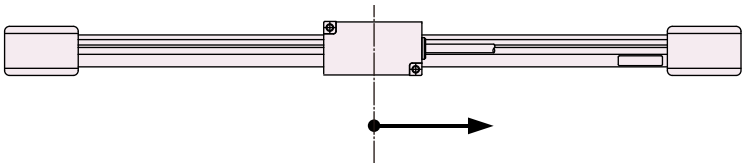

The data will increase when the detector moves in this direction.

- **ABS AT1100** Series

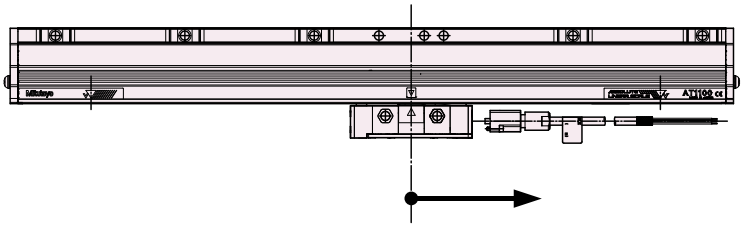

The data will increase when the detector moves in this direction.

- **ABS AT1300** Series

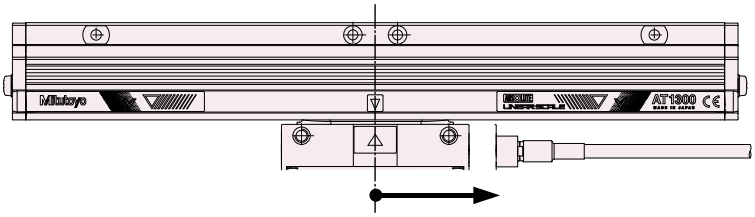

The data will increase when the detector moves in this direction.

ABS ST700 Series

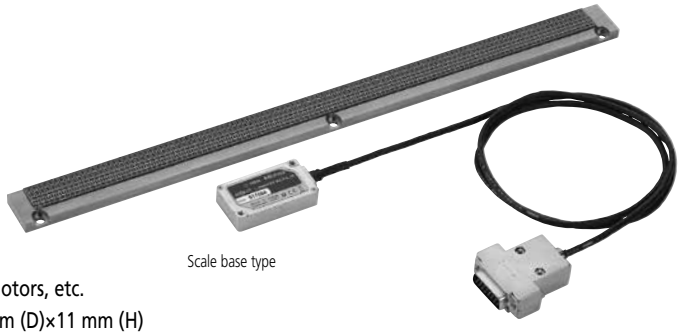

Scale base type

ABSOLUTE™

Features

- Electromagnetic induction ABS linear encoder with separate exposed scale.
- Non-contact detection is optimal for high speed and high acceleration of linear motors, etc.
- The detector head is approximately 1/3 the previous model size: 50 mm (W)×28 mm (D)×11 mm (H)
- Cable outlets can be in four directions, with mounting holes on the top and sides.
- Accuracy (5 + 5L/1000) μm is realized (previous models: (8 + 5L0/1000) μm).
  Note: L0: Effective range (mm)
- Compatible with servo amplifiers from a range of companies (high-speed serial interfaces).

Meaning of Model No.

ABS ST7 0 8 A L - 100 A - R

Absolute type

Series
Separate type Absolute linear scale
ABS ST700 Series (effective range≦3 m)
ABS ST700L Series (3.2 m≦effective range≦6 m)

Interface specification[*1]
0: For Mitutoyo ENSIS high-speed serial
ABS ST708A
4: Mitsubishi Electric Corporation high-speed serial
ABS ST748A, **ST748AL**
ABS ST748
5: FANUC Ltd. high-speed serial
ABS ST758, **ST758L**
7: Panasonic Corporation high-speed serial
ABS ST778A
8: Yaskawa Electric Corporation high-speed serial
ABS ST788A, **ST788AL**

Detector head shape and resolution
8: Shape 50 mm (W)×28 mm (D)×11 mm (H)
Resolution 0.1 μm

Blank: 100 mm to 3000 mm
L: 3200 mm to 6000 mm

Communication method
A: 2 wire
Blank: 4 wire

Effective range: 100 mm to 6000 mm

A: Scale base type

Head cable outlets
R: Right
L: Left
U: Up
D: Down

Available Interfaces

Available Interfaces[*1]	FANUC CORPORATION, FANUCi Series CNC
	Mitsubishi Electric Corporation, MITSUBISHI CNC Drive Unit MDS Series
	Mitsubishi Electric Corporation, MELSERVO Servo Amplifier MR-J4 Series, MR-J3 Series
	YASKAWA Electric Corporation, SERVOPACK Σ7 Series
	Panasonic Corporation, MINAS A5 Series
	Mitutoyo ENSIS[*2] CKD Nikki Denso Co., Ltd., VPH Series Servoland Corporation, SVF Series OMRON Corporation, Power-UMAC, Power-Clipper, Power-Brick, CK3M Series

*1 Be sure to contact each manufacturer for details of the applicable systems (availability of connection).
*2 ENSIS is a registered trademark of Mitutoyo Corporation.

Specifications

Item / Scale Type		Scale base type	
Resolution		0.1 µm	
Detection method		Electromagnetic induction Absolute position detection method*	
Shape		Separate type scale	
Effective range (accuracy guarantee range)		100 to 3000 mm	3200 to 6000 mm
Accuracy (20 °C)		(5 + 5L0/1000) µm L0: Effective range (mm)	(5 + 5L0/1000) µm L0: Effective range (mm)
Maximum response speed		5000 mm/s	
Thermal expansion coefficient		≈12×10^{-6}/K	
Operating conditions	Temperature	0 to 50 °C	
	Humidity	20 to 80%RH (non-condensing)	20 to 70%RH (non-condensing)
Storage conditions	Temperature	-20 to 70 °C	-20 to 60 °C
	Humidity	20 to 80%RH (non-condensing)	20 to 70%RH (non-condensing)
Power supply voltage		5 V±10% (at the detector head) (Ripple and spike noise should not exceed 100 mV)	
Current consumption		270 mA (Max.)	
Vibration resistance		300 m/s^2 (55 to 2000 Hz)	
Shock resistance		500 m/s^2 (1/2 sin, 11 ms)	
Head cable	Length/cable diameter	1 m/ø3.8 mm (high-flex cable)	
	Connector	1) D-sub (15-pin pin type) connector (not waterproof) 2) D-sub (9-pin socket type) connector (not waterproof): for ST788A	
Maximum signal cable length		Up to 29 m (head cable length included) (Please consult the user's manual)	
Detector mounting		1 location each on top and sides	
Direction of cable outlet		4 sides (top, bottom, left, right) can be selected	
EMC standard		CE mark standard	

* For details about the signal adjustment method when mounting this series, refer to page 38.

System configuration

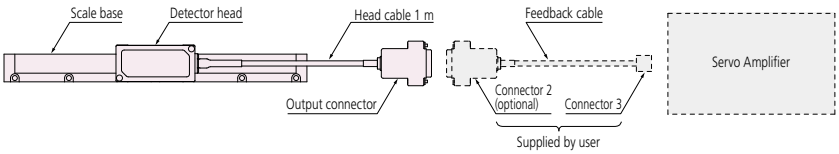

◇ Feedback cable

- Yaskawa Electric Corporation serial cable can be used as the feedback cable for connecting to the Yaskawa Electric Corporation servo amplifier.
  Cable type number: JZSP-CLP70-□□-E (03,05,10,15,20)
- For the feedback cable to connect to Mitsubishi Electric Corporation MR-J4/MR-J3 Series, place an order with Mitutoyo with the following order No. specified.
  Feedback cable for MR-J4/MR-J3 Series, 5 m: **06ACF117A**, 10 m: **06ACF117B**

Output specifications

• ST788A (L)

Output connector (socket type)
D-sub 9-pin
Applicable connector
17JE-23090-02 (D2C) (DDK)
Alternately, an equivalent product (D-sub series) can be used

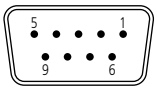

Pin No.	Signal
1	+5 V (Vcc)
2	RQ/DT (S)
3	+5 V (Vcc)
4	N.C
5	0V (GND)
6	$\overline{RQ}$/$\overline{DT}$ (/S)
7	N.C
8	N.C
9	0V (GND)
Connector shell	F.G

Note: Leave test terminals (Pin No. 7 and 8) disconnected during use.

• ST748A (L), ST778A (L), ST708A (L)

Output connector (pin type)
D-sub 15-pin
Applicable connector
HDAB-15S (Hirose Electric)
Alternately, an equivalent product (D-sub series) can be used

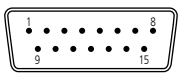

Pin No.	Signal
1	0 V (GND)
2	0 V (GND)
3	+5 V
4	+5 V
5	N.C
6	N.C
7	RQ/DT
8	$\overline{RQ}$/$\overline{DT}$
9	N.C
10	N.C
11	+5 V
12	N.C
13	0V (GND)
14	N.C
15	F.G
Connector shell	F.G

Note: Leave test terminals (Pin No. 9 and 10) disconnected during use.

• ST748 (L), ST758 (L)

Output connector (pin type)
D-sub 15-pin
Applicable connector
HDAB-15S (Hirose Electric)
Alternately, an equivalent product (D-sub series) can be used

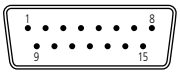

Pin No.	Signal
1	0 V (GND)
2	0 V (GND)
3	+5 V
4	+5 V
5	DT
6	$\overline{DT}$
7	RQ
8	$\overline{RQ}$
9	N.C
10	N.C
11	+5 V
12	N.C
13	0V (GND)
14	N.C
15	F.G
Connector shell	F.G

Note: Leave test terminals (Pin No. 9 and 10) disconnected during use.

Mounting dimensions

• Scale base type (100 to 3000 mm)

Unit: mm

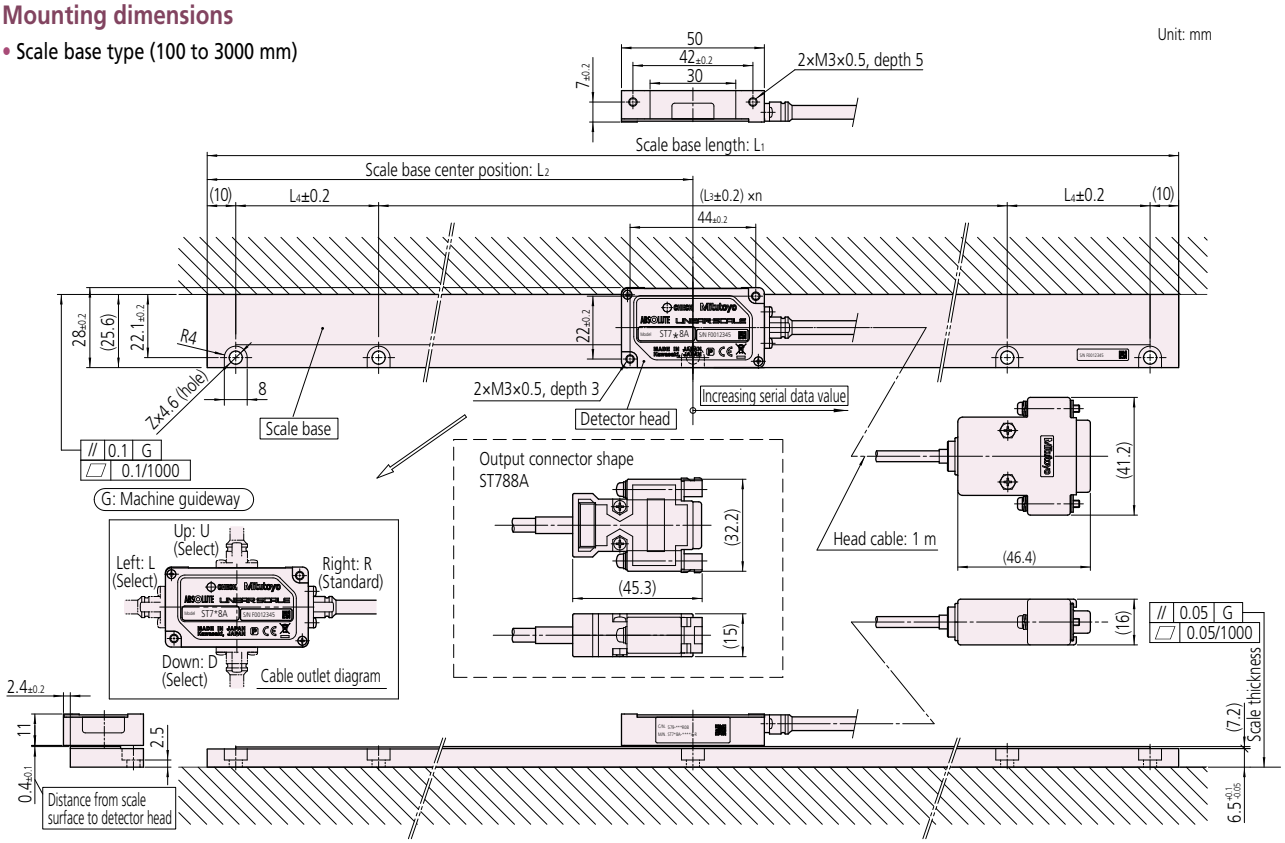

Dimensions

Order No.	Model	Effective range L_0 (mm)	Maximum travel length (mm)	L_1 (mm)	L_2 (mm)	L_3 (mm)	n	L_4 (mm)	Z
579-301*□ 8	**ST7◇8 (A) -100A-***	100	110	180	90	80	2	—	3
579-302*□ 8	**ST7◇8 (A) -200A-***	200	210	280	140	130			
579-303*□ 8	**ST7◇8 (A) -300A-***	300	310	380	190	180			
579-304*□ 8	**ST7◇8 (A) -400A-***	400	410	480	240	230			
579-305*□ 8	**ST7◇8 (A) -500A-***	500	510	580	290	200		80	5
579-306*□ 8	**ST7◇8 (A) -600A-***	600	610	680	340			130	
579-307*□ 8	**ST7◇8 (A) -700A-***	700	710	780	390			180	
579-308*□ 8	**ST7◇8 (A) -800A-***	800	810	880	440			230	
579-309*□ 8	**ST7◇8 (A) -900A-***	900	910	980	490		4	80	7
579-310*□ 8	**ST7◇8 (A) -1000A-***	1000	1010	1080	540			130	
579-311*□ 8	**ST7◇8 (A) -1100A-***	1100	1110	1180	590			180	
579-312*□ 8	**ST7◇8 (A) -1200A-***	1200	1210	1280	640			230	
579-313*□ 8	**ST7◇8 (A) -1300A-***	1300	1310	1380	690		6	80	9
579-314*□ 8	**ST7◇8 (A) -1400A-***	1400	1410	1480	740			130	
579-315*□ 8	**ST7◇8 (A) -1500A-***	1500	1510	1580	790			180	
579-316*□ 8	**ST7◇8 (A) -1600A-***	1600	1610	1680	840			230	
579-317*□ 8	**ST7◇8 (A) -1700A-***	1700	1710	1780	890		8	80	11
579-318*□ 8	**ST7◇8 (A) -1800A-***	1800	1810	1880	940			130	
579-319*□ 8	**ST7◇8 (A) -1900A-***	1900	1910	1980	990			180	
579-320*□ 8	**ST7◇8 (A) -2000A-***	2000	2010	2080	1040			230	
579-321*□ 8	**ST7◇8 (A) -2100A-***	2100	2110	2180	1090		10	80	13
579-322*□ 8	**ST7◇8 (A) -2200A-***	2200	2210	2280	1140			130	
579-323*□ 8	**ST7◇8 (A) -2300A-***	2300	2310	2380	1190			180	
579-324*□ 8	**ST7◇8 (A) -2400A-***	2400	2410	2480	1240			230	
579-325*□ 8	**ST7◇8 (A) -2500A-***	2500	2510	2580	1290		12	80	15
579-326*□ 8	**ST7◇8 (A) -2600A-***	2600	2610	2680	1340			130	
579-327*□ 8	**ST7◇8 (A) -2700A-***	2700	2710	2780	1390			180	
579-328*□ 8	**ST7◇8 (A) -2800A-***	2800	2810	2880	1440			230	
579-329*□ 8	**ST7◇8 (A) -2900A-***	2900	2910	2980	1490		14	80	17
579-330*□ 8	**ST7◇8 (A) -3000A-***	3000	3010	3080	1540			130	

The ◇ code indicates the interface specification (0, 4, 5, 7, 8).
The Order No. and the * code indicate the direction of the head cable (R, L, U, D).
The □ in the Order No. is as described below.

ST708A: **0**
ST748A: **4**
ST748 : **3**
ST758 : **5**
ST778A: **7**
ST788A: **8**

Mounting dimensions

• Scale base type (3200 to 6000 mm)

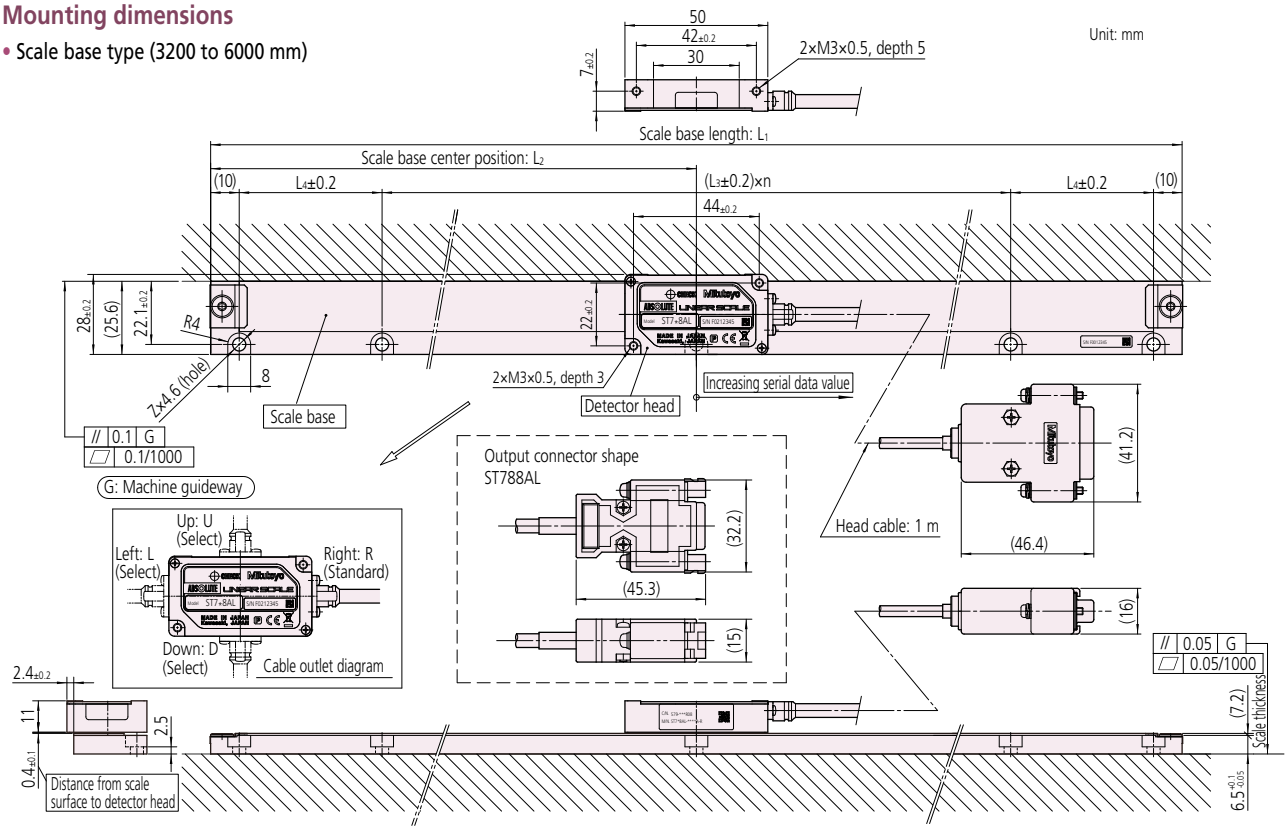

Dimensions

Order No.	Model	Effective range L_0 (mm)	Maximum travel length (mm)	L_1 (mm)	L_2 (mm)	L_3 (mm)	n	L_4 (mm)	Z
579-331*□ 8	**ST7◇8 (A) L-3200A-***	3200	3210	3280	1640	200	14	230	17
579-332*□ 8	**ST7◇8 (A) L-3400A-***	3400	3410	3480	1740		16	130	19
579-333*□ 8	**ST7◇8 (A) L-3600A-***	3600	3610	3680	1840		16	230	19
579-334*□ 8	**ST7◇8 (A) L-3800A-***	3800	3810	3880	1940		18	130	21
579-335*□ 8	**ST7◇8 (A) L-4000A-***	4000	4010	4080	2040		18	230	21
579-336*□ 8	**ST7◇8 (A) L-4200A-***	4200	4210	4280	2140		20	130	23
579-337*□ 8	**ST7◇8 (A) L-4400A-***	4400	4410	4480	2240		20	230	23
579-338*□ 8	**ST7◇8 (A) L-4600A-***	4600	4610	4680	2340		22	130	25
579-339*□ 8	**ST7◇8 (A) L-4800A-***	4800	4810	4880	2440		22	230	25
579-340*□ 8	**ST7◇8 (A) L-5000A-***	5000	5010	5080	2540		24	130	27
579-341*□ 8	**ST7◇8 (A) L-5200A-***	5200	5210	5280	2640		24	230	27
579-342*□ 8	**ST7◇8 (A) L-5400A-***	5400	5410	5480	2740		26	130	29
579-343*□ 8	**ST7◇8 (A) L-5600A-***	5600	5610	5680	2840		26	230	29
579-344*□ 8	**ST7◇8 (A) L-5800A-***	5800	5810	5880	2940		28	130	31
579-345*□ 8	**ST7◇8 (A) L-6000A-***	6000	6010	6080	3040		28	230	31

The ◇ code indicates the interface specification (0, 4, 5, 7, 8).
The Order No. and the * code indicate the direction of the head cable (R, L, U, D).
The □ in the Order No. is as described below.

ST748AL: **4**
ST758L : **5**
ST788AL: **8**

Signal Adjusting Method When Mounting **ABS ST700** Series

- In order to perform signal adjustment and confirmation after the unit is mounted, conditioning is necessary using a PC and application software (**ABS ST700** Signal Adjustment Program). (For conditioning, allow a travel distance of at least 60 mm.)
  The following settings and confirmation are possible with this software:
  1) Scale signal automatic adjustment → It is necessary to mount the scale base and detector head detector with specified dimensions.
  2) Scale signal amplitude (signal strength) confirmation
  3) Scale origin (absolute position data of zero) setting
  4) Absolute position data confirmation
  5) Error history clear
  6) ABS resultant error checking (effective range 3200 mm to 6000 mm)

- **Required items**

Item	Quantity	Details	Notes
PC*	1	DOS/V (Windows version)	Provided by user
Conversion unit	1	USB-485(422)DS15P (System Sacom Industry Corp.)	Optional (bundle)
Connection cable A	1	USB cable	
Connection cable B	1	RS-485 cable or RS-422 cable	
Application software	1	ABS ST700 Signal Adjustment Program	

* This program requires a PC with the following operating environment.
CPU : 1 GHz or faster
Memory : 1 GB min.
Program size: 10 MB
OS : Windows 7 or later
Monitor : 1024×768 or higher is recommended

- **"Conversion unit, application software" set**

Order No.	Applicable model	Conversion unit	Connection cable B
06ADZ751	ST708A	USB-485 DS15P (main unit)	MIT cable
06ADT457	ST748A, ST748AL	USB-485 DS15P (main unit)	MEL cable
06ADP485	ST778A, ST788A, ST788AL	USB-485 DS15P (main unit)	Y/MAT cable
06ADZ752	ST748	USB-422 DS15P (main unit)	MDS cable
06ADR760	ST758, ST758L	USB-422 DS15P (main unit)	FANUC cable

- **Connection method**

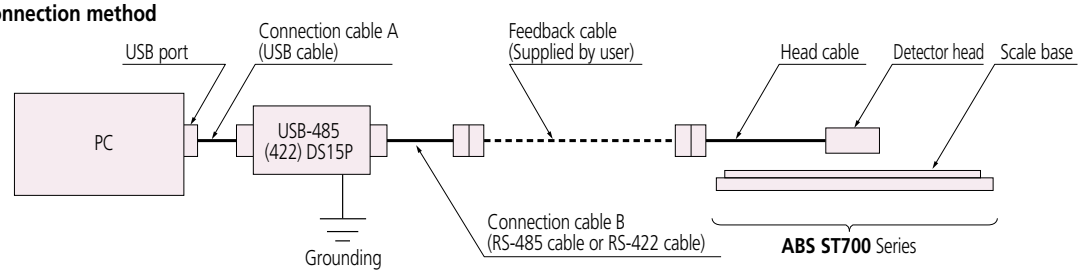

Note 1: To prevent the possibility of electric shock the device must be grounded.
Note 2: When using Order No. 06ADZ751, connect the head cable and the connection cable B together.
Note 3: The conversion unit's power source is supplied via connection cable A from the PC USB port.

Compatibility of Detector Head and Main Scale

- Note that for the **ST700** Series (compact type) with an effective range 3000 mm or less or 3200 mm or more, the main scale and the detector head are different so they are not compatible.
- The communication standards are different for the ST7 □□ (L) and ST7 □□ A (L), so they are not compatible.

Main scale		Detector head
For effective range of 3200 mm to 6000 mm	← Compatible →	For effective range of 3200 mm to 6000 mm
	Not compatible	
For effective range of 3000 mm or less	← Compatible →	For effective range of 3000 mm or less

ABS ST1300 Series

Double-ended mounting type

Double-sided tape mounting type

Features

- Effective length: 12 m, Maximum response speed: 8 m/s, Resolution: 1 nm
- Various interfaces are supported.
- A new detection method has improved robustness in regards to contamination resistance and gap tolerance (in-house testing result).
- Can be mounted using double-sided tape or screws (on both sides or at the center of the unit).
  For center and double sided tape mounted models, tape scale and detector are available as a single components.
- Signal check program enables integrity check and maintenance.

Meaning of Model No.

ABS ST13 4 1 A - 1200 D

Absolute type

Series name
Separate Type ABSOLUTE Linear Scale

Interface specification
0: Supports Mitutoyo ENSIS high-speed serial interface
ABS ST130□A
4: Supports Mitsubishi Electric Corporation high-speed serial interface
ABS ST134□A
5: Supports FANUC Ltd. high speed serial interface
ABS ST135□
7: Supports Panasonic Corporation, high-speed serial interface
ABS ST137□A
8: Supports Yaskawa Electric Corporation high-speed serial interface
ABS ST138□A

Resolution
1: Resolution 0.01 μm
2: Resolution 0.001 μm

Transmission method
A: When 0, 4, 7, or 8 is selected in the interface specification listed on the left
Nothing: When 5 is selected in the interface specification listed on the left

Effective range: 10 mm to 12000 mm

Scale mount
D: Double-ended mounting type
E: Double-sided tape mounting type
F: Center mounting (Without system parameters)
G: Center mounting (With system parameters)

Available Interfaces

Applicable interfaces*	Mitutoyo ENSIS
	Mitsubishi Electric Corporation, MELSERVO Servo Amplifier MR-J4 Series
	FANUC Ltd., FANUC i Series CNC
	Panasonic Corporation, MINAS A5 Series
	Yaskawa Electric Corporation, SERVOPACK Σ-7 Series

* Be sure to contact each manufacturer for details of the applicable systems (availability of connection).

System Configuration

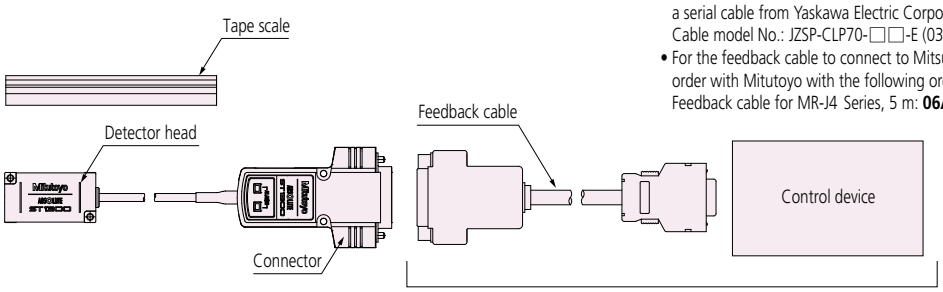

◇ About the feedback cable
- For the feedback cable to connect to the Yaskawa Electric Corporation's servo amplifier, a serial cable from Yaskawa Electric Corporation is available.
  Cable model No.: JZSP-CLP70-□□-E (03,05,10,15, 20)
- For the feedback cable to connect to Mitsubishi Electric Corporation MR-J4 Series, place an order with Mitutoyo with the following order No. specified.
  Feedback cable for MR-J4 Series, 5 m: **06ACF117A**, 10 m: **06ACF117B**

Note: The feedback cable and control device are to be constructed and connected by the client.
If the feedback cable from Yaskawa Electric Corporation is used, the ST1380A connecting cable (optional: 06AFA434A) is needed.

ST1380A Connection cable

Order No.	Cable length (m)
06AFA434A	200
06AFA434B	500
06AFA434C	1000

Specifications

Item \ Model	ABS ST1300			
Detection method	Optical linear encoder			
Scale type	Metal tape			
	Double-ended mounting	Center mounting	Double-sided tape mounting	
Maximum effective range	12 m	6 m	3 m	
Fixing part material	—	—	Equivalent to iron	Other than equivalent to iron
Indication accuracy (20 °C)	±5 μm (1 m or less) ±5 μm/m (1.1 m or more)*4	With system parameters ±5 μm (1 m or less) ±5 μm/m (1.1 m or more) Without system parameters ±10 μm (1 m or less) ±10 μm/m (1.1 m or more)	±5 μm (1 m or less) ±5 μm/m (1.1 m or more)	
Resolution	0.001 μm/0.01 μm (Defined within the Scale code)			
Maximum response speed	8000 mm/s			
Applicable Interfaces	Mitsubishi Electric Corporation I/F, Yaskawa Electric Corporation I/F, Panasonic Corporation I/F, FANUC Ltd. I/F, Mitutoyo ENSIS I/F			
Thermal expansion coefficient	≈10×10^{-6}/K*5	≈10×10^{-6}/K	≈10×10^{-6}/K*2	
GAP allowance	Initial: ±0.1 mm Kinetic: ±0.2 mm			
Cable length	1 m (Highly curved cable)			
Detector size	40 (D)×22 (W)×23 (H) mm			
Operation temperature	0 to 50 °C			0 to 50 °C*1 When mounting: ±10 °C
Storage temperature	-20 to 70 °C			-20 to 70 °C*3

*1 Double-sided tape mounting type, careful for the condition of operating temperature range, in case that the sealing surface material is except for Fe equivalent.
*2 Thermal expansion coefficient occasionally change, as the difference between scale material's and sealing surface material's is excessive.
*3 Double-sided tape mounting type, the accuracy compensation occasionally change, in case that the sealing surface material is except for Fe equivalent and stored in environment over operating temperature range. Imaging these conditions, double-ended mounting type is adopted.
*4 Tension fix is adopted to be stable the temperature property. Because scale tension is longer 250 μm/m, the accuracy compensation is needed over the system.
*5 Thermal expansion coefficient after mounted conform to expansion/contraction of mounted surface by changing outer temperature (Double-ended mounting type).

Relation between resolution for each supported interface, maximum effective range, and maximum response speed

	Resolution (nm)	Maximum effective range (mm)			Maximum response speed (m/s)
		Double-ended mounting	Center mounting	Double-sided tape mounting	
Mitsubishi Electric Corporation	10	12000	6000	3000	4
	1	±2100 (* Reference)	±2100 (* Reference)	±1500 (* Reference)	4
FANUC Ltd.	10	12000	6000	3000	8
	1	±2100 (* Reference)	±2100 (* Reference)	±1500 (* Reference)	8
Panasonic Corporation	10	12000	6000	3000	4
	1	±2100 (* Reference)	±2100 (* Reference)	±1500 (* Reference)	0.4
Yaskawa Electric Corporation	10	12000	6000	3000	8
	1	±1800 (* Reference)	±1800 (* Reference)	±1500 (* Reference)	3.6
Mitutoyo ENSIS	10	12000	6000	3000	8
	1	±2100 (* Reference)	±2100 (* Reference)	±1500 (* Reference)	8

* When the center of the effective range is set zero (ORIGIN) at default setting. When zero-set is executed at the edge of the scale, the maximum effective range will change.

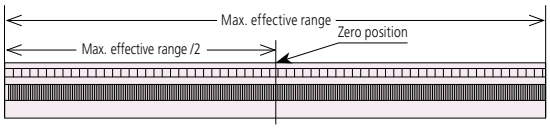

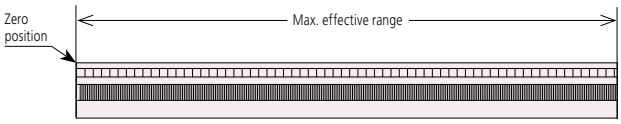

Max. effective range

(Double-ended mounting): -2100 mm to +2100 mm
(Mitsubishi Electric Corporation, Panasonic Corporation, Mitutoyo ENSIS)
-1800 mm to +1800 mm
(Yaskawa Electric Corporation)

(Double-sided tape mounting): -1500 mm to +1500 mm

Max. effective range

(Double-ended mounting/Center mounting/Double-sided tape mounting: 0 mm to +2100 mm
(Mitsubishi Electric Corporation, Panasonic Corporation, Mitutoyo ENSIS)
0 mm to +1800 mm
(Yaskawa Electric Corporation)

Output specification

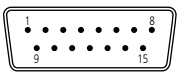

Output connector (pin type)
D-sub 15-pin
Applicable connector
HDAB-15S (Hirose Electric)
Alternately, an equivalent product (D-sub series) can be used

• Pin assignment for Mitutoyo ENSIS and Mitsubishi Electric Corporation MELSERVO

Pin No.	Signal	Pin No.	Signal
1, 2	0 V (LG)	10	N.C
3, 4	+5 V (P5)	11	+5 V (P5)
5	N.C	12	N.C
6	N.C	13	0 V (LG)
7	MR (RQ/DT)	14	N.C
8	MRR (_RQ/_DT)	15	F.G
9	N.C	Connector shell	F.G

• Pin assignment for FANUC Ltd. α/αi

Pin No.	Signal	Pin No.	Signal
1, 2	GND	10	N.C
3, 4	+5 V	11	+5 V
5	SD or SD/REQ	12	N.C
6	_SD or _SD/_REQ	13	GND
7*	REQ or TEST	14	N.C
8*	_REQ or _TEST	15	F.G
9	N.C	Connector shell	F.G

* TEST/_TEST signal: Used as a communication line when checking signal.

• Pin assignment for Panasonic Corporation MINAS

Pin No.	Signal	Pin No.	Signal
1, 2	GND	10	N.C
3, 4	+5 V	11	+5 V
5	N.C	12	N.C
6	N.C	13	GND
7	+REQ/+SD	14	N.C
8	-REQ/-SD	15	F.G
9	N.C	Connector shell	F.G

• Pin assignment for Yaskawa Electric Corporation Σ Series

Pin No.	Signal	Pin No.	Signal
1, 2	GND	10	N.C
3, 4	VCC	11	VCC
5	N.C	12	N.C
6	N.C	13	GND
7	S	14	N.C
8	/S	15	F.G
9	N.C	Connector shell	F.G

External View

- **Double-ended mounting type (Effective range: 500 to 1000 mm)**

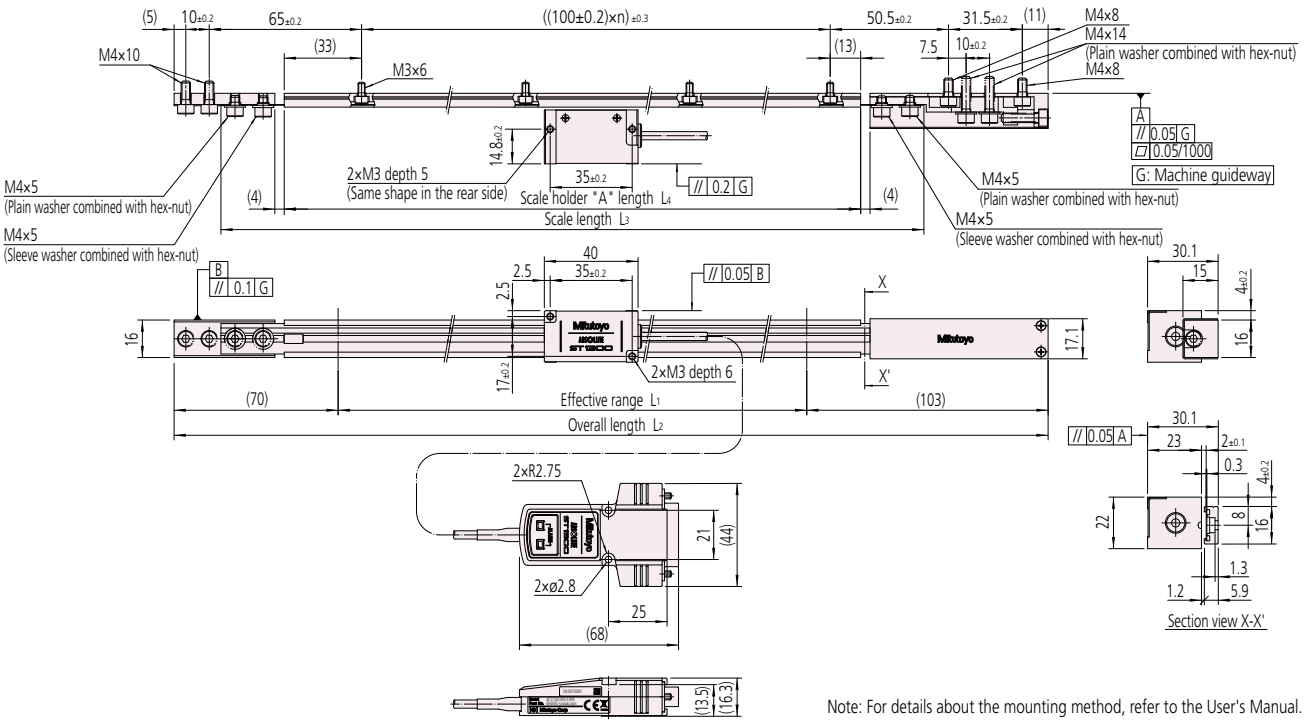

Note: For details about the mounting method, refer to the User's Manual.

Dimensions

- **Resolution: 0.01 µm**

Order No.	Model	Effective range L_0 (mm)	Overall length L_2 (mm)	Scale length L_3 (mm)	Scale holder A L_4 (mm)	n
579-434-□1	**ST13◇1(A)-00500D**	500	673	600	546	5
579-435-□1	**ST13◇1(A)-00600D**	600	773	700	646	6
579-436-□1	**ST13◇1(A)-00700D**	700	873	800	746	7
579-437-□1	**ST13◇1(A)-00800D**	800	973	900	846	8
579-438-□1	**ST13◇1(A)-00900D**	900	1073	1000	946	9
579-439-□1	**ST13◇1(A)-01000D**	1000	1173	1100	1046	10

Dimensions

- **Resolution: 0.001 µm**

Order No.	Model	Effective range L_0 (mm)	Overall length L_2 (mm)	Scale length L_3 (mm)	Scale holder A L_4 (mm)	n
579-434-□2	**ST13◇2(A)-00500D**	500	673	600	546	5
579-435-□2	**ST13◇2(A)-00600D**	600	773	700	646	6
579-436-□2	**ST13◇2(A)-00700D**	700	873	800	746	7
579-437-□2	**ST13◇2(A)-00800D**	800	973	900	846	8
579-438-□2	**ST13◇2(A)-00900D**	900	1073	1000	946	9
579-439-□2	**ST13◇2(A)-01000D**	1000	1173	1100	1046	10

The □ in the Order No. indicates the interface specification (0, 4, 5, 7, 8).
The ◇ code indicates the interface specification (0, 4, 5, 7, 8).

External View

- **Double-ended mounting type (Effective range: 1100 to 12000 mm)**

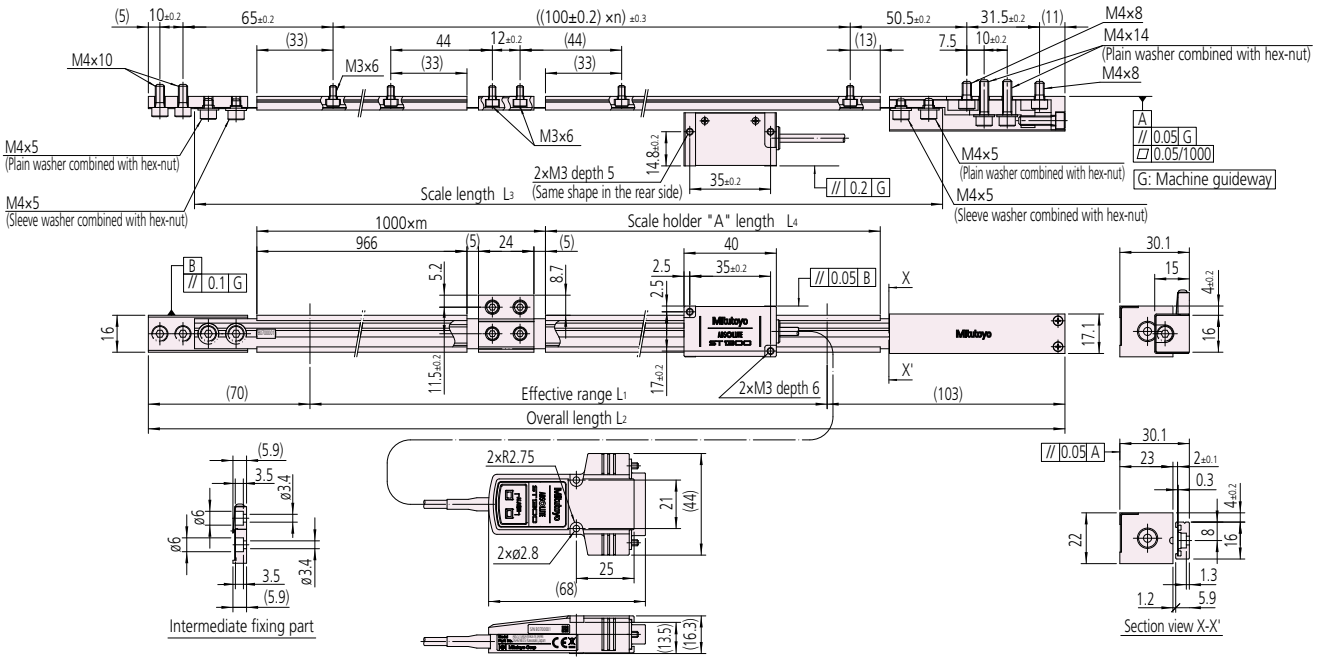

Note: For details about the mounting method, refer to the User's Manual.

Dimensions

- **Resolution: 0.01 µm**

Order No.	Model	Effective range L0 (mm)	Overall length L2 (mm)	Scale length L3 (mm)	Scale holder A L4 (mm)	n
579-440-□1	**ST13◇1(A)-01100D**	1100	1273	1200	146	11
579-441-□1	**ST13◇1(A)-01200D**	1200	1373	1300	246	12
579-442-□1	**ST13◇1(A)-01300D**	1300	1473	1400	346	13
579-443-□1	**ST13◇1(A)-01400D**	1400	1573	1500	446	14
579-444-□1	**ST13◇1(A)-01500D**	1500	1673	1600	546	15
579-445-□1	**ST13◇1(A)-01600D**	1600	1773	1700	646	16
579-446-□1	**ST13◇1(A)-01700D**	1700	1873	1800	746	17
579-447-□1	**ST13◇1(A)-01800D**	1800	1973	1900	846	18
579-448-□1	**ST13◇1(A)-02000D**	2000	2173	2100	1046	20
579-449-□1	**ST13◇1(A)-02200D**	2200	2373	2300	246	22
579-450-□1	**ST13◇1(A)-02400D**	2400	2573	2500	446	24
579-451-□1	**ST13◇1(A)-02500D**	2500	2673	2600	546	25
579-452-□1	**ST13◇1(A)-02600D**	2600	2773	2700	646	26
579-453-□1	**ST13◇1(A)-02800D**	2800	2973	2800	846	28
579-454-□1	**ST13◇1(A)-03000D**	3000	3173	3100	1046	30
579-455-□1	**ST13◇1(A)-03200D**	3200	3373	3300	246	32
579-456-□1	**ST13◇1(A)-03400D**	3400	3573	3500	446	34
579-457-□1	**ST13◇1(A)-03600D**	3600	3773	3700	646	36
579-458-□1	**ST13◇1(A)-03800D**	3800	3973	3900	846	38
579-459-□1	**ST13◇1(A)-04000D**	4000	4173	4100	1046	40
579-460-□1	**ST13◇1(A)-04200D**	4200	4373	4300	246	42
579-461-□1	**ST13◇1(A)-04400D**	4400	4573	4500	446	44
579-462-□1	**ST13◇1(A)-04600D**	4600	4773	4700	646	46
579-463-□1	**ST13◇1(A)-04800D**	4800	4973	4900	846	48
579-464-□1	**ST13◇1(A)-05000D**	5000	5173	5100	1046	50
579-465-□1	**ST13◇1(A)-05200D**	5200	5373	5300	246	52
579-466-□1	**ST13◇1(A)-05400D**	5400	5573	5500	446	54
579-467-□1	**ST13◇1(A)-05600D**	5600	5773	5700	646	56
579-468-□1	**ST13◇1(A)-05800D**	5800	5973	5900	846	58
579-469-□1	**ST13◇1(A)-06000D**	6000	6173	6100	1046	60
579-470-□1	**ST13◇1(A)-06200D**	6200	6373	6300	246	62
579-471-□1	**ST13◇1(A)-06400D**	6400	6573	6500	446	64
579-472-□1	**ST13◇1(A)-06600D**	6600	6773	6700	646	66
579-473-□1	**ST13◇1(A)-06800D**	6800	6973	6900	846	68
579-474-□1	**ST13◇1(A)-07000D**	7000	7173	7100	1046	70
579-475-□1	**ST13◇1(A)-07200D**	7200	7373	7300	246	72
579-476-□1	**ST13◇1(A)-07400D**	7400	7573	7500	446	74
579-477-□1	**ST13◇1(A)-07600D**	7600	7773	7700	646	76
579-478-□1	**ST13◇1(A)-07800D**	7800	7973	7900	846	78
579-479-□1	**ST13◇1(A)-08000D**	8000	8173	8100	1046	80
579-480-□1	**ST13◇1(A)-08200D**	8200	8373	8300	246	82
579-481-□1	**ST13◇1(A)-08400D**	8400	8573	8500	446	84
579-482-□1	**ST13◇1(A)-08600D**	8600	8773	8700	646	86
579-483-□1	**ST13◇1(A)-08800D**	8800	8973	8900	846	88
579-484-□1	**ST13◇1(A)-09000D**	9000	9173	9100	1046	90
579-485-□1	**ST13◇1(A)-09200D**	9200	9373	9300	246	92
579-486-□1	**ST13◇1(A)-09400D**	9400	9573	9500	446	94
579-487-□1	**ST13◇1(A)-09600D**	9600	9773	9700	646	96
579-488-□1	**ST13◇1(A)-09800D**	9800	9973	9900	846	98
579-489-□1	**ST13◇1(A)-10000D**	10000	10173	10100	1046	100
579-490-□1	**ST13◇1(A)-10200D**	10200	10373	10300	246	102
579-491-□1	**ST13◇1(A)-10400D**	10400	10573	10500	446	104
579-492-□1	**ST13◇1(A)-10600D**	10600	10773	10700	646	106
579-493-□1	**ST13◇1(A)-10800D**	10800	10973	10900	846	108
579-494-□1	**ST13◇1(A)-11000D**	11000	11173	11100	1046	110
579-495-□1	**ST13◇1(A)-11200D**	11200	11373	11300	246	112
579-496-□1	**ST13◇1(A)-11400D**	11400	11573	11500	446	114
579-497-□1	**ST13◇1(A)-11600D**	11600	11773	11700	646	116
579-498-□1	**ST13◇1(A)-11800D**	11800	11973	11900	846	118
579-499-□1	**ST13◇1(A)-12000D**	12000	12173	12100	1046	120

Dimensions

- **Resolution: 0.001 µm**

Order No.	Model	Effective range L0 (mm)	Overall length L2 (mm)	Scale length L3 (mm)	Scale holder A L4 (mm)	n
579-440-□2	**ST13◇2(A)-01100D**	1100	1273	1200	146	11
579-441-□2	**ST13◇2(A)-01200D**	1200	1373	1300	246	12
579-442-□2	**ST13◇2(A)-01300D**	1300	1473	1400	346	13
579-443-□2	**ST13◇2(A)-01400D**	1400	1573	1500	446	14
579-444-□2	**ST13◇2(A)-01500D**	1500	1673	1600	546	15
579-445-□2	**ST13◇2(A)-01600D**	1600	1773	1700	646	16
579-446-□2	**ST13◇2(A)-01700D**	1700	1873	1800	746	17
579-447-□2	**ST13◇2(A)-01800D**	1800	1973	1900	846	18
579-448-□2	**ST13◇2(A)-02000D**	2000	2173	2100	1046	20
579-449-□2	**ST13◇2(A)-02200D**	2200	2373	2300	246	22
579-450-□2	**ST13◇2(A)-02400D**	2400	2573	2500	446	24
579-451-□2	**ST13◇2(A)-02500D**	2500	2673	2600	546	25
579-452-□2	**ST13◇2(A)-02600D**	2600	2773	2700	646	26
579-453-□2	**ST13◇2(A)-02800D**	2800	2973	2900	846	28
579-454-□2	**ST13◇2(A)-03000D**	3000	3173	3100	1046	30
579-455-□2	**ST13◇2(A)-03200D**	3200	3373	3300	246	32
579-456-□2	**ST13◇2(A)-03400D**	3400	3573	3500	446	34
579-457-□2	**ST13◇2(A)-03600D**	3600	3773	3700	646	36
579-458-□2	**ST13◇2(A)-03800D**	3800	3973	3900	846	38
579-459-□2	**ST13◇2(A)-04000D**	4000	4173	4100	1046	40
579-460-□2	**ST13◇2(A)-04200D**	4200	4373	4300	246	42

The □ in the Order No. indicates the interface specification (0, 4, 5, 7, 8).
The ◇ code indicates the interface specification (0, 4, 5, 7, 8).
Effective range of ST1382A is up to 3600 mm.

External View

• Center mounting Effective range: 500 to 2200 mm

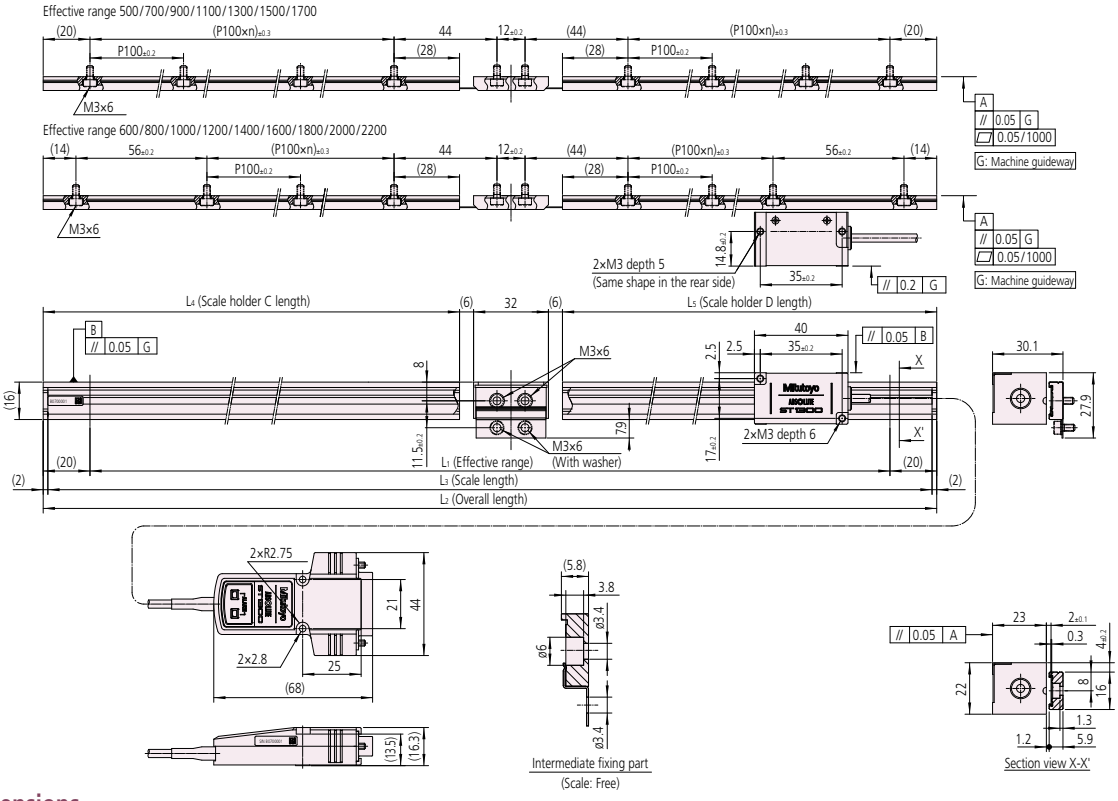

Dimensions

• Resolution: 0.01 µm

Order No.	Model	Effective range L1 (mm)	Overall length L2 (mm)	Scale length L3 (mm)	Scale holder C length L4 (mm)	Scale holder D length L5 (mm)	n1	n2	Total number (n) of scale holder mounting holes
579-434-□◇	**ST13□1(A)-500☆**	500	540	536	248	248	2	2	6
579-435-□◇	**ST13□1(A)-600☆**	600	640	636	298	298	2	2	8
579-436-□◇	**ST13□1(A)-700☆**	700	740	736	348	348	3	3	8
579-437-□◇	**ST13□1(A)-800☆**	800	840	836	398	398	3	3	10
579-438-□◇	**ST13□1(A)-900☆**	900	940	936	448	448	4	4	10
579-439-□◇	**ST13□1(A)-1000☆**	1000	1040	1036	498	498	4	4	12
579-440-□◇	**ST13□1(A)-1100☆**	1100	1140	1136	548	548	5	5	12
579-441-□◇	**ST13□1(A)-1200☆**	1200	1240	1236	598	598	5	5	14
579-442-□◇	**ST13□1(A)-1300☆**	1300	1340	1336	648	648	6	6	14
579-443-□◇	**ST13□1(A)-1400☆**	1400	1440	1436	698	698	6	6	16
579-444-□◇	**ST13□1(A)-1500☆**	1500	1540	1536	748	748	7	7	16
579-445-□◇	**ST13□1(A)-1600☆**	1600	1640	1636	798	798	7	7	18
579-446-□◇	**ST13□1(A)-1700☆**	1700	1740	1736	848	848	8	8	18
579-447-□◇	**ST13□1(A)-1800☆**	1800	1840	1836	898	898	8	8	20
579-448-□◇	**ST13□1(A)-2000☆**	2000	2040	2036	998	998	9	9	22
579-449-□◇	**ST13□1(A)-2200☆**	2200	2240	2236	1098	1098	10	10	24

Dimensions

• Resolution: 0.001 µm

Order No.	Model	Effective range L1 (mm)	Overall length L2 (mm)	Scale length L3 (mm)	Scale holder C length L4 (mm)	Scale holder D length L5 (mm)	n1	n2	Total number (n) of scale holder mounting holes
579-434-□◇	**ST13□2(A)-500☆**	500	540	536	248	248	2	2	6
579-435-□◇	**ST13□2(A)-600☆**	600	640	636	298	298	2	2	8
579-436-□◇	**ST13□2(A)-700☆**	700	740	736	348	348	3	3	8
579-437-□◇	**ST13□2(A)-800☆**	800	840	836	398	398	3	3	10
579-438-□◇	**ST13□2(A)-900☆**	900	940	936	448	448	4	4	10
579-439-□◇	**ST13□2(A)-1000☆**	1000	1040	1036	498	498	4	4	12
579-440-□◇	**ST13□2(A)-1100☆**	1100	1140	1136	548	548	5	5	12
579-441-□◇	**ST13□2(A)-1200☆**	1200	1240	1236	598	598	5	5	14
579-442-□◇	**ST13□2(A)-1300☆**	1300	1340	1336	648	648	6	6	14
579-443-□◇	**ST13□2(A)-1400☆**	1400	1440	1436	698	698	6	6	16
579-444-□◇	**ST13□2(A)-1500☆**	1500	1540	1536	748	748	7	7	16
579-445-□◇	**ST13□2(A)-1600☆**	1600	1640	1636	798	798	7	7	18
579-446-□◇	**ST13□2(A)-1700☆**	1700	1740	1736	848	848	8	8	18
579-447-□◇	**ST13□2(A)-1800☆**	1800	1840	1836	898	898	8	8	20
579-448-□◇	**ST13□2(A)-2000☆**	2000	2040	2036	998	998	9	9	22
579-449-□◇	**ST13□2(A)-2200☆**	2200	2240	2236	1098	1098	10	10	24

A numeral for symbol □ in each Order No. and Model No. indicates the following.
- 0: Supports Mitutoyo ENSIS high-speed serial interface
- 4: Supports Mitsubishi Electric Corporation, high-speed serial interface
- 5: Supports FANUC CORPORATION, high-speed serial interface
- 8: Supports Panasonic Corporation, high-speed serial interface

A numeral for symbol ◇ in each Order No. indicates the following.
- 3: 0.01 µm (Without system parameters)
- 4: 0.001 µm (Without system parameters)
- 5: 0.01 µm (With system parameters)
- 6: 0.001 µm (With system parameters)

A numeral for symbol ☆ in each Model No. indicates the following.
- F: Center mounting (Without system parameters)
- G: Center mounting (With system parameters)

External View

• Center mounting Effective range: 2400 to 4200 mm

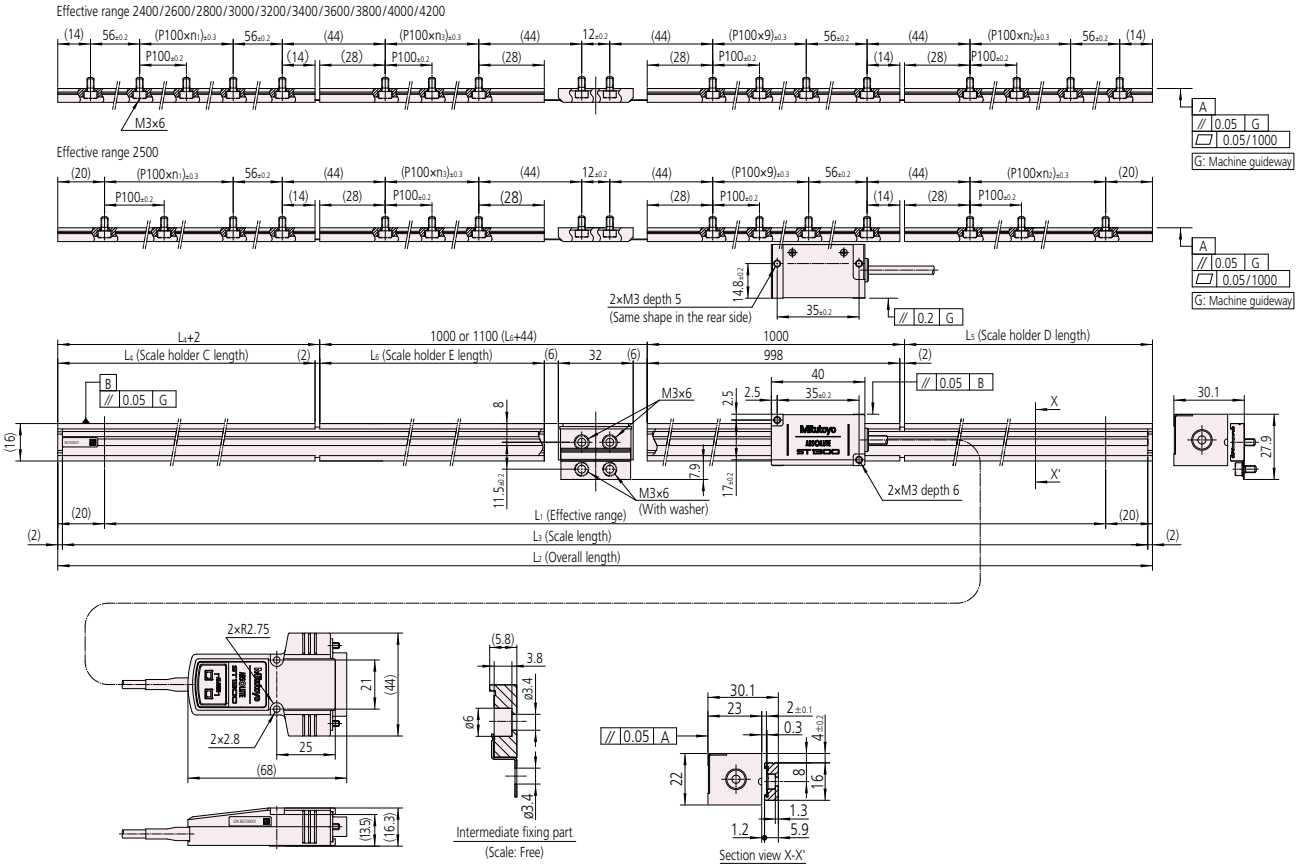

Dimensions

• Resolution: 0.01 µm

Order No.	Model	Effective range L_1 (mm)	Overall length L_2 (mm)	Scale length L_3 (mm)	Scale holder C length L_4 (mm)	Scale holder D length L_5 (mm)	Scale holder E length L_6 (mm)	n1	n2	n3	Total number (n) of scale holder mounting holes
579-450-□◇	**ST13□1(A)-2400☆**	2400	2440	2436	240	198	956	1	1	9	28
579-451-□◇	**ST13□1(A)-2500☆**	2500	2540	2536	290	248	956	2	2	9	28
579-452-□◇	**ST13□1(A)-2600☆**	2600	2640	2636	240	298	1056	1	2	10	30
579-453-□◇	**ST13□1(A)-2800☆**	2800	2840	2836	440	398	956	3	3	9	32
579-454-□◇	**ST13□1(A)-3000☆**	3000	3040	3036	440	498	1056	3	4	10	34
579-455-□◇	**ST13□1(A)-3200☆**	3200	3240	3236	640	598	956	5	5	9	36
579-456-□◇	**ST13□1(A)-3400☆**	3400	3440	3436	640	698	1056	5	6	10	38
579-457-□◇	**ST13□1(A)-3600☆**	3600	3640	3636	840	798	956	7	7	9	40
579-458-□◇	**ST13□1(A)-3800☆**	3800	3840	3836	840	898	1056	7	8	10	42
579-459-□◇	**ST13□1(A)-4000☆**	4000	4040	4036	1040	998	956	9	9	9	44
579-460-□◇	**ST13□1(A)-4200☆**	4200	4240	4236	1040	1098	1056	9	10	10	46

Dimensions

• Resolution: 0.001 µm

Order No.	Model	Effective range L_1 (mm)	Overall length L_2 (mm)	Scale length L_3 (mm)	Scale holder C length L_4 (mm)	Scale holder D length L_5 (mm)	Scale holder E length L_6 (mm)	n1	n2	n3	Total number (n) of scale holder mounting holes
579-450-□◇	**ST13□2(A)-2400☆**	2400	2440	2436	240	198	956	1	1	9	28
579-451-□◇	**ST13□2(A)-2500☆**	2500	2540	2536	290	248	956	2	2	9	28
579-452-□◇	**ST13□2(A)-2600☆**	2600	2640	2636	240	298	1056	1	2	10	30
579-453-□◇	**ST13□2(A)-2800☆**	2800	2840	2836	440	398	956	3	3	9	32
579-454-□◇	**ST13□2(A)-3000☆**	3000	3040	3036	440	498	1056	3	4	10	34
579-455-□◇	**ST13□2(A)-3200☆**	3200	3240	3236	640	598	956	5	5	9	36
579-456-□◇	**ST13□2(A)-3400☆**	3400	3440	3436	640	698	1056	5	6	10	38
579-457-□◇	**ST13□2(A)-3600☆**	3600	3640	3636	840	798	956	7	7	9	40
579-458-□◇	**ST13□2(A)-3800☆**	3800	3840	3836	840	898	1056	7	8	10	42
579-459-□◇	**ST13□2(A)-4000☆**	4000	4040	4036	1040	998	956	9	9	9	44
579-460-□◇	**ST13□2(A)-4200☆**	4200	4240	4236	1040	1098	1056	9	10	10	46

A numeral for symbol □ in each Order No. and Model No. indicates the following.
- 0: Supports Mitutoyo ENSIS high-speed serial interface
- 4: Supports Mitsubishi Electric Corporation, high-speed serial interface
- 5: Supports FANUC CORPORATION, high-speed serial interface
- 8: Supports Panasonic Corporation, high-speed serial interface

A numeral for symbol ◇ in each Order No. indicates the following.
- 3: 0.01 µm (Without system parameters)
- 4: 0.001 µm (Without system parameters)
- 5: 0.01 µm (With system parameters)
- 6: 0.001 µm (With system parameters)

A numeral for symbol ☆ in each Model No. indicates the following.
- F: Center mounting (Without system parameters)
- G: Center mounting (With system parameters)

Effective range of ST1382A is up to 3600 mm.

External View

- **Center mounting Effective range 4400 to 6000 mm**

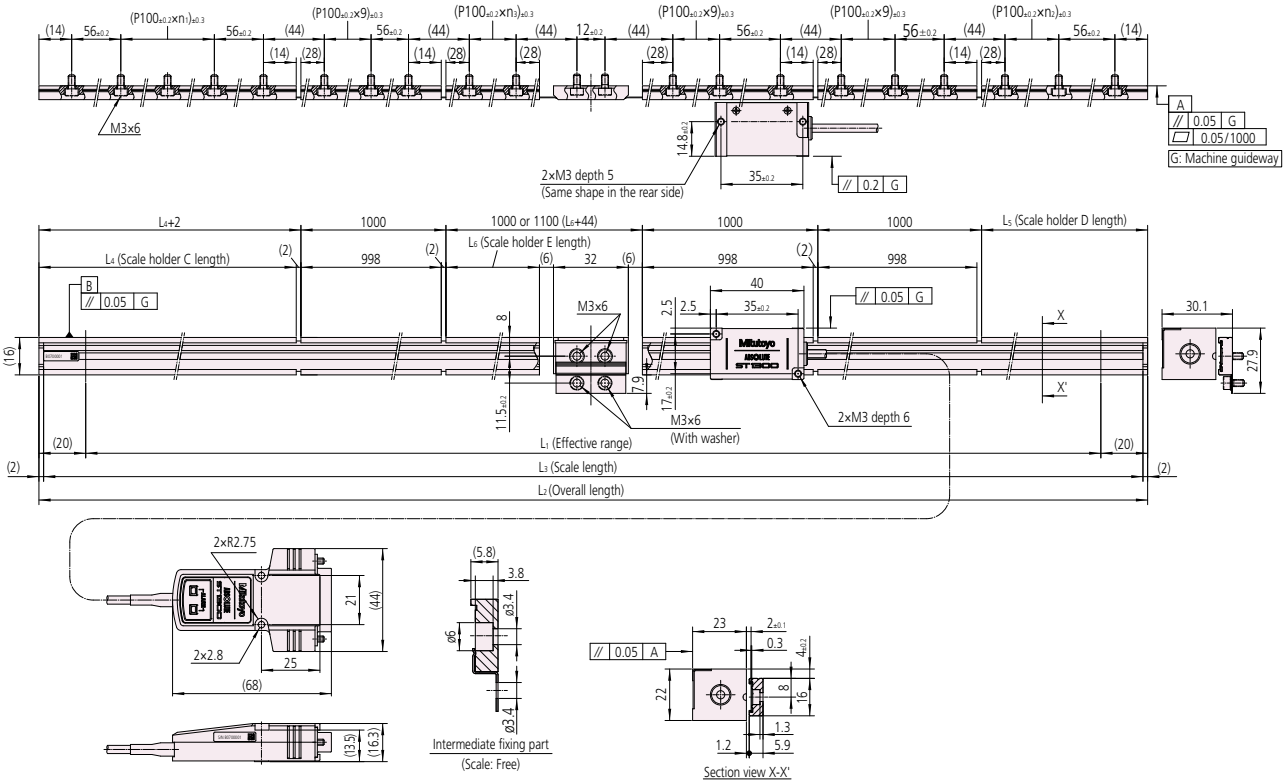

Dimensions

- **Resolution: 0.01 µm**

Order No.	Model	Effective range L_1 (mm)	Overall length L_2 (mm)	Scale length L_3 (mm)	Scale holder C length L_4 (mm)	Scale holder D length L_5 (mm)	Scale holder E length L_6 (mm)	n1	n2	n3	Total number (n) of scale holder mounting holes
579-461-□◇	**ST13□1(A)-4400☆**	4400	4440	4436	240	198	956	1	1	9	50
579-462-□◇	**ST13□1(A)-4600☆**	4600	4640	4636	240	298	1056	1	2	10	52
579-463-□◇	**ST13□1(A)-4800☆**	4800	4840	4836	440	398	956	3	3	9	54
579-464-□◇	**ST13□1(A)-5000☆**	5000	5040	5036	440	498	1056	3	4	10	56
579-465-□◇	**ST13□1(A)-5200☆**	5200	5240	5236	640	598	956	5	5	9	58
579-466-□◇	**ST13□1(A)-5400☆**	5400	5440	5436	640	698	1056	5	6	10	60
579-467-□◇	**ST13□1(A)-5600☆**	5600	5640	5636	840	798	956	7	7	9	62
579-468-□◇	**ST13□1(A)-5800☆**	5800	5840	5836	840	898	1056	7	8	10	64
579-469-□◇	**ST13□1(A)-6000☆**	6000	6040	6036	1040	998	956	9	9	9	66

A numeral for symbol □ in each Order No. and Model No. indicates the following.
0: Supports Mitutoyo ENSIS high-speed serial interface
4: Supports Mitsubishi Electric Corporation, high-speed serial interface
5: Supports FANUC CORPORATION, high-speed serial interface
8: Supports Panasonic Corporation, high-speed serial interface

A numeral for symbol ◇ in each Order No. indicates the following.
3: 0.01 µm (Without system parameters)
4: 0.001 µm (Without system parameters)
5: 0.01 µm (With system parameters)
6: 0.001 µm (With system parameters)

A numeral for symbol ☆ in each Model No. indicates the following.
F: Center mounting (Without system parameters)
G: Center mounting (With system parameters)

External View

- **Double-sided tape mounting type (Effective range: 10 to 3000 mm)**

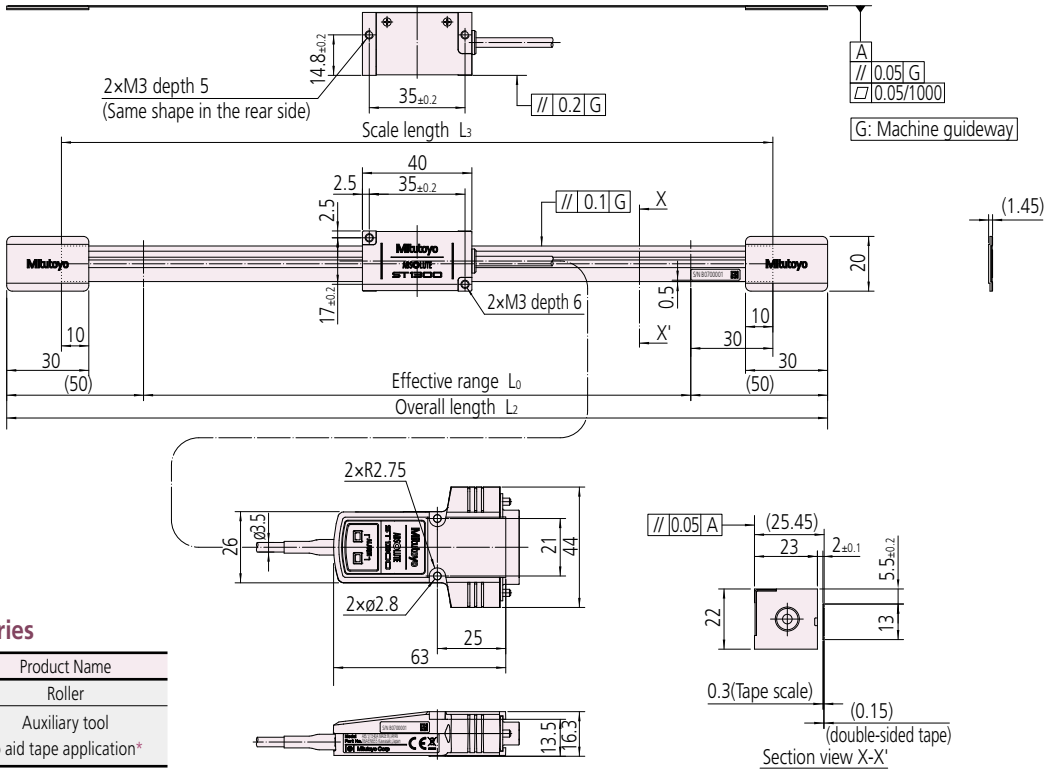

Optional accessories

Order No.	Product Name
06AEJ505	Roller
06AEQ305	Auxiliary tool to aid tape application*

* Effective range 200 to 3000 mm

Note: For details about the mounting method, refer to the User's Manual.

Dimensions

- **Resolution: 0.01 µm**

Order No.	Model	Effective range L_0 (mm)	Overall length L_2 (mm)	Scale length L_3 (mm)
579-401-□1	**ST13◇1(A)-00010E**	10	110	70
579-402-□1	**ST13◇1(A)-00025E**	25	125	85
579-403-□1	**ST13◇1(A)-00050E**	50	150	110
579-404-□1	**ST13◇1(A)-00075E**	75	175	135
579-405-□1	**ST13◇1(A)-00100E**	100	200	160
579-406-□1	**ST13◇1(A)-00150E**	150	250	210
579-407-□1	**ST13◇1(A)-00200E**	200	300	260
579-408-□1	**ST13◇1(A)-00250E**	250	350	310
579-409-□1	**ST13◇1(A)-00300E**	300	400	360
579-410-□1	**ST13◇1(A)-00350E**	350	450	410
579-411-□1	**ST13◇1(A)-00400E**	400	500	460
579-412-□1	**ST13◇1(A)-00450E**	450	550	510
579-413-□1	**ST13◇1(A)-00500E**	500	600	560
579-414-□1	**ST13◇1(A)-00600E**	600	700	660
579-415-□1	**ST13◇1(A)-00700E**	700	800	760
579-416-□1	**ST13◇1(A)-00800E**	800	900	860
579-417-□1	**ST13◇1(A)-00900E**	900	1000	960
579-418-□1	**ST13◇1(A)-01000E**	1000	1100	1060
579-419-□1	**ST13◇1(A)-01100E**	1100	1200	1160
579-420-□1	**ST13◇1(A)-01200E**	1200	1300	1260
579-421-□1	**ST13◇1(A)-01300E**	1300	1400	1360
579-422-□1	**ST13◇1(A)-01400E**	1400	1500	1460
579-423-□1	**ST13◇1(A)-01500E**	1500	1600	1560
579-424-□1	**ST13◇1(A)-01600E**	1600	1700	1660
579-425-□1	**ST13◇1(A)-01700E**	1700	1800	1760
579-426-□1	**ST13◇1(A)-01800E**	1800	1900	1860
579-427-□1	**ST13◇1(A)-02000E**	2000	2200	2060
579-428-□1	**ST13◇1(A)-02200E**	2200	2400	2260
579-429-□1	**ST13◇1(A)-02400E**	2400	2500	2460
579-430-□1	**ST13◇1(A)-02500E**	2500	2600	2560
579-431-□1	**ST13◇1(A)-02600E**	2600	2800	2660
579-432-□1	**ST13◇1(A)-02800E**	2800	3000	2860
579-433-□1	**ST13◇1(A)-03000E**	3000	3100	3060

Dimensions

- **Resolution: 0.001 µm**

Order No.	Model	Effective range L_0 (mm)	Overall length L_2 (mm)	Scale length L_3 (mm)
579-401-□2	**ST13◇2(A)-00010E**	10	110	70
579-402-□2	**ST13◇2(A)-00025E**	25	125	85
579-403-□2	**ST13◇2(A)-00050E**	50	150	110
579-404-□2	**ST13◇2(A)-00075E**	75	175	135
579-405-□2	**ST13◇2(A)-00100E**	100	200	160
579-406-□2	**ST13◇2(A)-00150E**	150	250	210
579-407-□2	**ST13◇2(A)-00200E**	200	300	260
579-408-□2	**ST13◇2(A)-00250E**	250	350	310
579-409-□2	**ST13◇2(A)-00300E**	300	400	360
579-410-□2	**ST13◇2(A)-00350E**	350	450	410
579-411-□2	**ST13◇2(A)-00400E**	400	500	460
579-412-□2	**ST13◇2(A)-00450E**	450	550	510
579-413-□2	**ST13◇2(A)-00500E**	500	600	560
579-414-□2	**ST13◇2(A)-00600E**	600	700	660
579-415-□2	**ST13◇2(A)-00700E**	700	800	760
579-416-□2	**ST13◇2(A)-00800E**	800	900	860
579-417-□2	**ST13◇2(A)-00900E**	900	1000	960
579-418-□2	**ST13◇2(A)-01000E**	1000	1100	1060
579-419-□2	**ST13◇2(A)-01100E**	1100	1200	1160
579-420-□2	**ST13◇2(A)-01200E**	1200	1300	1260
579-421-□2	**ST13◇2(A)-01300E**	1300	1400	1360
579-422-□2	**ST13◇2(A)-01400E**	1400	1500	1460
579-423-□2	**ST13◇2(A)-01500E**	1500	1600	1560
579-424-□2	**ST13◇2(A)-01600E**	1600	1700	1660
579-425-□2	**ST13◇2(A)-01700E**	1700	1800	1760
579-426-□2	**ST13◇2(A)-01800E**	1800	1900	1860
579-427-□2	**ST13◇2(A)-02000E**	2000	2100	2060
579-428-□2	**ST13◇2(A)-02200E**	2200	2400	2260
579-429-□2	**ST13◇2(A)-02400E**	2400	2500	2460
579-430-□2	**ST13◇2(A)-02500E**	2500	2600	2560
579-431-□2	**ST13◇2(A)-02600E**	2600	2800	2660
579-432-□2	**ST13◇2(A)-02800E**	2800	3000	2860
579-433-□2	**ST13◇2(A)-03000E**	3000	3100	3060

The □ in the Order No. indicates the interface specification (0, 4, 5, 7, 8).
The ◇ code indicates the interface specification (0, 4, 5, 7, 8).

ABS ST1300 Signal Check Program

- When the **ABS ST1300** signal check program has been installed in a PC, the program allows signal check and maintenance work of the scale by connecting the conversion unit and the PC to the **ABS ST1300** Series. (The signal check work is indispensable. For details, refer to the User's Manual.)

- **Description of signal check program**

Item	Description	Screen photo
(1) Confirmation of the detector head mounting position	Allows checking and judgment of the mounting status by acquiring data from the tape scale.	
(2) Confirmation of the overall length of the tape scale	Allows checking and judgment of the mounting status by acquiring data on the overall length of the tape scale.	
(3) Scale origin setting	Allows the scale origin (positional data: 0) to be set at an arbitrary point on the scale.	
(4) Confirmation of the absolute position data	Allows verification of the current position data with reference to the scale origin, and the alarm code and alarm information is output attached to the position data.	
(5) Error history clear	Allows records of error detection in the scale to be cleared.	
(6) Writing system parameters	Allows system parameters to be written to the detector head.	
(7) Reading system parameters	Allows system parameters stored in the detector head to be read out and displayed.	
(8) Reading the error history and store it to PC	Allows readout of a detailed internal error code, verification of error code information and saving error codes as an error record file in the PC.	
(9) Signal monitor	Allows a check of the acquired data over the overall length of the tape scale.	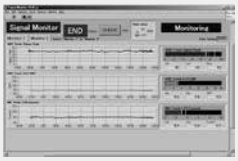

• Required items

Item	Quantity	Details	Notes
PC*	1	DOS/V (Windows version)	Provided by user
Conversion unit	1	USB-485 (422) DS15P (System Sacom Industry Corp.)	Optional (bundle)
Connection cable A	1	USB cable	
Connection cable B	1	RS-485 cable or RS-422 cable	
Application software	1	ABS ST1300 Signal Check Program	

* This program requires a PC with the following operating environment.

CPU	: 1 GHz or faster
Memory	: 1 GB min.
Program size	: 10 MB
OS	: Windows 7 or later
Monitor	: 1024×768 or higher is recommended

• "Conversion unit, application software" set

Order No.	Applicable model	Conversion unit	Connecting cable B
06AFA406	ST1301A ST1302A	USB-485 DS15P	MIT cable
06AEX139	ST1341A ST1342A	USB-485 DS15P	MEL cable
06AFA407	ST1351 ST1352	USB-422 DS15P	FANUC cable
06AEX140	ST1371A, ST1372A ST1381A, ST1382A	USB-485 DS15P	Y/MAT cable

Note: An Order No. is applicable to each company's interface because connecting cable B differs depending on the interface of the **ABS ST1300** Series.

• Connection details

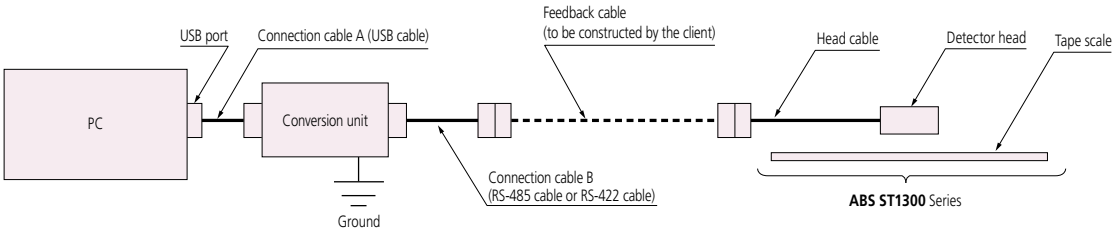

Note 1: To prevent the possibility of electric shock the device must be grounded.
Note 2: When using Order No. 06AFA406, connect the head cable and the connection cable B together.
Note 3: The conversion unit's power source is supplied via connection cable A from the PC USB port.

DRIVE-CLiQ

ABS AT1100 Series

(Resolution 0.05 µm Specification)

ABSOLUTE™

Introduction video available here.

Features

- This series has adopted a new structure not easily subject to infiltration of coolant and a dust-proof rubber highly resistant to coolant attack. It offers a field support type linear scale with higher reliability than before.
- The sensor-to-scale air gap in this series of electromagnetic induction scales is approximately 0.4 mm – around 4 times as wide as that of a conventional optical or electromagnetic sensor. The increased air gap reduces the likelihood of failure due to the accumulation of contaminants and is one of the world's largest to be found in a machine tool scale.
- The de facto standard frame multipoint mounting method has been adopted to provide high resistance to vibration and shock.
- The improvement of signal processing technology in the electromagnetic induction type absolute linear encoder has achieved approximately 6 times higher accuracy than that of previous scales.
- This series is compatible with the high-speed serial interface from leading machine-tool companies, allowing direct connection to an NC controller.

Meaning of Model No.

ABS AT11□3□ - □□□□

Effective range

Interface specifications

Applicable system	Scale model
FANUC Ltd., Serial αi interface	**ABS AT1153**
Mitsubishi Electric Corporation MDS-D/MDS-DH Series	**ABS AT1143**
Siemens AG DRIVE-CLiQ	**ABS AT1123**
Mitutoyo ENSIS	**ABS AT1103A**

Note 1: For the details of applicable systems, inquiries should be made of each manufacturer.
Note 2: **ABS AT11□3□**

Transmission method
Nothing: Full duplex communication
A: Half-duplex communication

Scale configuration

[**ABS AT1100** Series]

ABS AT1153
ABS AT1143
ABS AT1103A

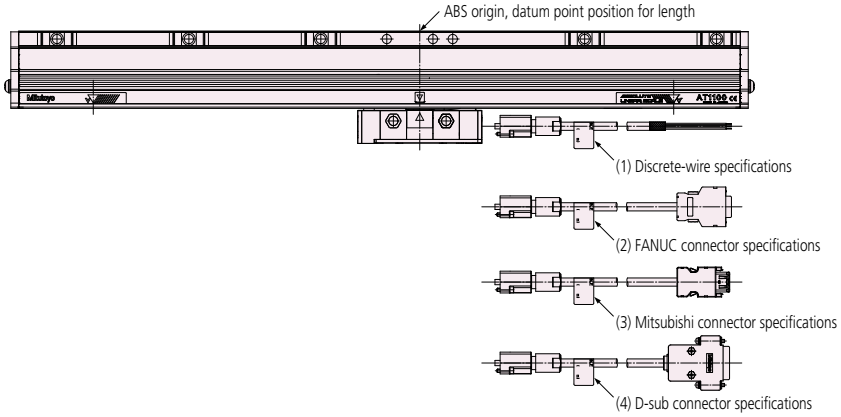

ABS AT1123

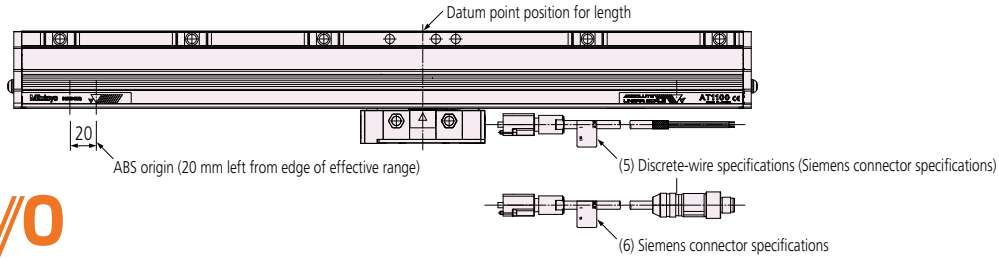

Mitutoyo

Specifications

Items / Model	ABS AT11□3(A)
Detection method	Electromagnetic induction
Mounting method	Frame multipoint
Reference position for expansion due to temperature variation	Refer to the External View diagram (L5)
Effective range	24 types: 140, 240, 340, 440, 540, 640, 740, 840, 940, 1040, 1140, 1240, 1340, 1440, 1540, 1640, 1740, 1840, 2040, 2240, 2440, 2640, 2840, 3040 mm
Resolution	0.05 µm
Maximum response speed	3000 mm/s
Indication accuracy (20 °C)	Effective range L_0=140 - 2040 mm: 3 + 5L_0/1000 (µm) Effective range L_0=2240 - 3040 mm: 5 + 5L_0/1000 (µm)
Expansion coefficient	≈8×10^{-6}/K
Vibration resistance	≤196 m/s^2 (55 - 2000 Hz)
Shock resistance	Effective range L_0=140 - 2040 mm: ≤343 m/s^2 Effective range L_0=2240 - 3040 mm: ≤294 m/s^2 (1/2 sin 11 ms)
Power supply voltage	**ABS AT1153/1143/AT1103A**: 5 VDC ±10% **ABS AT1123**: 24 VDC (Conforming to DRIVE-CLiQ)
Maximum current consumption	**AT1153**: 300 mA (Max.) **AT1143**: 290 mA (Max.) **AT1123**: 140 mA (Max.) **AT1103A**: 300 mA (Max.)
Operational temperature/humidity ranges	0 to 50 °C 20 - 80%RH (non-condensing)
Storage temperature/humidity ranges	-20 to 70 °C 20 - 80%RH (non-condensing)

System Configuration (Example)

[Connection example 1] [ABS AT1153/AT1143/AT1103A]

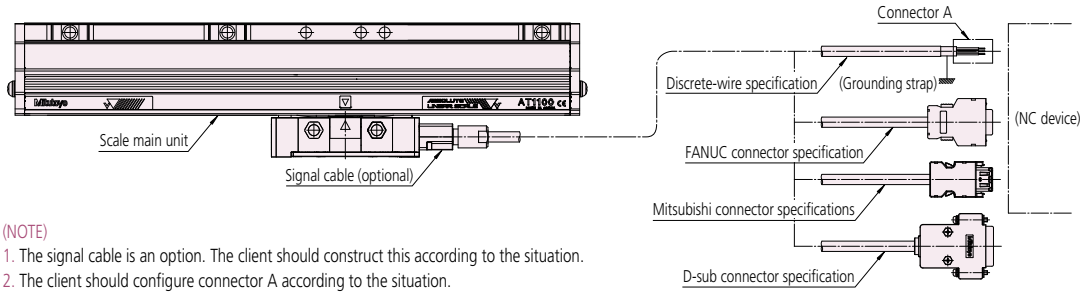

(NOTE)
1. The signal cable is an option. The client should construct this according to the situation.
2. The client should configure connector A according to the situation.
3. Installation of connector A and the grounding strap is the responsibility of the client.
4. Each cable length in the above system configuration must be up to 12 m. If any cable length exceeds 12 m, use the cable configuration as shown in [**Connection example 2**].

[ABS AT1123]

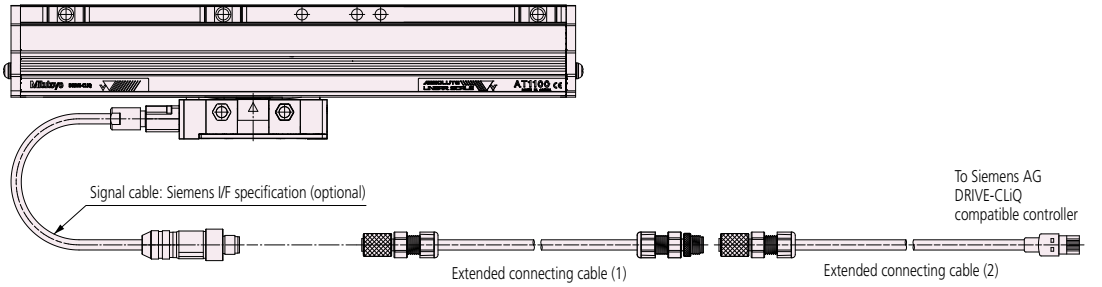

The extended connecting cables (1) and (2) should be constructed by the client.

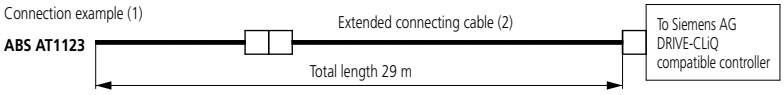

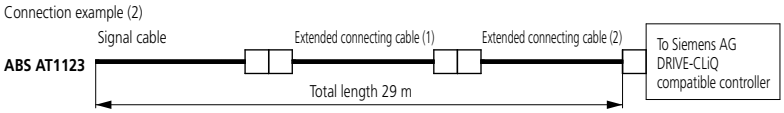

Extended connecting cable (1) SIEMENS AG Model No. 6FX8002-2DC34 - □ □ □ □
Extended connecting cable (2) SIEMENS AG Model No. 6FX8002-2DC30 - □ □ □ □

(NOTE)
1. The extended connecting cables should be constructed by the client.
2. Keep the total length of signal cable and extended connecting cable(s) less than 29 m.
3. For the signal cable specification and how to obtain, contact Siemens AG.

Output specifications

• ABS AT1153 / 1143 / AT1103A (discrete-wire)

Wire color	Signal
Brown	SD
Red	*SD
Orange	RQ (REQ)
Yellow	*RQ (REQ)
White (2P)	+5 V
Black (2P)	GND
Shield wire	F.G

* Cable to be constructed by the client (A total of 29 m with the signal cable).

• ABS AT1143
Mitsubishi connector specifications **(MDR)**

Pin No.	Signal
1	5 V
2	GND
3	RQDT
4	$\overline{\text{RQDT}}$
7	DT
8	$\overline{\text{DT}}$
5, 6, 9, 10	Not used
Connector shell	F.G

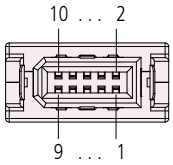

• ABS AT1153
FANUC connector specifications **(FI-20)**

Pin No.	Signal
1	SD
2	*SD
5	RQ(REQ)
6	*RQ(REQ)
12, 14	GND
18, 20	+5 V
16	F.G
3, 4, 7 - 11, 13, 15, 17, 19	Not used

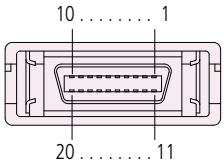

• ABS AT1103A
Mitutoyo connector specifications **(D-sub 15-pin)**

Pin No.	Signal
1, 2	GND
3, 4	+5 V
5	DT
6	$\overline{\text{DT}}$
7	RQDT
8	$\overline{\text{RQDT}}$
9 - 14	Not used
15 Connector shell	F.G

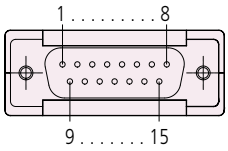

• ABS AT1123 (discrete-wire)
Siemens connector specifications

Wire color	Signal
White / Brown	+24 V
Brown	GND
White / Blue	TEST
Blue	$\overline{\text{TEST}}$
White / Orange	TXP
Orange	TXN
White / Green	RXP
Green	RXN
Shield	F.G

Note: Leave test terminals (TEST, $\overline{\text{TEST}}$) disconnected during use.

• ABS AT1123
M12 connector specifications

Pin No.	Signal
1	+24 V
2	TEST
3	RXP
4	RXN
5	GND
6	TXN
7	TXP
8	$\overline{\text{TEST}}$
Shield sleeve	F.G

Note: Leave test terminals (TEST, $\overline{\text{TEST}}$) disconnected during use.

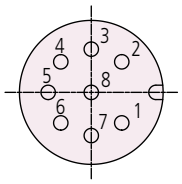

Cable Dimensions FANUC connector specifications (AT1153 Series)

Unit: mm

• Discrete-wire specification

Detector head (custom) side: Water-proof type

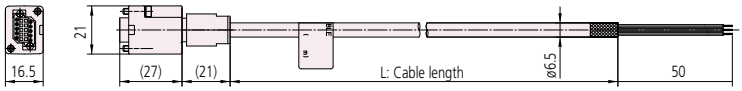

PVC sheath

Order No.	Model	Cable length (m)
06AFG596-1	AT1100F/M discrete-wire cable 1 m	1
06AFG596-3	AT1100F/M discrete-wire cable 3 m	3
06AFG596-6	AT1100F/M discrete-wire cable 6 m	6
06AFG596-9	AT1100F/M discrete-wire cable 9 m	9
06AFG596-12	AT1100F/M discrete-wire cable 12 m	12

PUR sheath

Order No.	Model	Cable length (m)
06AFX744-1	AT1100PUR discrete-wire cable 1 m	1
06AFX744-3	AT1100PUR discrete-wire cable 3 m	3
06AFX744-6	AT1100PUR discrete-wire cable 6 m	6
06AFX744-9	AT1100PUR discrete-wire cable 9 m	9
06AFX744-12	AT1100PUR discrete-wire cable 12 m	12

• FANUC connector specifications

Detector head (custom) side: Water-proof type

NC (FI-20) side: Non-waterproof

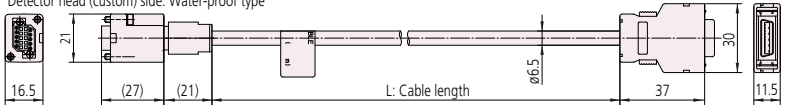

PVC sheath

Order No.	Model	Cable length (m)
06AFF921-1	AT1100F Cable FUNUC 1 m	1
06AFF921-3	AT1100F Cable FUNUC 3 m	3
06AFF921-6	AT1100F Cable FUNUC 6 m	6
06AFF921-9	AT1100F Cable FUNUC 9 m	9
06AFF921-12	AT1100F Cable FUNUC 12 m	12

PUR sheath

Order No.	Model	Cable length (m)
06AGB149-1	AT1150PUR Cable F 1 m	1
06AGB149-3	AT1150PUR Cable F 3 m	3
06AGB149-6	AT1150PUR Cable F 6 m	6
06AGB149-9	AT1150PUR Cable F 9 m	9
06AGB149-12	AT1150PUR Cable F 12 m	12

• FANUC connector specifications Conduit

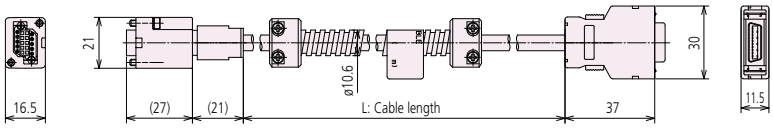

PVC sheath

Order No.	Model	Cable length (m)
06AFX739-1	AT1100F C Cable F 1 m	1
06AFX739-3	AT1100F C Cable F 3 m	3
06AFX739-6	AT1100F C Cable F 6 m	6
06AFX739-9	AT1100F C Cable F 9 m	9
06AFX739-12	AT1100F C Cable F 12 m	12

• D-sub 15-pin connector

Detector head (custom) side: Water-proof type

NC (Dsub 15) side: Non-waterproof

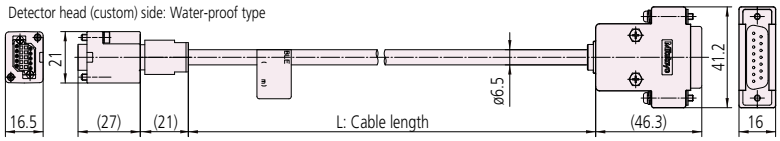

PVC sheath

Order No.	Model	Cable length (m)
06AFY915-1	AT1100E Cable D15 1 m	1
06AFY915-3	AT1100E Cable D15 3 m	3
06AFY915-6	AT1100E Cable D15 6 m	6
06AFY915-9	AT1100E Cable D15 9 m	9
06AFY915-12	AT1100E Cable D15 12 m	12

PUR sheath

Order No.	Model	Cable length (m)
06AFX743-1	AT1100PUR C Cable D15 1 m	1
06AFX743-3	AT1100PUR C Cable D15 3 m	3
06AFX743-6	AT1100PUR C Cable D15 6 m	6
06AFX743-9	AT1100PUR C Cable D15 9 m	9
06AFX743-12	AT1100PUR C Cable D15 12 m	12

• D-sub 15-pin connector Conduit

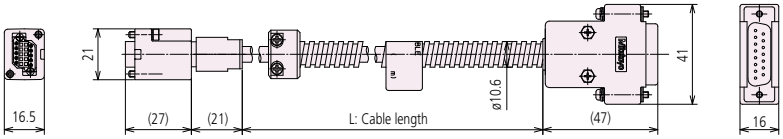

PVC sheath

Order No.	Model	Cable length (m)
06AFY916-1	AT1100E C Cable D15 1 m	1
06AFY916-3	AT1100E C Cable D15 3 m	3
06AFY916-6	AT1100E C Cable D15 6 m	6
06AFY916-9	AT1100E C Cable D15 9 m	9
06AFY916-12	AT1100E C Cable D15 12 m	12

Cable Dimensions Mitsubishi connector specifications (AT1143 Series)

• Discrete-wire specification

Detector head (custom) side: Water-proof type

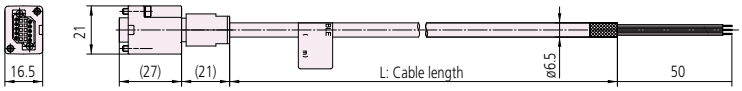

PVC sheath

Order No.	Model	Cable length (m)
06AFG596-1	AT1100F/M discrete-wire cable 1 m	1
06AFG596-3	AT1100F/M discrete-wire cable 3 m	3
06AFG596-6	AT1100F/M discrete-wire cable 6 m	6
06AFG596-9	AT1100F/M discrete-wire cable 9 m	9
06AFG596-12	AT1100F/M discrete-wire cable 12 m	12

PUR sheath

Order No.	Model	Cable length (m)
06AFX744-1	AT1100PUR discrete-wire cable 1 m	1
06AFX744-3	AT1100PUR discrete-wire cable 3 m	3
06AFX744-6	AT1100PUR discrete-wire cable 6 m	6
06AFX744-9	AT1100PUR discrete-wire cable 9 m	9
06AFX744-12	AT1100PUR discrete-wire cable 12 m	12

• Mitsubishi connector specifications

Detector head (custom) side: Water-proof type

NC (MDR) side: Non-waterproof

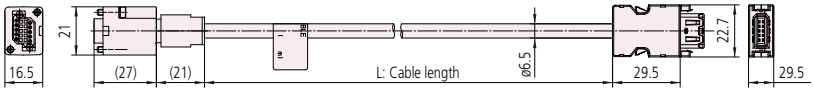

PVC sheath

Order No.	Model	Cable length (m)
06AFF957-1	AT1100M Cable MDS-D 1 m	1
06AFF957-3	AT1100M Cable MDS-D 3 m	3
06AFF957-6	AT1100M Cable MDS-D 6 m	6
06AFF957-9	AT1100M Cable MDS-D 9 m	9
06AFF957-12	AT1100M Cable MDS-D 12 m	12

PUR sheath

Order No.	Model	Cable length (m)
06AFX746-1	AT1140PUR Cable M 1 m	1
06AFX746-3	AT1140PUR Cable M 3 m	3
06AFX746-6	AT1140PUR Cable M 6 m	6
06AFX746-9	AT1140PUR Cable M 9 m	9
06AFX746-12	AT1140PUR Cable M 12 m	12

• Mitsubishi connector specifications Conduit

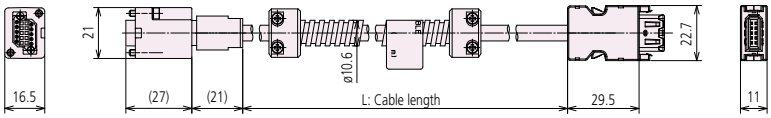

PVC sheath

Order No.	Model	Cable length (m)
06AFX740-1	AT1100M C Cable M 1 m	1
06AFX740-3	AT1100M C Cable M 3 m	3
06AFX740-6	AT1100M C Cable M 6 m	6
06AFX740-9	AT1100M C Cable M 9 m	9
06AFX740-12	AT1100M C Cable M 12 m	12

• D-sub 15-pin connector

Detector head (custom) side: Water-proof type

NC (Dsub 15) side: Non-waterproof

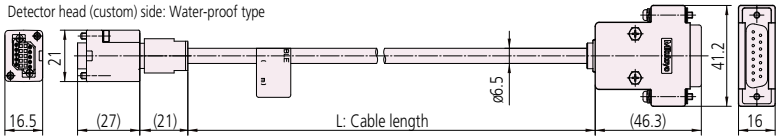

PVC sheath

Order No.	Model	Cable length (m)
06AFY915-1	AT1100E Cable D15 1 m	1
06AFY915-3	AT1100E Cable D15 3 m	3
06AFY915-6	AT1100E Cable D15 6 m	6
06AFY915-9	AT1100E Cable D15 9 m	9
06AFY915-12	AT1100E Cable D15 12 m	12

PUR sheath

Order No.	Model	Cable length (m)
06AFX743-1	AT1100PUR Cable D15 1 m	1
06AFX743-3	AT1100PUR Cable D15 3 m	3
06AFX743-6	AT1100PUR Cable D15 6 m	6
06AFX743-9	AT1100PUR Cable D15 9 m	9
06AFX743-12	AT1100PUR Cable D15 12 m	12

• D-sub 15-pin connector Conduit

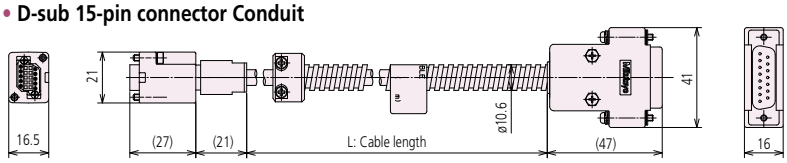

PVC sheath

Order No.	Model	Cable length (m)
06AFY916-1	AT1100E C Cable D15 1m	1
06AFY916-3	AT1100E C Cable D15 3 m	3
06AFY916-6	AT1100E C Cable D15 6 m	6
06AFY916-9	AT1100E C Cable D15 9 m	9
06AFY916-12	AT1100E C Cable D15 12 m	12

Cable Dimensions Siemens connector specifications (AT1123 Series)

• Discrete-wire specification

Detector head (custom) side: Water-proof type

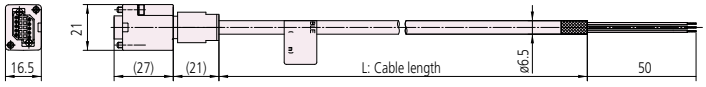

PVC sheath

Order No.	Model	Cable length (m)
06AFM103-1	AT1100S discrete-wire cable 1 m	1
06AFM103-3	AT1100S discrete-wire cable 3 m	3
06AFM103-6	AT1100S discrete-wire cable 6 m	6
06AFM103-9	AT1100S discrete-wire cable 9 m	9
06AFM103-12	AT1100S discrete-wire cable 12 m	12

PUR sheath

Order No.	Model	Cable length (m)
06AFX747-1	AT1120PUR discrete-wire cable 1 m	1
06AFX747-3	AT1120PUR discrete-wire cable 3 m	3
06AFX747-6	AT1120PUR discrete-wire cable 6 m	6
06AFX747-9	AT1120PUR discrete-wire cable 9 m	9
06AFX747-12	AT1120PUR discrete-wire cable 12 m	12

• M12 connector

Detector head (custom) side: Water-proof type

NC (M12) side: Water-proof type

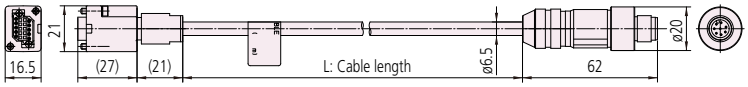

PVC sheath

Order No.	Model	Cable length (m)
06AFL121-1	AT1100S Cable M12 1 m	1
06AFL121-3	AT1100S Cable M12 3 m	3
06AFL121-6	AT1100S Cable M12 6 m	6
06AFL121-9	AT1100S Cable M12 9 m	9
06AFL121-12	AT1100S Cable M12 12 m	12

PUR sheath

Order No.	Model	Cable length (m)
06AFX748-1	AT1120PUR Cable M12 1 m	1
06AFX748-3	AT1120PUR Cable M12 3 m	3
06AFX748-6	AT1120PUR Cable M12 6 m	6
06AFX748-9	AT1120PUR Cable M12 9 m	9
06AFX748-12	AT1120PUR Cable M12 12 m	12

• M12 connector Conduit

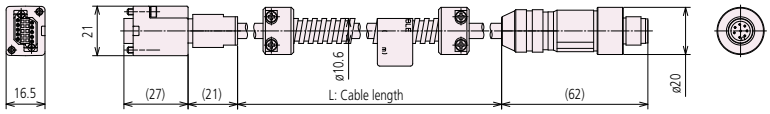

PVC sheath

Order No.	Model	Cable length (m)
06AFX741-1	AT1100S C Cable M12 1 m	1
06AFX741-3	AT1100S C Cable M12 3 m	3
06AFX741-6	AT1100S C Cable M12 6 m	6
06AFX741-9	AT1100S C Cable M12 9 m	9
06AFX741-12	AT1100S C Cable M12 12 m	12

Cable Dimensions ENSIS connector specifications (AT1103 Series)

• Discrete-wire specification

Detector head (custom) side: Water-proof type

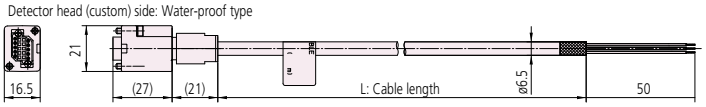

PVC sheath

Order No.	Model	Cable length (m)
06AFG596-1	AT1100F/M discrete-wire cable 1 m	1
06AFG596-3	AT1100F/M discrete-wire cable 3 m	3
06AFG596-6	AT1100F/M discrete-wire cable 6 m	6
06AFG596-9	AT1100F/M discrete-wire cable 9 m	9
06AFG596-12	AT1100F/M discrete-wire cable 12 m	12

PUR sheath

Order No.	Model	Cable length (m)
06AFX744-1	AT1100PUR discrete-wire cable 1 m	1
06AFX744-3	AT1100PUR discrete-wire cable 3 m	3
06AFX744-6	AT1100PUR discrete-wire cable 6 m	6
06AFX744-9	AT1100PUR discrete-wire cable 9 m	9
06AFX744-12	AT1100PUR discrete-wire cable 12 m	12

• D-sub 15-pin connector

NC (Dsub 15) side: Non-waterproof

Detector head (custom) side: Water-proof type

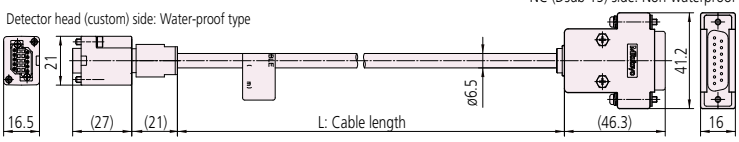

PVC sheath

Order No.	Model	Cable length (m)
06AFY915-1	AT1100E Cable D15 1 m	1
06AFY915-3	AT1100E Cable D15 3 m	3
06AFY915-6	AT1100E Cable D15 6 m	6
06AFY915-9	AT1100E Cable D15 9 m	9
06AFY915-12	AT1100E Cable D15 12 m	12

PUR sheath

Order No.	Model	Cable length (m)
06AFX743-1	AT1100PUR Cable D15 1 m	1
06AFX743-3	AT1100PUR Cable D15 3 m	3
06AFX743-6	AT1100PUR Cable D15 6 m	6
06AFX743-9	AT1100PUR Cable D15 9 m	9
06AFX743-12	AT1100PUR Cable D15 12 m	12

• D-sub 15-pin connector Conduit

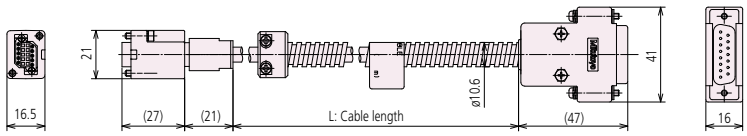

PVC sheath

Order No.	Model	Cable length (m)
06AFY916-1	AT1100E C Cable D15 1 m	1
06AFY916-3	AT1100E C Cable D15 3 m	3
06AFY916-6	AT1100E C Cable D15 6 m	6
06AFY916-9	AT1100E C Cable D15 9 m	9
06AFY916-12	AT1100E C Cable D15 12 m	12

External View

Unit: mm

• **ABS AT1153/AT1143/AT1103A**

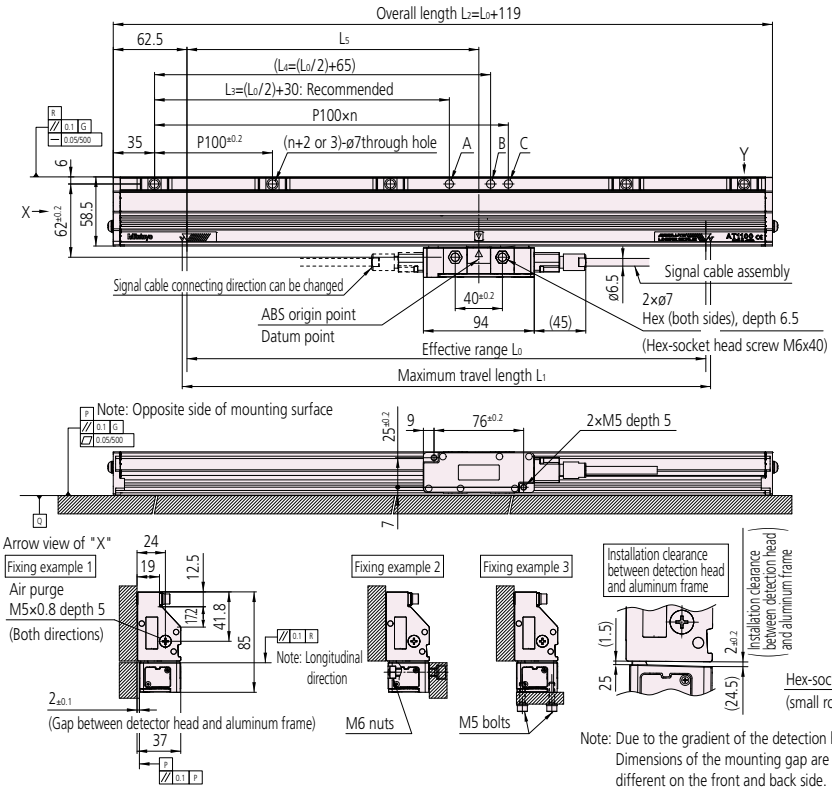

Note:
1. G represents the machine guide.
2. P represents the opposite side of the aluminum frame mounting surface. Also, S represents the opposite side of the detector head mounting surface.
3. Q and R represent the linear scale's reference surfaces for mounting.
4. For descriptions of L_0 to L_5 in the figure, refer to the table below.
5. Check the mounting dimensions using the head clamping tool.
6. For the center ø7, it is recommended that it be fastened at two points, A and C.
7. A-ø7 is identical to position C due to its effective range. At this time, the center ø7 will be 2 points.
8. The number of holes at complete fixing positions differs depending on the overall scale length. For details, refer to the following description.

For 2 holes: 2-point fixing at both hole positions

For 3 holes: 2-point fixing at the 2-hole positions of A and C (recommended)

A B C

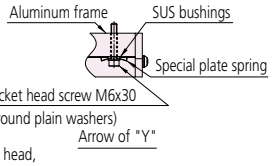

Dimensions

Order No.	Model	Effective range L_0 (mm)	Maximum travel length L_1 (mm)	Overall length L_2 (mm)	Mounting pitch			n
					L_3 (mm)	L_4 (mm)	L_5 (mm)	
559-100-□3	**AT11□3(A)-140**	140	148	259	100	135	90	2
559-101-□3	**AT11□3(A)-240**	240	248	359	150	185	147.5	3
559-102-□3	**AT11□3(A)-340**	340	348	459	200	235	190	4
559-103-□3	**AT11□3(A)-440**	440	448	559	250	285	247.5	5
559-104-□3	**AT11□3(A)-540**	540	548	659	300	335	290	6
559-105-□3	**AT11□3(A)-640**	640	648	759	350	385	347.5	7
559-106-□3	**AT11□3(A)-740**	740	748	859	400	435	390	8
559-107-□3	**AT11□3(A)-840**	840	848	959	450	485	447.5	9
559-108-□3	**AT11□3(A)-940**	940	948	1059	500	535	490	10
559-109-□3	**AT11□3(A)-1040**	1040	1048	1159	550	585	547.5	11
559-110-□3	**AT11□3(A)-1140**	1140	1148	1259	600	635	590	12
559-111-□3	**AT11□3(A)-1240**	1240	1248	1359	650	685	647.5	13
559-112-□3	**AT11□3(A)-1340**	1340	1348	1459	700	735	690	14
559-113-□3	**AT11□3(A)-1440**	1440	1448	1559	750	785	747.5	15
559-114-□3	**AT11□3(A)-1540**	1540	1548	1659	800	835	790	16
559-115-□3	**AT11□3(A)-1640**	1640	1648	1759	850	885	847.5	17
559-116-□3	**AT11□3(A)-1740**	1740	1748	1859	900	935	890	18
559-117-□3	**AT11□3(A)-1840**	1840	1848	1959	950	985	947.5	19
559-118-□3	**AT11□3(A)-2040**	2040	2048	2159	1050	1085	1047.5	21
559-119-□3	**AT11□3(A)-2240**	2240	2248	2359	1150	1185	1147.5	23
559-120-□3	**AT11□3(A)-2440**	2440	2448	2559	1250	1285	1247.5	25
559-121-□3	**AT11□3(A)-2640**	2640	2648	2759	1350	1385	1347.5	27
559-122-□3	**AT11□3(A)-2840**	2840	2848	2959	1450	1485	1447.5	29
559-123-□3	**AT11□3(A)-3040**	3040	3048	3159	1550	1585	1547.5	31

Note: □ in Order No. and Model indicates the interface specification as follows:

AT1143: **4**
AT1153: **5**
AT1103A: **0**

External View

Unit: mm

• **ABS AT1123**

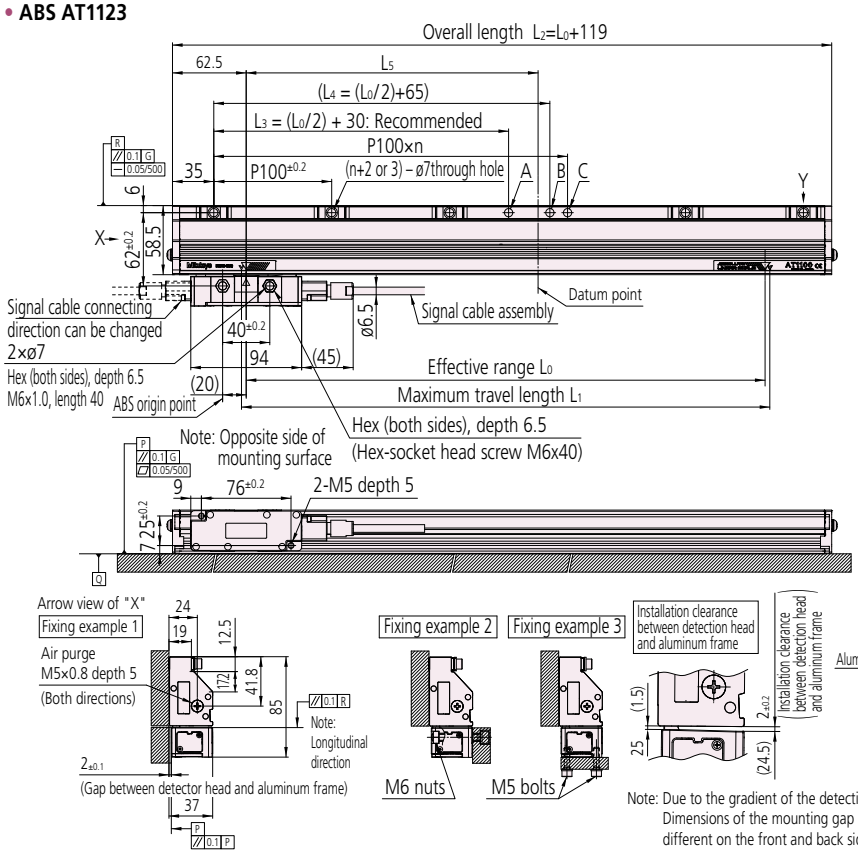

Notes:
1. G represents the machine guide.
2. P represents the opposite side of the aluminum frame mounting surface. Also, S represents the opposite side of the detector head mounting surface.
3. Q and R represent the linear scale's reference surfaces for mounting.
4. For descriptions of L_0 to L_5 in the figure, refer to the table below.
5. Check the mounting dimensions using the head clamping tool.
6. For the center ø7, it is recommended that it be fastened at two points, A and C.
7. A-ø7 is identical to position C due to its effective range. At this time, the center ø7 will be 2 points.
8. The number of holes at complete fixing positions differs depending on the overall scale length. For details, refer to the following description.

For 2 holes: 2-point fixing at both hole positions

For 3 holes: 2-point fixing at the 2-hole positions of A and C (recommended)

A B C

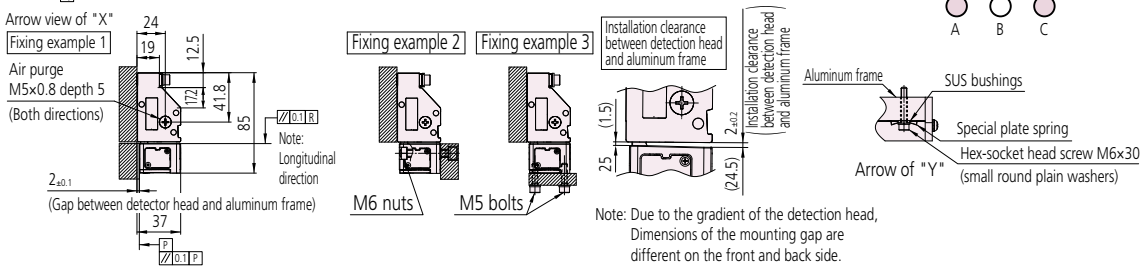

Note: Due to the gradient of the detection head, Dimensions of the mounting gap are different on the front and back side.

Dimensions

Order No.	Model	Effective range L_0 (mm)	Maximum travel length L_1 (mm)	Overall length L_2 (mm)	Mounting pitch			n
					L_3 (mm)	L_4 (mm)	L_5 (mm)	
559-100-23	**AT1123-140**	140	148	259	100	135	90	2
559-101-23	**AT1123-240**	240	248	359	150	185	147.5	3
559-102-23	**AT1123-340**	340	348	459	200	235	190	4
559-103-23	**AT1123-440**	440	448	559	250	285	247.5	5
559-104-23	**AT1123-540**	540	548	659	300	335	290	6
559-105-23	**AT1123-640**	640	648	759	350	385	347.5	7
559-106-23	**AT1123-740**	740	748	859	400	435	390	8
559-107-23	**AT1123-840**	840	848	959	450	485	447.5	9
559-108-23	**AT1123-940**	940	948	1059	500	535	490	10
559-109-23	**AT1123-1040**	1040	1048	1159	550	585	547.5	11
559-110-23	**AT1123-1140**	1140	1148	1259	600	635	590	12
559-111-23	**AT1123-1240**	1240	1248	1359	650	685	647.5	13
559-112-23	**AT1123-1340**	1340	1348	1459	700	735	690	14
559-113-23	**AT1123-1440**	1440	1448	1559	750	785	747.5	15
559-114-23	**AT1123-1540**	1540	1548	1659	800	835	790	16
559-115-23	**AT1123-1640**	1640	1648	1759	850	885	847.5	17
559-116-23	**AT1123-1740**	1740	1748	1859	900	935	890	18
559-117-23	**AT1123-1840**	1840	1848	1959	950	985	947.5	19
559-118-23	**AT1123-2040**	2040	2048	2159	1050	1085	1047.5	21
559-119-23	**AT1123-2240**	2240	2248	2359	1150	1185	1147.5	23
559-120-23	**AT1123-2440**	2440	2448	2559	1250	1285	1247.5	25
559-121-23	**AT1123-2640**	2640	2648	2759	1350	1385	1347.5	27
559-122-23	**AT1123-2840**	2840	2848	2959	1450	1485	1447.5	29
559-123-23	**AT1123-3040**	3040	3048	3159	1550	1585	1547.5	31

ABS AT1100 Signal Check Program

The ABS AT1100 signal check program can diagnose the scale signal by connecting the ABS AT1100 Series to the conversion unit connected to a PC with the "ABS AT1100 signal check program" installed.

The AT1100 signal check program allows the PC to execute the following.

1) Confirm the signal display with "Signal Monitor"
2) Confirm the track status with "Track Error Monitor"
3) Confirmation of position data with "Position Monitor"
4) Check error history by "Error History Check"

• Required items

Item	Quantity	Details	Notes
PC*	1	DOS/V (Windows version)	Provided by user
Conversion unit	1	USB-485 (422) DS15P (System Sacom Industry Corp.)	Optional (bundle)
Connection cable A	1	USB cable	
Connection cable B	1	RS-485 cable or RS-422 cable	
Application software	1	ABS AT1100 Signal Check Program	

* This program requires a PC with the following operating environment.

CPU	: 1 GHz or faster
Memory	: 1 GB min.
Program size	: 10 MB
OS	: Windows 7 or later
Monitor	: 1024×768 or higher is recommended

• "Conversion unit, application software" set

Order No.	Applicable model	Conversion unit	Connecting cable B
06AGD689	AT1103A	USB-485 DS15P	MIT cable (Mitutoyo ENSIS)
06AGD690	AT1143	USB-422 DS15P	MDS cable (Mitsubishi Electric Corporation)
06AGD691	AT1153	USB-422 DS15P	FANUC cable

Note: Each manufacture I/F has different Order No., since connection cable B and Conversion unit are different for each I/F.

• Connection details

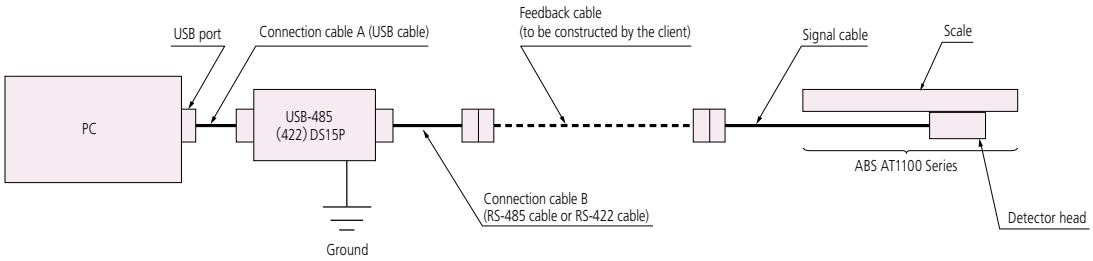

Note 1: To prevent the possibility of electric shock the device must be grounded.
Note 2: The conversion unit's power source is supplied via connection cable A from the PC USB port.

ABS AT1300 Series

(Resolution 0.001 / 0.01 / 0.05 µm)

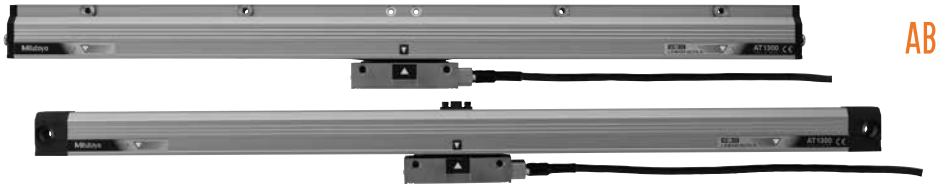

ABSOLUTE™

Features

- Outstanding resistance to contamination compared to conventional optical types by using a new detection principle (in-house testing result).
- Features a new coolant-proof design incorporating a high-performance rubber seal to provide higher reliability in the harsh factory environment.
- Delivers high accuracy and the outstanding resolution of 0.001 µm, the best-in-class in absolute scales.
- Allows space-saving design thanks to a slim form. (**AT500-S** and **AT500-H** are compatible with each other in installation.)
- Supports the interfaces of various manufacturers allowing a variety of system configurations.

Meaning of Model No.

ABS AT13□□□ - □□□□ - □

Interface specifications

Effective range

Type of the scale unit
S: High rigidity type
H: High accuracy type

Applicable system	Model
FANUC CORPORATION Serial αi Interface	**ABS AT135□**
Mitsubishi Electric Corporation MDS-D/MDS-DH Series	**ABS AT134□**
Mitsubishi Electric Corporation MELSERVO servo amplifier MR-J4 Series	**ABS AT134□A**
Mitutoyo ENSIS	**ABS AT130□A**

Note 1: Be sure to contact each manufacturer for details of the applicable systems.
Note 2: **ABS AT13□□□**

Resolution
7: 0.001 µm
4: 0.01 µm
3: 0.05 µm

Transmission method
Nothing: Full duplex communication
A: Half-duplex communication

Scale configuration

[ABS AT1300-S Series]

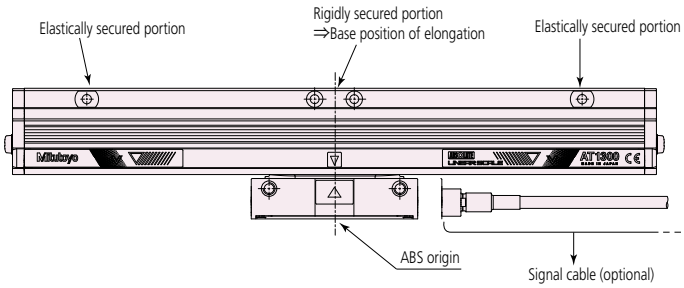

[ABS AT1300-H Series]

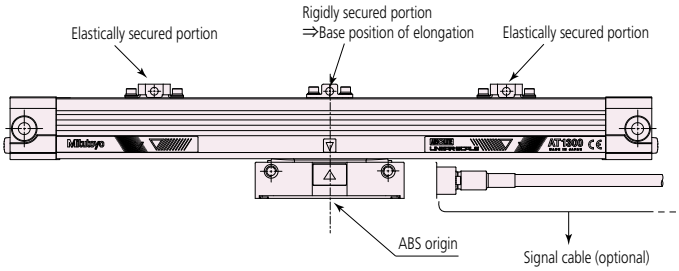

Note: Signal cable is optional.
For Output specifications and Lineup of Cables, refer to page 62 and 63.

Specifications

Items / Model	High rigidity type ABS AT13□□(A)-S	High accuracy type ABS AT13□□(A)-H
Detection method	Optical linear encoder	
Mounting method	Multi-point elastic fixing	3 or 5-point elastic fixing
Reference position for expansion due to temperature variation	Center of the effective measuring length	
Effective range	19 types: 100, 200, 300, 400, 500, 600, 700, 800, 900, 1000, 1100, 1200, 1300, 1400, 1500, 1600, 1800, 2000, 2200 mm	15 types: 100, 150, 200, 250, 300, 350, 400, 450, 500, 600, 700, 750, 800, 900, 1000 mm
Resolution	0.001/0.01/0.05 μm	
Maximum response speed	3,000 mm/s	
Indication accuracy (20° C)	3 + 3Lα/1000 (μm)	2 + 2Lα/1000 (μm)
Expansion coefficient	≈8×10^{-6}/K	
Vibration resistance	≤196 m/s^2 (55 - 2000 Hz)	≤147 m/s^2 (55 - 2000 Hz)
Shock resistance	≤343 m/s^2 (1/2 sin 11 ms)	≤196 m/s^2 (1/2 sin 11 ms)
Power supply voltage	5 VDC ±10%	
Maximum current consumption	270 mA (Max)	
Operational temperature/humidity ranges	0 to 50 °C 20 - 80%RH (non-condensing)	
Storage temperature/humidity ranges	-20 to 70 °C 20 - 80%RH (non-condensing)	

System Configuration (Example)

[Connection example 1]

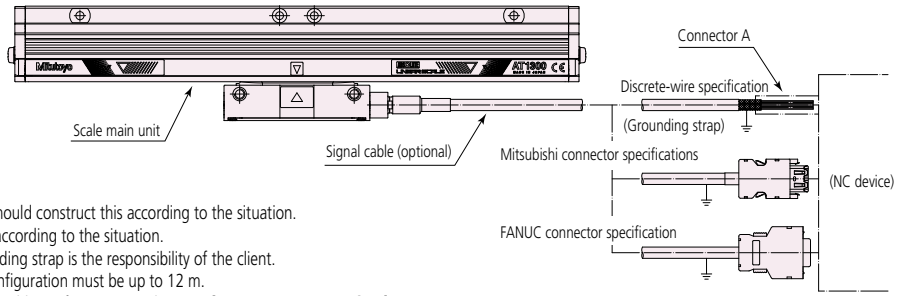

(NOTE)
1. The signal cable is an option. The client should construct this according to the situation.
2. The client should configure connector A according to the situation.
3. Installation of connector A and the grounding strap is the responsibility of the client.
4. Each cable length in the above system configuration must be up to 12 m.
   If any cable length exceeds 12 m, use the cable configuration as shown in [**Connection example 2**].

[Connection example 2]

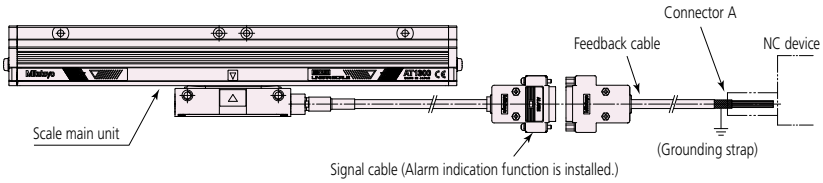

- Connector A on the NC unit side needs to be prepared by the client.
- Connecting work of connector A and the earth bar should be performed by the client.
  Follow the manual of the NC unit to be used for the detailed description of this connection.
- When using a client prepared feedback cable, refer to the following.
  Maximum cable length (signal cable + feedback cable)···29 m*
  Recommended cable material: A66L-0001-0286 (supplied by Hitachi Cable, Ltd. or Oki Electric Cable Co., Ltd.)
  * If the total length of cables is 13 to 29 m, then the maximum signal cable length should be 6 m.

(NOTE)
1. If you use other than the recommended cable above-described, be sure to use a shielded cable in which the total impedance of power lines (+5 V and 0 V) is 0.65 Ω or less for the entire length.
2. Route the feedback cable so that it will not be repeatedly bent.

Output specifications

• Flying lead specifications

Wire color	Signal
Brown	SD
Red	*SD
Orange	RQ (REQ)
Yellow	*RQ (REQ)
White (2P)	+5 V
Black (2P)	GND
Shield wire	F.G

* Cable to be constructed by the client (A total of 29 m with the signal cable).

• Mitsubishi connector specifications

Pin No.	Signal
1	5 V
2	GND
3	RQDT
4	$\overline{\text{RQDT}}$
7	DT
8	$\overline{\text{DT}}$
5, 6, 9, 10	Not used
Connector shell	F.G

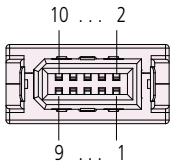

• FANUC connector specifications

Pin No.	Signal
1	SD
2	*SD
5	RQ (REQ)
6	*RQ (REQ)
12, 14	GND
18, 20	+5 V
16	F.G
3, 4, 7 - 11, 13, 15, 17, 19	Not used

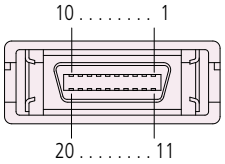

• Signal cable (Alarm indication function is installed) (D-sub connector: Pin contact, 15-pin)

Pin No.	Signal
1, 2, 13	GND
3, 4, 11	+5 V
5	DT
6	$\overline{\text{DT}}$
7	RQDT
8	$\overline{\text{RQDT}}$
9, 10, 12	Not used
15 Connector shell	F.G

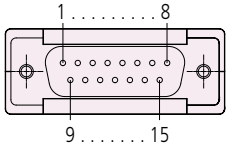

Cable Dimensions

Unit: mm

• Flying lead specifications

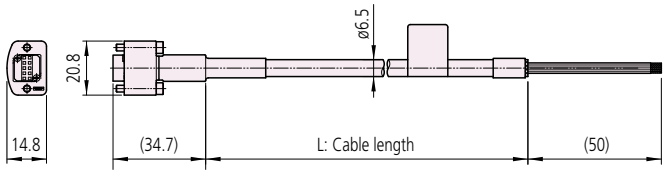

Order No.	Model	Cable length (m)
06AFS310-1	AT1300 discrete-wire cable 1 m	1
06AFS310-2	AT1300 discrete-wire cable 2 m	2
06AFS310-3	AT1300 discrete-wire cable 3 m	3
06AFS310-4	AT1300 discrete-wire cable 4 m	4
06AFS310-5	AT1300 discrete-wire cable 5 m	5
06AFS310-6	AT1300 discrete-wire cable 6 m	6
06AFS310-7	AT1300 discrete-wire cable 7 m	7
06AFS310-8	AT1300 discrete-wire cable 8 m	8
06AFS310-9	AT1300 discrete-wire cable 9 m	9
06AFS310-12	AT1300 discrete-wire cable 12 m	12

• FANUC connector specifications

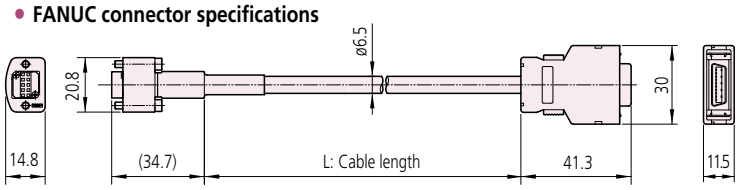

Order No.	Model	Cable length (m)
06AFS312-1	AT1300 Cable FUNUC 1 m	1
06AFS312-2	AT1300 Cable FUNUC 2 m	2
06AFS312-3	AT1300 Cable FUNUC 3 m	3
06AFS312-4	AT1300 Cable FUNUC 4 m	4
06AFS312-5	AT1300 Cable FUNUC 5 m	5
06AFS312-6	AT1300 Cable FUNUC 6 m	6
06AFS312-7	AT1300 Cable FUNUC 7 m	7
06AFS312-8	AT1300 Cable FUNUC 8 m	8
06AFS312-9	AT1300 Cable FUNUC 9 m	9
06AFS312-12	AT1300 Cable FUNUC 12 m	12

• Mitsubishi connector specifications

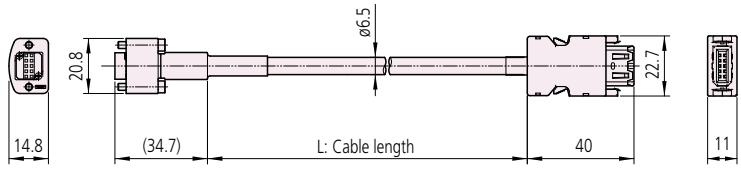

Order No.	Model	Cable length (m)
06AFS311-1	AT1300 Cable MDS-D 1 m	1
06AFS311-2	AT1300 Cable MDS-D 2 m	2
06AFS311-3	AT1300 Cable MDS-D 3 m	3
06AFS311-4	AT1300 Cable MDS-D 4 m	4
06AFS311-5	AT1300 Cable MDS-D 5 m	5
06AFS311-6	AT1300 Cable MDS-D 6 m	6
06AFS311-7	AT1300 Cable MDS-D 7 m	7
06AFS311-8	AT1300 Cable MDS-D 8 m	8
06AFS311-9	AT1300 Cable MDS-D 9 m	9
06AFS311-12	AT1300 Cable MDS-D 12 m	12

• Signal cable (Alarm indication function is installed) (D-sub connector: Pin contact, 15-pin)

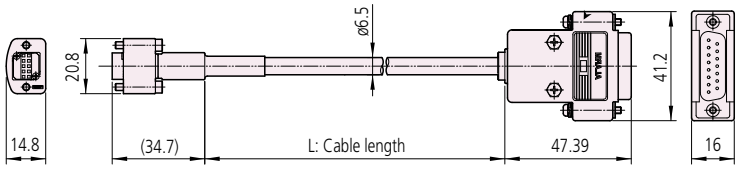

Order No.	Model	Cable length (m)
06AFS313-1	AT1300 Cable D15 1m	1
06AFS313-2	AT1300 Cable D15 2m	2
06AFS313-3	AT1300 Cable D15 3m	3
06AFS313-4	AT1300 Cable D15 4m	4
06AFS313-5	AT1300 Cable D15 5m	5
06AFS313-6	AT1300 Cable D15 6m	6
06AFS313-7	AT1300 Cable D15 7m	7
06AFS313-8	AT1300 Cable D15 8m	8
06AFS313-9	AT1300 Cable D15 9m	9
06AFS313-12	AT1300 Cable D15 12m	12

External View

Unit: mm

• **ABS AT1300-S Series**

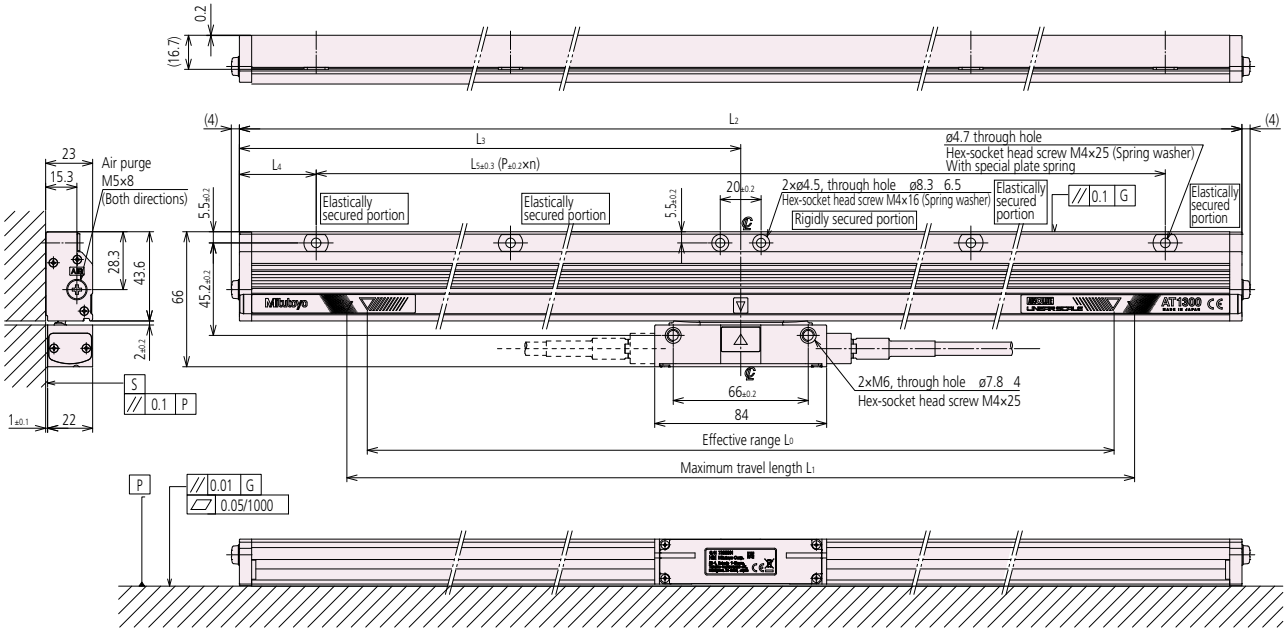

(Note)
1. G represents the machine guide.
2. P indicates the mating surface for mounting the aluminum frame.
   S indicates the mating surface for mounting the detector head.
3. For the dimensions L_0 to L_5, P and in the figure, refer to the Dimensions list.

Dimensions

Effective range L_0 (mm)	Maximum travel length L_1 (mm)	Overall length L_2 (mm)	Distance to the center point L_3 (mm)	Mounting pitch			n
				L_4 (mm)	L_5 (mm)	P (mm)	
100	120	225	112.5	37.5	150	75	2
200	220	325	162.5	37.5	250	125	2
300	320	425	212.5	37.5	350	175	2
400	420	525	262.5	62.5	400	200	2
500	520	625	312.5	62.5	500	125	4
600	620	725	362.5	62.5	600	150	4
700	720	825	412.5	62.5	700	175	4
800	820	925	462.5	62.5	800	200	4
900	920	1025	512.5	62.5	900	150	6
1000	1020	1125	562.5	37.5	1050	175	6
1100	1120	1225	612.5	87.5	1050	175	6
1200	1220	1325	616.5	62.5	1200	200	6
1300	1320	1425	712.5	112.5	1200	150	8
1400	1420	1525	762.5	62.5	1400	175	8
1500	1520	1625	812.5	112.5	1400	175	8
1600	1620	1725	862.5	62.5	1600	200	8
1800	1820	1925	962.5	87.5	1750	175	10
2000	2020	2125	1062.5	62.5	2000	200	10
2200	2220	2325	1162.5	112.5	2100	175	12

Order No. and Model No.

• **ABS AT1353-S / AT1354-S / AT1357-S**

Order No.	Model
559-500-5□	**ABS AT135□-100-S**
559-502-5□	**ABS AT135□-200-S**
559-504-5□	**ABS AT135□-300-S**
559-506-5□	**ABS AT135□-400-S**
559-508-5□	**ABS AT135□-500-S**
559-509-5□	**ABS AT135□-600-S**
559-510-5□	**ABS AT135□-700-S**
559-512-5□	**ABS AT135□-800-S**
559-513-5□	**ABS AT135□-900-S**
559-514-5□	**ABS AT135□-1000-S**
559-515-5□	**ABS AT135□-1100-S**
559-516-5□	**ABS AT135□-1200-S**
559-517-5□	**ABS AT135□-1300-S**
559-518-5□	**ABS AT135□-1400-S**
559-519-5□	**ABS AT135□-1500-S**
559-520-5□	**ABS AT135□-1600-S**
559-521-5□	**ABS AT135□-1800-S**
559-522-5□	**ABS AT135□-2000-S**
559-523-5□	**ABS AT135□-2200-S**

Note: The □ in the Order No. is as follows.
AT1353: 3
AT1354: 4
AT1357: 7

• **ABS AT1343-S / AT1344-S / AT1347-S**

Order No.	Model
559-500-3□	**ABS AT134□-100-S**
559-502-3□	**ABS AT134□-200-S**
559-504-3□	**ABS AT134□-300-S**
559-506-3□	**ABS AT134□-400-S**
559-508-3□	**ABS AT134□-500-S**
559-509-3□	**ABS AT134□-600-S**
559-510-3□	**ABS AT134□-700-S**
559-512-3□	**ABS AT134□-800-S**
559-513-3□	**ABS AT134□-900-S**
559-514-3□	**ABS AT134□-1000-S**
559-515-3□	**ABS AT134□-1100-S**
559-516-3□	**ABS AT134□-1200-S**
559-517-3□	**ABS AT134□-1300-S**
559-518-3□	**ABS AT134□-1400-S**
559-519-3□	**ABS AT134□-1500-S**
559-520-3□	**ABS AT134□-1600-S**
559-521-3□	**ABS AT134□-1800-S**
559-522-3□	**ABS AT134□-2000-S**
559-523-3□	**ABS AT134□-2200-S**

Note: The □ in the Order No. is as follows.
AT1343: 3
AT1344: 4
AT1347: 7

• **ABS AT1343A-S / AT1344A-S / AT1347A-S**

Order No.	Model
559-500-4□	**ABS AT134□A-100-S**
559-502-4□	**ABS AT134□A-200-S**
559-504-4□	**ABS AT134□A-300-S**
559-506-4□	**ABS AT134□A-400-S**
559-508-4□	**ABS AT134□A-500-S**
559-509-4□	**ABS AT134□A-600-S**
559-510-4□	**ABS AT134□A-700-S**
559-512-4□	**ABS AT134□A-800-S**
559-513-4□	**ABS AT134□A-900-S**
559-514-4□	**ABS AT134□A-1000-S**
559-515-4□	**ABS AT134□A-1100-S**
559-516-4□	**ABS AT134□A-1200-S**
559-517-4□	**ABS AT134□A-1300-S**
559-518-4□	**ABS AT134□A-1400-S**
559-519-4□	**ABS AT134□A-1500-S**
559-520-4□	**ABS AT134□A-1600-S**
559-521-4□	**ABS AT134□A-1800-S**
559-522-4□	**ABS AT134□A-2000-S**
559-523-4□	**ABS AT134□A-2200-S**

Note: The □ in the Order No. is as follows.
AT1343A: 3
AT1344A: 4
AT1347A: 7

• **ABS AT1303A-S / AT1304A-S / AT1307A-S**

Order No.	Model
559-500-0□	**ABS AT130□A-100-S**
559-502-0□	**ABS AT130□A-200-S**
559-504-0□	**ABS AT130□A-300-S**
559-506-0□	**ABS AT130□A-400-S**
559-508-0□	**ABS AT130□A-500-S**
559-509-0□	**ABS AT130□A-600-S**
559-510-0□	**ABS AT130□A-700-S**
559-512-0□	**ABS AT130□A-800-S**
559-513-0□	**ABS AT130□A-900-S**
559-514-0□	**ABS AT130□A-1000-S**
559-515-0□	**ABS AT130□A-1100-S**
559-516-0□	**ABS AT130□A-1200-S**
559-517-0□	**ABS AT130□A-1300-S**
559-518-0□	**ABS AT130□A-1400-S**
559-519-0□	**ABS AT130□A-1500-S**
559-520-0□	**ABS AT130□A-1600-S**
559-521-0□	**ABS AT130□A-1800-S**
559-522-0□	**ABS AT130□A-2000-S**
559-523-0□	**ABS AT130□A-2200-S**

Note: The □ in the Order No. is as follows.
AT1303A: 3
AT1304A: 4
AT1307A: 7

External View

Unit: mm

• ABS AT1300-H Series

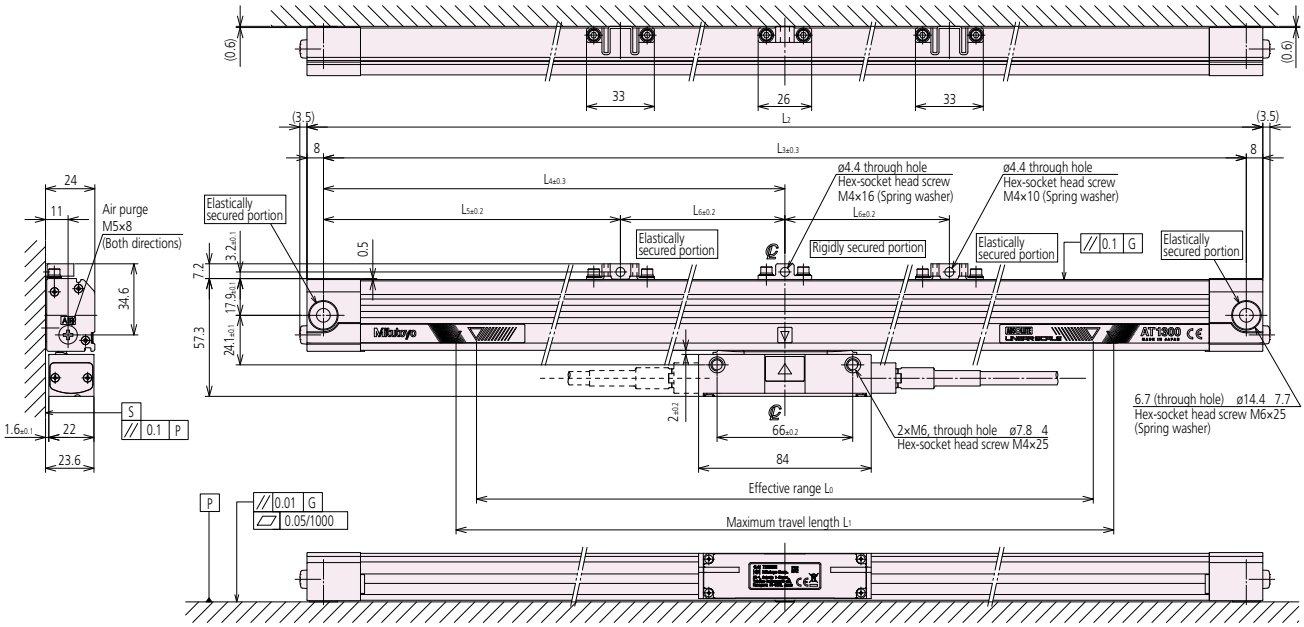

(Note)
1. G represents the machine guide.
2. P indicates the mating surface for mounting the aluminum frame.
   S indicates the mating surface for mounting the detector head.
3.For the dimensions L_0 to L_5, P and in the figure, refer to the Dimensions list.

Dimensions

Effective range L_0 (mm)	Maximum travel length L_1 (mm)	Overall length L_2 (mm)	Distance to the center point L_4 (mm)	Mounting pitch		
				L_3 (mm)	L_5 (mm)	L_6 (mm)
100	120	265	124.5	249	—	—
150	170	315	149.5	299	—	—
200	220	365	174.5	349	—	—
250	270	415	199.5	399	—	—
300	320	465	224.5	449	—	—
350	370	515	249.5	499	—	—
400	420	565	274.5	549	—	—
450	470	615	299.5	599	—	—
500	520	665	324.5	649	—	—
600	620	765	(374.5)	749	204.5	170
700	720	865	(424.5)	849	224.5	200
750	770	915	(449.5)	899	224.5	225
800	820	965	(474.5)	949	224.5	230
900	920	1065	(524.5)	1049	264.5	260
1000	1020	1165	(574.5)	1149	284.5	290

Order No. and Model No.

• ABS AT1353-H / AT1354-H / AT1357-H

Order No.	Model
559-524-5□	**ABS AT135□-100-H**
559-525-5□	**ABS AT135□-150-H**
559-526-5□	**ABS AT135□-200-H**
559-527-5□	**ABS AT135□-250-H**
559-528-5□	**ABS AT135□-300-H**
559-529-5□	**ABS AT135□-350-H**
559-530-5□	**ABS AT135□-400-H**
559-531-5□	**ABS AT135□-450-H**
559-532-5□	**ABS AT135□-500-H**
559-533-5□	**ABS AT135□-600-H**
559-534-5□	**ABS AT135□-700-H**
559-535-5□	**ABS AT135□-750-H**
559-536-5□	**ABS AT135□-800-H**
559-537-5□	**ABS AT135□-900-H**
559-538-5□	**ABS AT135□-1000-H**

Note: The □ in the Order No. is as follows.
AT1353: 3
AT1354: 4
AT1357: 7

• ABS AT1343-H / AT1344-H / AT1347-H

Order No.	Model
559-524-3□	**ABS AT134□-100-H**
559-525-3□	**ABS AT134□-150-H**
559-526-3□	**ABS AT134□-200-H**
559-527-3□	**ABS AT134□-250-H**
559-528-3□	**ABS AT134□-300-H**
559-529-3□	**ABS AT134□-350-H**
559-530-3□	**ABS AT134□-400-H**
559-531-3□	**ABS AT134□-450-H**
559-532-3□	**ABS AT134□-500-H**
559-533-3□	**ABS AT134□-600-H**
559-534-3□	**ABS AT134□-700-H**
559-535-3□	**ABS AT134□-750-H**
559-536-3□	**ABS AT134□-800-H**
559-537-3□	**ABS AT134□-900-H**
559-538-3□	**ABS AT134□-1000-H**

Note: The □ in the Order No. is as follows.
AT1343: 3
AT1344: 4
AT1347: 7

• ABS AT1343A-H / AT1344A-H / AT1347A-H

Order No.	Model
559-524-4□	**ABS AT134□A-100-H**
559-525-4□	**ABS AT134□A-150-H**
559-526-4□	**ABS AT134□A-200-H**
559-527-4□	**ABS AT134□A-250-H**
559-528-4□	**ABS AT134□A-300-H**
559-529-4□	**ABS AT134□A-350-H**
559-530-4□	**ABS AT134□A-400-H**
559-531-4□	**ABS AT134□A-450-H**
559-532-4□	**ABS AT134□A-500-H**
559-533-4□	**ABS AT134□A-600-H**
559-534-4□	**ABS AT134□A-700-H**
559-535-4□	**ABS AT134□A-750-H**
559-536-4□	**ABS AT134□A-800-H**
559-537-4□	**ABS AT134□A-900-H**
559-538-4□	**ABS AT134□A-1000-H**

Note: The □ in the Order No. is as follows.
AT1343A: 3
AT1344A: 4
AT1347A: 7

• ABS AT1303A-H / AT1304A-H / AT1307A-H

Order No.	Model
559-524-0□	**ABS AT130□-100-H**
559-525-0□	**ABS AT130□-150-H**
559-526-0□	**ABS AT130□-200-H**
559-527-0□	**ABS AT130□-250-H**
559-528-0□	**ABS AT130□-300-H**
559-529-0□	**ABS AT130□-350-H**
559-530-0□	**ABS AT130□-400-H**
559-531-0□	**ABS AT130□-450-H**
559-533-0□	**ABS AT130□-500-H**
559-533-0□	**ABS AT130□-600-H**
559-534-0□	**ABS AT130□-700-H**
559-535-0□	**ABS AT130□-750-H**
559-536-0□	**ABS AT130□-800-H**
559-537-0□	**ABS AT130□-900-H**
559-538-0□	**ABS AT130□-1000-H**

Note: The □ in the Order No. is as follows.
AT1303A: 3
AT1304A: 4
AT1307A: 7

ABS AT1300 Signal Check Program

- The ABS AT1300 signal check program can diagnose the scale signal by connecting the ABS AT1300 Series to the conversion unit connected to a PC with the "ABS AT1300 signal check program" installed.

The ABS AT1300 signal check program allows the PC to execute the following.

1) Confirm and save the scale signal by "Signal Confirmation".
2) Confirm the scale error position by "Position Measurement".
3) Check error history by "Error History Check".

• Required items

Item	Quantity	Details	Notes
PC*	1	DOS/V (Windows version)	Provided by user
Conversion unit	1	USB-485 (422) DS15P (System Sacom Industry Corp.)	Optional (bundle)
Connection cable A	1	USB cable	
Connection cable B	1	RS-485 cable or RS-422 cable	
Application software	1	ABS AT1300 Signal Check Program	

* This program requires a PC with the following operating environment.

CPU	: 1 GHz or faster
Memory	: 1 GB min.
Program size	: 10 MB
OS	: Windows 7 or later
Monitor	: 1024×768 or higher is recommended

• "Conversion unit, application software" set

Order No.	Applicable model	Conversion unit	Connecting cable B
06AGE490	AT1303A AT1304A AT1307A	USB-485 DS15P	MIT cable (Mitutoyo ENSIS)
06AFY987	AT1343A AT1344A AT1347A	USB-485 DS15P	MEL cable (Mitsubishi Electric Corporation)
06AFY988	AT1343 AT1344 AT1347	USB-422 DS15P	MDS cable (Mitsubishi Electric Corporation)
06AFY989	AT1353 AT1354 AT1357	USB-422 DS15P	FANUC cable

Note: Each manufacture I/F has different Part No., since connection cable B and Conversion unit are different for each I/F.

• Connection details

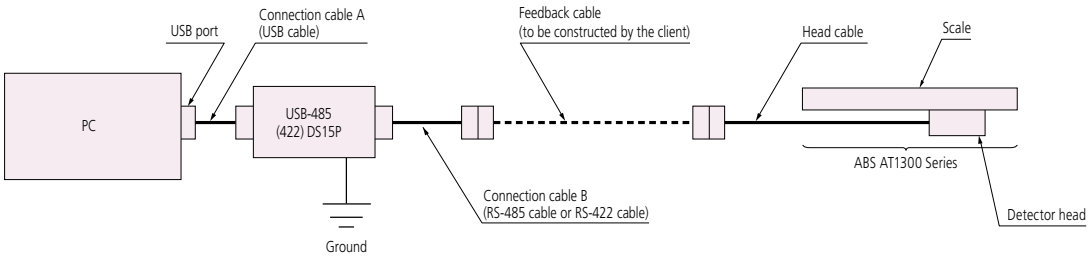

Note: To prevent the possibility of electric shock the device must be grounded.

Discontinued models and succession models specification compatibility

△: Compatible (with limitations)

Separate type ST scales

Discontinued models	Current model	Scale grating pitch	Output signal specifications	Accuracy	Compatibility with mounting position	Output connector specification pin assignment
ST31A, ST32A	**ST36A**	Yes	Yes	Yes	No	Yes
ST33C	**ST36C**	Yes	Yes	Yes	No	No
ST52B	**ST46-EZA**	Yes	Yes	Yes	No	No
ST62C	**ST46-EZA**	Yes	△*1	Yes	No	No
ST34C	**ST36C**	Yes	Yes	Yes	No	Yes
ST44B/ST44C	**ST46-EZA**	Yes	Yes	Yes	No	Yes
ST46	**ST46-EZA**	Yes	Yes	Yes	No	Yes
LHS21/23C	—	—	—	—	—	—

*1 Up/down pulse output cannot be supported.

Assembly type AT scales

Discontinued models	Current model	Scale grating pitch	Output signal specifications	Accuracy	Compatibility with mounting position	Output connector specification pin assignment
AT11-N	**AT113**	Yes	△*2	Yes	Yes	△*2
AT11-FN		Yes	△*2	Yes	Yes	△*2
AT81-C	—	—	—	—	—	—
AT21-C	**AT211**	Yes	△*4	△*3	No	No
AT21		No	△*4	△*3	No	No
AT25	**AT211**	No	△*4	△*3	No	No
AT111	**AT113**	Yes	Yes	Yes	Yes	Yes
AT181	—	—	—	—	—	—
AT212	**AT211**	Yes	Yes	△*3	No	No

*2 This can only be supported with an adapter when connected to an old counter.
*3 This must be checked for each scale effective range.
*4 Compatible with the output signal of the pulse signal unit

Absolute scale unit

Discontinued models	Current model	Interface	Resolution	Maximum response speed	Compatibility with mounting position
ABS AT300 Series	**ABS AT1100 Series**	△	Yes	Yes	No
ABS AT500 Series	**ABS AT1300 Series**	△	△	Yes	Yes

Pulse Signal Interface Unit

Discontinued models	Current model	Output signal specifications	Power supply specifications	Compatibility with mounting position	Output connector specification pin assignment
PSU-1/2	PSU-200*10	△*8	No	No	No
FPSU03 Series		△*8	No	No	△*9
FPSU05 Series		Yes	No	No	No
FPSU10 Series		Yes	No	No	No
FPSU4		Yes	Yes	No	Yes
FPSU21 Series		Yes	No	No	No
PSU11		△*8	No	No	△*9
PSU12/13		△*8	No	No	△*9
PSU14		Yes	Yes	No	Yes
PSU21 Series		△*8	No	No	△*9
PSU-100 Series		Yes	Yes	Yes	Yes
PDS11		△*8	No	No	△*9

*8 Compatible only with 2-phase square-wave signals.
*9 Compatible only with connector formats.
*10 If **PSU-200** changes, it may be necessary to replace scale.

Note 1: The compatibility above relates to standard specifications.
Note 2: If current model changes, check the direction of output signal before connecting. If the direction is different, the device may run out of control.
Note 3: For models other than shown above, please contact us.

Handling linear scales

Mounting scales

1. AT scale mounting position

The scale unit is designed so that it is difficult for contamination to enter the unit, but determine the mounting position after considering the arrival directions of coolant and dust so that these substances do not come into direct contact with the aperture. Also, be sure to prepare a scale cover.

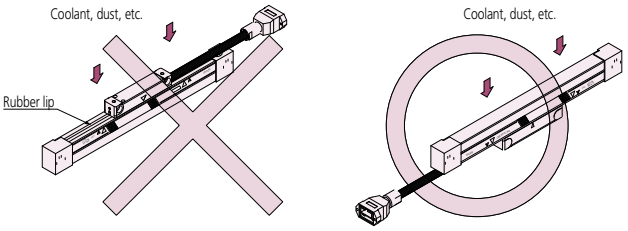

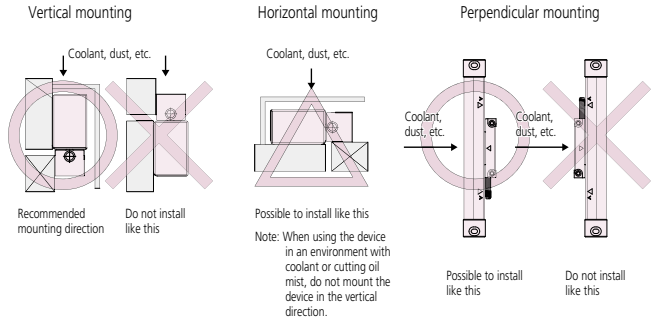

2. Mounting the AT scale unit

As shown in the following figure, use dial gages or similar devices close to the two effective range marks to check and adjust their parallelism with the machine guideway.
To adjust the parallelism: (1) move the mechanically movable parts such as the slide table to adjust the parallelism of the scale unit or (2) measure the position from the mechanism's guide rail or from a corresponding reference.

- Permissible parallelism value: Less than 0.1 mm or less than 0.2 mm
  (This varies depending on the scale model.)

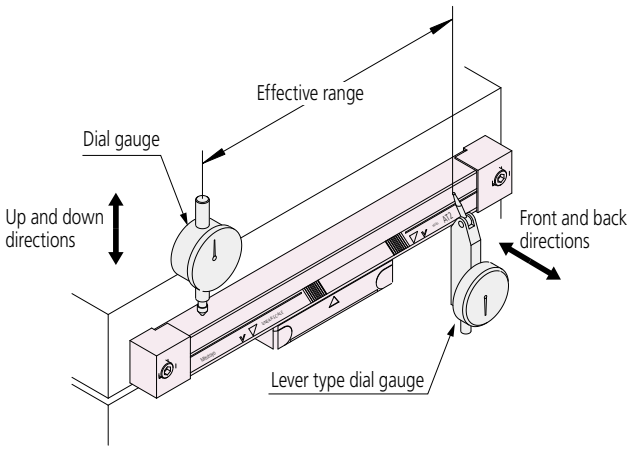

3. Cautions regarding mounting the ST scale (excluding the ABS ST700)

- Mount the main scale so that the detector head is facing the scale front surface (the surface on which rainbow colors are visible when light strikes the surface at an angle).
  (Models that have the Mitutoyo logo on the main scale are mounted correctly when the logo can be read from the detector head side.)
- Ambient light entering from the back of the main scale will cause incorrect operation, so the scale mounting design must ensure that ambient light does not enter.

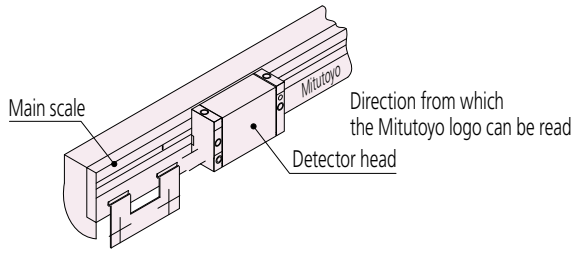

- Use a tool such as a lever type indicator or dial gage to move the head bracket and the scale mounting relatively in order to check whether the scale mounting surface has been prepared as shown in the mounting diagram.
- Use flexible adhesive with adhesive type scales.
  We recommend that you use KE441T manufactured by Shin-Etsu Chemical Co, Ltd.
- Remove the protective tape attached to the glass scale and detector head when you install the device.

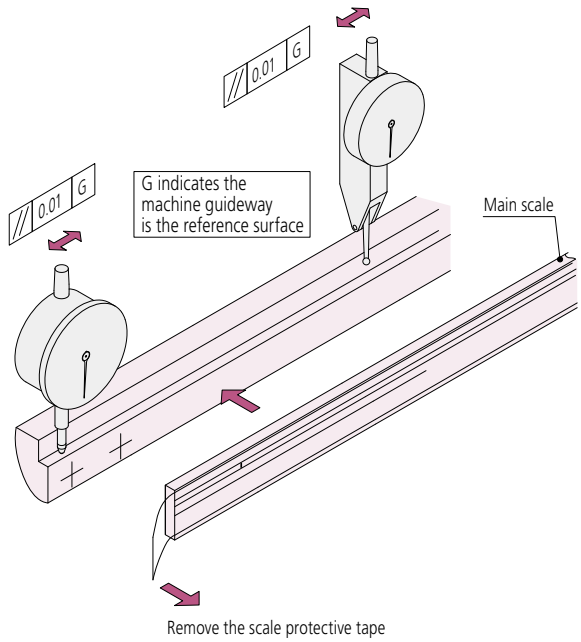

Specifications of Air Supply Unit for AT Scale

Supplying clean compressed air to the scale unit is important as a means of improving the environmental resistance (resistance to coolant and dust ingress) of assembly-type linear scales. Provide piping to either of the two M5 screw holes situated on both sides of the scale unit to enable compressed air delivery.

Note 1: **AT211** (multipoint fixed), **ABS AT1300** and **ABS AT1100** Series are standard equipped with the air supply connector.

Note 2: This air supply method is an auxiliary measure. The orientation of air supply piping is a matter of importance. Observe the piping orientation described in the manual to implement piping. After the air supply has been started, the air filter must be replaced periodically depending on the degree of contamination of the air source to be used. If a contaminated filter continues to be used this will allow contamination of the scale unit, resulting in failure.

1. Air quality specifications

ISO 85731-1 Class 1.4.1 or equivalent

Maximum particle diameter (μm)	0.1
Minimum-pressure dew point (°C)	+3
Oil concentration (mg/m³)	0.01

2. Air flow rate

10 to 20 L/min (per axis)

IMPORTANT: This flow rate should be maintained to the degree that air leaks out slightly past the dustproof rubber.

2.1 Using the Mitutoyo-spec fixed reducer (fixed reducer diameter: ø0.9)
Adjust air pressure so that the air flow rate becomes 10 to 20 L/min (per axis).
(TIP) When air pressure is 0.1 MPa for one axis, the airflow rate will be approx. 12.7 L/min.
When air pressure is 0.2 MPa, the airflow rate will be approx.19 L/min.

2.2 Using any other fixed reducer
Adjust air pressure so that the air flow rate becomes 10 to 20 L/min (per axis).
For the relation between flow rate and air pressure, refer to the flow rate characteristics (relation between flow rate depending on fixed reducer diameter and pressure) published by pneumatic device makers.

2.3 Using a flow regulating valve
Adjust air pressure so that the air flow rate becomes 10 to 20 L/min (per axis).
However, be careful not to supply a large flow of air before adjustment.
Otherwise damage may occur, resulting in a failure.

3. Air Supply Unit

[For a typical linear scale]

Be sure to use dry compressed air through an air dryer and a main line air filter without directly supplying air from the compressor. Replace each filter element every year. Mount the fixed reducer on the scale side.

• CKD Corporation air supply unit

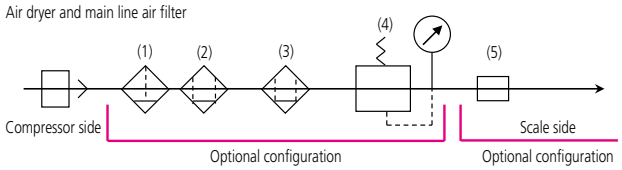

[For ABS AT1100 Series]

The **ABS AT1100** Series does not need an air dryer and a high-performance oil mist filter. Be sure to use dry compressed air through a main line air filter without directly supplying air from the compressor.

• CKD Corporation air supply unit

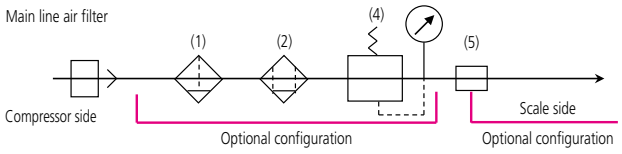

No	Configuration element	Specifications	Part No. Order No. (Mitutoyo)	Part No. Maker's model No. (Maker name)
(1)	Air filter	• Used fluid: Compressed air • Maximum allowable working pressure: 1.0 MPa • Guaranteed safe pressure: 1.5 MPa • Maximum particle diameter (filterability): 5 μm • Secondary oil concentration: —	—	F1000-8-W (CKD)
(2)	Oil mist filter	• Used fluid: Compressed air • Maximum allowable working pressure: 1.0 MPa • Guaranteed withstanding pressure: 1.5 MPa • Maximum particle diameter (filterability): 0.3 μm • Secondary oil concentration: 0.01 mg/m³ or less • Element replacement: Every year (6000 hours) or upon pressure drop of 0.1 MPa	—	M1000-8-W (CKD)
(3)	High-performance oil mist filter	• Used fluid: Compressed air • Maximum allowable working pressure: 1.0 MPa • Guaranteed safe pressure: 1.5 MPa • Maximum particle diameter (filterability): 0.01 μm • Secondary oil concentration: 0.001 mg/m³ or less • Element replacement: Every year (6000 hours) or upon pressure drop of 0.1 MPa	—	MX1000-8-W (CKD)
(4)	Regulator	• Used fluid: Compressed air • Maximum allowable working pressure: 1.0 MPa • Guaranteed withstanding pressure: 1.5 MPa • Settable pressure range: 0.1 to 0.7 MPa • Banned-oil processing type	—	RA-050-L (CKD)
(5)	Fixed reducer	• Used fluid: Air • Usable pressure range: 0.1 to 0.9 MPa • Screw clamping torque: 1.0 to 1.5 N•m • Flow rate at pressure of 0.1 MPa: Approx. 12.7 L/min • Flow rate at pressure of 0.2 MPa: Approx. 19 L/min (per axis)	06ACJ155	PC6-M5M-0.9 (Pisco custommade part)
(1) to (4)	Air unit ((1) Air filter + (2) Oil mist filter + (3) High-performance oil mist filter + (4) Regulator)	ISO -8573-1 Class 1.4.1 or equivalent • Maximum particle diameter (filterability): 0.01 μm • Minimum pressure dew point: — • Oil concentration (oil mist concentration): 0.001 mg/m³ or less • Pressure: Flow rate at pressure of 0.1 MPa: 12.7 L/min (per axis) • Maximum air flow rate: 75 L/min • Replacement cycle of each filter element: Yearly 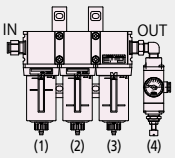	06ACJ154	—

Technical Information

Mitutoyo

• Air Unit Dimensions

Unit: mm

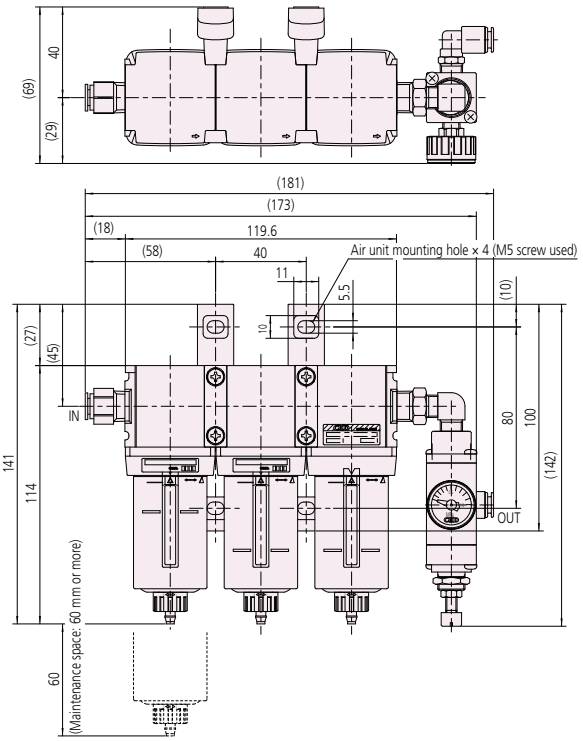

4. Connection Method

Be sure to use dry compressed air through an air dryer and a main line air filter without directly supplying air from the compressor.
Also, mount the fixed reducer on the scale side.

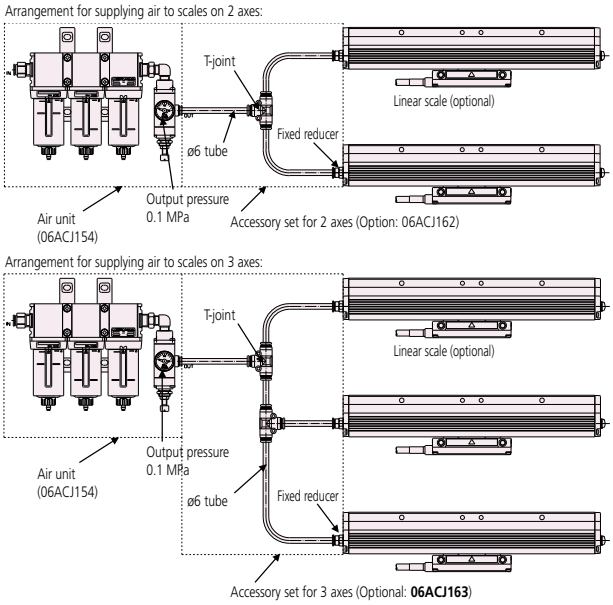

Note: One air supply unit allows connection of scales on up to 5 axes.
Accessory sets for 2 axes and 3 axes are available. The combination of these 2 sets allows a maximum 4 or 5 axes to be connected. ø6 air tubes 20 m in length are supplied with each accessory set.
Supply air to each linear scale for approx. 30 minutes prior to use. It is also recommended to supply air to each scale for approx. 30 minutes after use to provide further protection to the scale.

5. Air Supply Unit Configuration and Maintenance Parts

Order No.	Name/Packaged items	Remarks
06ACJ154	Air unit (Appendix (1) to (4))	Optional accessory (extra-cost)
06ACJ162	Accessory set for 2 axes/Fixed reducer: 2 pcs., ø6 urethane tube: 20 m, T-joint (2 pcs., one is a spare)	
06ACJ163	Accessory set for 3 axes/Fixed reducer: 3 pcs., ø6 urethane tube: 20 m, T-joint (3 pcs., one is a spare)	
06ACJ155	Fixed reducer/PC6-M5M-0.9 or equivalent (Appendix (5))	Maintenance parts (extra-cost)
06ACJ159*	Air filter element (CKD)/F1000-ELEMENT-ASSY (for the first step)	
06ACJ160*	Mist separator element (CKD)/M1000-MANTLE-ASSY (for the second step)	
06ACJ161*	Micro-mist separator element (CKD)/MX1000-MANTLE-ASSY (for the third step)	

* Replace the elements of 06ACJ159, 06ACJ160 and 06ACJ161 every year.
The replacement cycle differs depending on the usage and circumstances.
Note: For the maintenance method, confirm with the User's Manual supplied with the scale unit.

Structure and features of the assembly type linear scale (AT)

1. AT series detector joint mechanism
(Adoption of simple joint structure offering high rigidity)

The detector head and slider (sensor) of the scale unit are connected by the joint shown in the following figure. Because of this structure, if values are less than or equal to the scale mounting standard values, detector head mounting errors and parallelism differences between the scale unit and the machine guideway are absorbed, and normal operation is assured. Also, the simple and highly rigid structure provides superior durability.

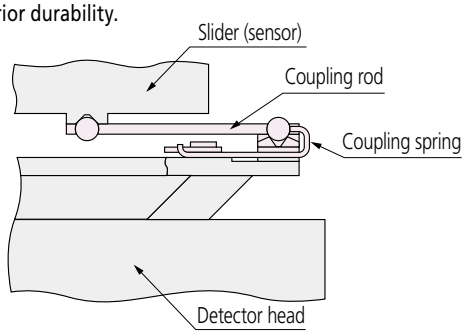

2. Advantage of special waterproof connectors

Adopting waterproof and oilproof connectors makes it possible to separate the signal cable. In turn, this makes installation and maintenance easy.

3. Signal cable conduit

Signal cables that are enclosed in a stainless-steel, spiral cover (conduit), for protection, are also available. The conduit will not rust or corrode, so these signal cables can be used over an extended period.

4. Adoption of rubber lip thrust method (Mitutoyo's proprietary technology)

The thrust part (see the following figure) pushes aside the rubber seal like a ship's keel pushes aside water.

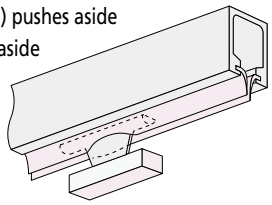

5. Adoption of specially formed urethane rubber lip with reinforcing wire

Resistance to oil and dust has been improved.

Note: Can be specially ordered for the **AT113** and **AT211**.

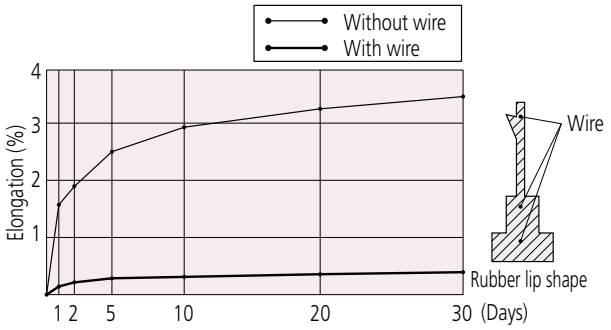

Elongation of dustproof rubber against coolant exposure

6. Maintenance of the dustproof rubber

To maintain the dustproof property of the rubber seal and extend its life, apply a small amount of good-quality silicone grease (such as G-30L made by Shin-Etsu Chemical Co, Ltd.) to the contacting area of the rubber and detector head once a year. (The maintenance interval will vary slightly according to the operating conditions of the scale.)

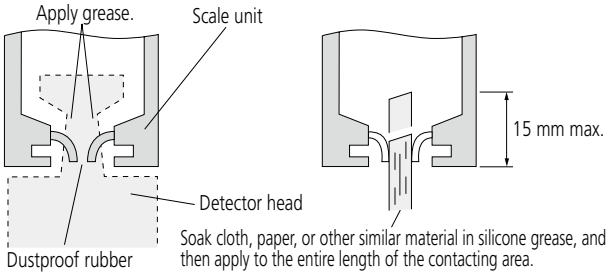

Durability of cables used with the linear scale

The life expectancy of the linear scale cables has been tested using the methods shown below.

Test method A

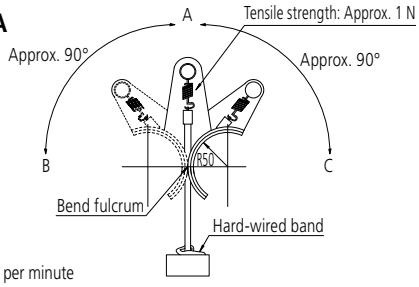

Test conditions

Bend angle: ±90°
Test speed: 30 times per minute
(For the number of bends, A, B, A, C, and then A represents one bend.)
Bend radius: R = 50 mm
Evaluation standard value: 3000000 times
(No breaks in the signal wires or shield)

Test method B

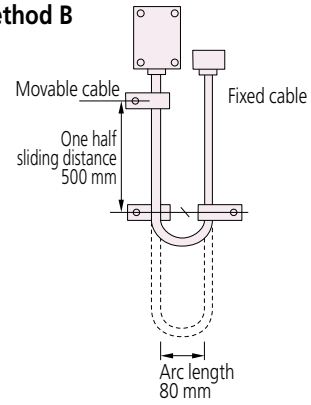

Test conditions

Bend radius: R = 40 mm
Speed: 2 m/s
Travel distance: 1000 mm

Scales	Test method	Signal cable*1 test result
AT100 Series	A	3 million times
AT211	A	
ST36	B	40 million times or more
ST700 Series	B	
ST1300 Series	B	
AT1100 Series	B	30 million times or more*2
AT1300 Series	B	

*1 Also including the head cable
*2 Testing still ongoing as of July 2020

Note 1: The test data stated above does not represent guaranteed values.
Depending on the bend conditions, the number of times that the cables can bend without failure may be less than indicated.
Note 2: When bending cables, the recommended bend radius is 100 mm or more.

Alarm functions

1. Detection of detector disconnection and short-circuit errors

Disconnection of and short circuits to 0 V of the phase A and phase B signal lines from the linear scale as well as other similar errors are detected.

2. Detection of excess response speed of detector feed (over-speed)

The feed speed of the linear scale (detector) exceeding the maximum feed speed as well as other similar errors are detected.

3. Detection of input signal errors

The amplitude voltage, DC voltage, or phase difference of the phase A and phase B signals from the linear scale being outside of the corresponding allowable range as well as other similar errors are detected.

4. Drop in line voltage

The line voltage supplied to the linear scale, PSU, and other devices (particularly devices that use a DC power supply) dropping below the allowable range is detected as an error.

5. Detection of momentary power failures

A momentary power failure or voltage drop greater than the allowable range occurring in the power supply that is being supplied to the PSU, counter, or other device (devices that use an AC power supply) is detected as an error.

6. Detection of scale errors

Errors that occur inside the linear scale are detected.

7. Detection of detector circuit errors

Errors caused by the incremental count or absolute count in absolute linear scales are detected.

8. Detection of CPU errors (detection of internal errors)

For linear scales, counters, and other devices that use CPUs, the CPU stopping operating normally is detected as an error.

Note: The alarm functions vary according to the product. For details, see the alarm functions available with each product. Also note that the allowable ranges used to detect alarms vary according to the product.

Alarm detection functions available with each product

(1) Alarm functions on the AT scales (sinusoida signal output type) + PSU-200

Scale code	Alarm function: Detected inside the scale		Alarm function: Detected inside the PSU		
	Scale error	Over-speed	Input signal error	Detection of scale errors	Disconnection or short circuit in signal cable
AT113	Yes				
PSU-200		Yes	Yes	Yes	Yes
PSU-250 Series		Yes	Yes	Yes	Yes

(2) Alarm functions on the AT scales (square wave signal output type)

Scale code	Alarm function: Detected inside the detector head (inside the I/F on the AT212)	
	Over-speed	Input signal error
AT211	Yes	Yes

(3) Alarm functions on the ST scales (sinusoidal signal output type) + PSU-200

Scale code	Alarm function: Detected inside the scale		Alarm function: Detected inside the PSU		
	Scale error	Over-speed	Input signal error	Detection of scale errors	Disconnection or short circuit in signal cable
ST36A	Yes				
PSU-200		Yes	Yes	Yes	Yes
PSU-250 Series		Yes	Yes	Yes	Yes

(4) Alarm functions on the ST scales (square wave signal output type)

Scale code	Alarm function: Detected inside the I/F		
	Over-speed	Input signal error	Disconnection or short circuit in signal cable
ST36	Yes	Yes	Yes
ST46-EZA	Yes	Yes	Yes

(5) Alarm functions on the absolute scales

Scale code	Alarm function: Detected inside the I/F				
	Scale error	Over-speed	Input signal error	Detector circuit error	CPU error
ABS ST700 Series	Yes	Yes	Yes	Yes	Yes
ABS ST1300 Series	Yes	Yes	Yes	Yes	Yes
ABS AT1300 Series	Yes	Yes	Yes	Yes	Yes
ABS AT1100 Series	Yes	Yes	Yes	Yes	Yes

Explanation of terms

Linear scale accuracy

(1) Linear scale indication accuracy
As shown in Figure 1, the accuracy of a linear scale is determined by comparing the positional value indicated by the linear scale with the reference value from a laser length measuring machine at regular intervals using the accuracy inspection system. The inspection environment temperature is 20°C, so the accuracy is at this temperature. The inspections are performed with other inspection conditions and standard values that comply with Mitutoyo's internal standards.

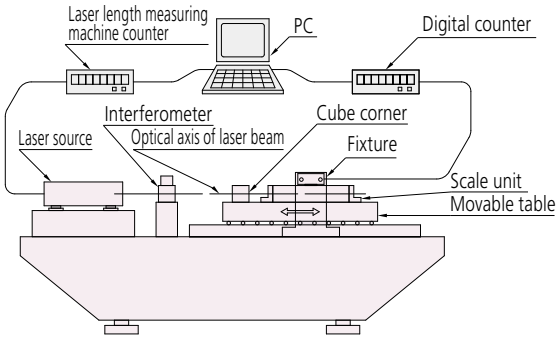

[Figure 1] Linear scale accuracy inspection device, overview

The accuracy (error) at each measured point is determined according to the following formula.

Error = reference value indicated by the laser length measuring machine – Corresponding value indicated by the linear scale

Here, the words "accuracy" and "error" have the same meaning.
We refer to the plot on a graph of the error at each measured point in the effective range as an accuracy chart.
Based on this accuracy chart, the accuracy of the linear scale is noted as the range between the maximum error and minimum error. There are the following two notation methods.

(1) Note the size of the range between the maximum error and minimum error as 'a'. The value 'a' shown in Figure 2-1 indicates the accuracy.
This standard value is indicated using the conversion formula ($\alpha + \beta$L) µm. Here, L is the effective range (in mm) and α and β are coefficients that are set on each model.
For example, for a linear scale with an accuracy standard value of (3 + 3L/1000) µm and an effective range L of 1000 mm, 'a' is 6 µm.

(2) Note the size of the range between the maximum error and minimum error as '±a/2'. The center value between the maximum error and minimum error is 0, the maximum value is noted as '+a/2', the minimum value is noted as '-a/2', and the size of the error range is noted as '±a/2'. This notation is mainly applied to ST scales.

In notations (1) and (2), 'a' in (1) and '±a/2' in (2) are the same accuracy standard value. Linear scales use a straight-line scale that has fixed-pitch graduations as the reference to detect the amount of movement and the amount of change in position. By detecting graduations, a linear scale obtains 2-phase sinusoidal signals that have the same pitch as the graduations. The linear scale is designed so that it can perform readings with greater detail than the straight-line scale by interpolating this sine wave signal with an electronic circuit. Interpolation means that these 2-phase sinusoidal signals are interpolated, and the result is divided into pulse signals corresponding to the resolution. For example, if the graduation pitch is 20 µm, readings can be performed with a resolution of 1 µm. Here, error within the graduation pitch range will occur according to the accuracy of this interpolation processing. This is called interpolation accuracy.
The accuracy standard value of a linear scale includes the aforementioned errors inspected at fixed intervals and interpolation accuracy.

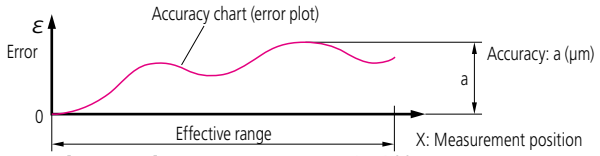

[Figure 2-1] Accuracy notation method (1)

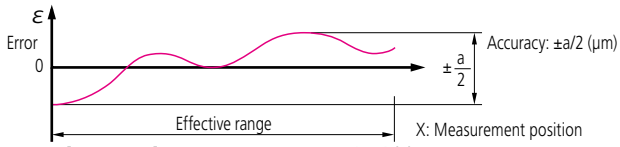

[Figure 2-1] Accuracy notation method (2)

Serial interface

This refers to a communication channel in which digital data is transmitted sequentially 1 bit at a time. While it has inferior real-time characteristics, the advantages are that it requires less wiring and has high reliability.
(This is the main communication method for feedback encoders.)

Line-driver output

This refers to signals that are output as square waves. A signal that has the inverted polarity of the output signal is generated, and the difference between these signals is set as the signal (differential signal output). This complies with EIA standards RS-422 and RS-485.

RS-422

This was standardized by the Electronic Industries Alliance (EIA) of the U.S. It is one of the balanced type serial communications standards, and it has excellent noise reducing characteristics. The maximum transmission speed is 10 Mbps, but limitations on the transmission speed arise as the cable length increases.

RS-485

This was standardized by the Electronics Industries Alliance (EIA) of the U.S. It is one of the balanced type serial communications standards, and it ranks higher than RS-422. RS-422 is upwardly compatible with this standard. While RS-422 is a communication standard that supports point-to-point, multi-drop connections, this standard supports bus type multi-point connections and bidirectional communications.

Minimum edge interval

This refers to the minimum time between a rising edge or falling edge of a square wave being output (or input) and the next edge being output (or input). For square wave output type linear scales, even with the same resolution, the shorter the minimum edge interval, the faster the response speed.

Thermal expansion coefficient

This refers to the thermal expansion of an object in response to a change in temperature, which is measured as elongation per unit length for each 1 °C increase in temperature of the material.

Full duplex communication (4 wire) and half duplex communication (2 wire)

Full duplex communication refers to a system in which devices (for example, a scale and a servo amplifier) each have two communication lines and can communicate with each other at the same time. On the other hand, half duplex communication refers to a system in which devices have a single communication line, so devices cannot communicate with each other at the same time, and communications can only be sent from a single device at any one time.

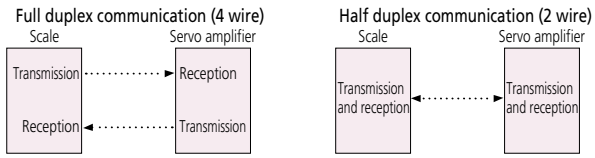

MEMO

385 2101(3)g-(D)PR-(JP8), Printed in Japan

Coordinate Measuring Machines
Vision Measuring Systems
Form Measurement
Optical Measuring
Sensor Systems
Test Equipment
Digital Scale and DRO Systems
Small Tool Instruments and Data Management

Find additional product literature and our product catalogue

https://www.mitutoyo.co.jp/global.html

**Our products are classified as regulated items under Japanese Foreign Exchange and Foreign Trade Law.
Please consult us in advance if you wish to export our products to any other country.
If the purchased product is exported, even though it is not a regulated item (Catch-All controls item), the customer service available for that product may be affected. If you have any questions, please consult your local Mitutoyo sales office.**

Note: Product illustrations are without obligation. Product descriptions, in particular any and all technical specifications, are only binding when explicitly agreed upon.
MITUTOYO and MiCAT are either registered trademarks or trademarks of Mitutoyo Corp. in Japan and/or other countries/regions.
Other product, company and brand names mentioned herein are for identification purposes only and may be the trademarks of their respective holders.

Mitutoyo Corporation
20-1, Sakado 1-Chome,
Takatsu-ku, Kawasaki-shi,
Kanagawa 213-8533, Japan
T +81 (0) 44 813-8230
F +81 (0) 44 813-8231
https://www.mitutoyo.co.jp

Mitutoyo

AMI
Automation and Metrology
1-888-354-2525
auto-met.com