Mitutoyo

Mitutoyo Quality

DIGITAL SCALE AND DRO SYSTEMS

LINEAR SCALE DRO SYSTEMS

Linear Scales, Counters, & DRO Retrofit Packages

Bulletin No. 2217 (4)

AMI
Automation and Metrology
8808 Tyler Blvd, Mentor, OH 44060
1-888-354-2525 | sales@auto-met.com
Request a quote: auto-met.com

Mitutoyo

Accurate and Affordable DRO System

Mitutoyo's Linear Scale Systems tightly couple linear scale units with dedicated digital readout (DRO) units in order to accurately detect and display displacements for machine tools, measuring tables, 3D printers, XY tables, or any application requiring measured lengths or accurate positioning. Packages are available for popular machine sizes or systems can be configured to best meet your specific application. Scale units have many measuring length ranges and the display units feature remote zero setting, switchable resolution and multipurpose one-touch macro keys. The Linear Scale System is easy to use and reliable, which can dramatically improve machining accuracy and efficiency.

Table of Contents

Scale Unit Selection Guide 3
AT715, ABSOLUTE and High Environmental Resistance Type 4
AT103, Standard-size Type 6
AT113, Slim Type 8
AT116, Slim and Economy Type 9
Display Unit Features 11
KA-200 Counter 12
Display Unit Functions 14
Milling Packages 16
Lathe Packages 18
Grinding Packages 20
Connecting to External Devices 22
Optional Accessories 24
Optional Adapters 28
Precautions when Mounting and Handling Linear Scales 30
Operating Principles 32
Scale Systems for Various Multi-axis Machine Tools 33
Applications 34

Features of the Linear Scale System

- Digital counter value display allows quick and accurate readout of displacement.
- Zero-setting or presetting possible at any position. Versatile functions eliminate calculations or complicated key operations for positioning.
- Various external output features allow output of current display values or various data to external devices such as PCs or PLCs. Easy data processing can be performed.
- Llinear scales and display units conform to CE marking standards.
- Mitutoyo actively promotes global environmental conservation. Our products do not have chemical content in excess of levels permitted in the RoHS Directive as prescribed in the EU. (As of May 2015)

Ultra Precision Manufacturing 11 Meters Underground

Mitutoyo Kiyohara Plant, which is a factory exclusively for the production of linear scales and other precision scales, has a complete system for producing master scales to be used in finished products, such as CMMs, vision measuring systems, profile projectors, and measuring microscopes. To improve the accuracy of scales and quality control technologies, the integral laboratory at the Kiyohara Plant was constructed eleven meters underground. It provides an optimal environment (cleanliness factor: 100) for the ultra-precision manufacture and evaluation of scales. Its unique design and construction isolates the laboratory from external vibrations and ensures minimal variations in temperature and humidity.

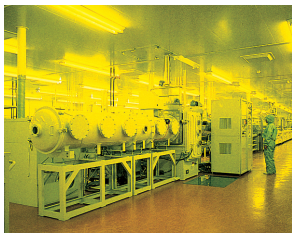

Scale Unit Selection Guide

AT715
Absolute Type

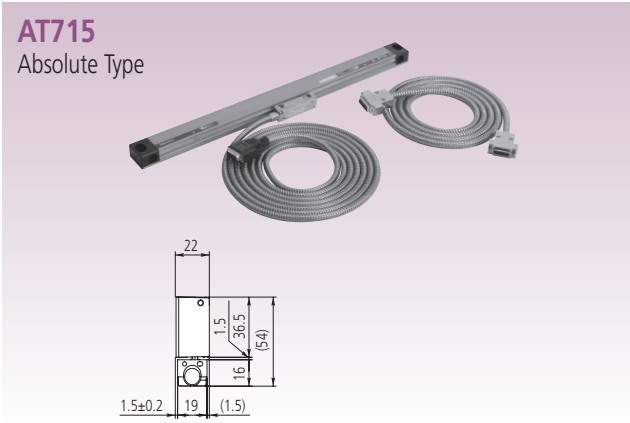

AT103
Standard-size Type

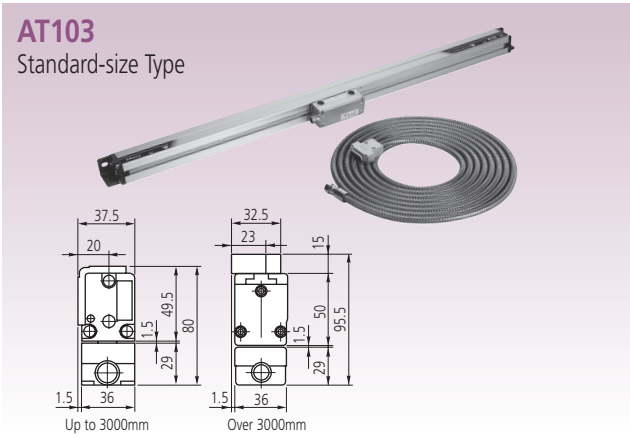

AT113
Slim Type

AT116
Economy and Slim Type

Specifications

Model	AT715	AT103	AT113, AT116
Measurement method	Electromagnetic induction system	Photoelectric (transparent linear encoder)	
Light source	—	LED	
Receptor	—	Phototransistor	
Output wave form	—	2-phase sine curves with a phase difference of 90°	
Max Resolution	.000020"(20µin)/0.5µm	.000005"(5µin)/0.1µm	
Effective length (for high-accuracy type)	100 - 3000mm	100 - 6000mm (100 - 2000mm)	100 - 1500mm (100 - 1500mm)
Accuracy* [high-accuracy type]	±5µm (Effective length: 100 - 500mm) ±7µm (Effective length: 600 - 1800mm) ±10µm (Effective length: 2000 - 3000mm)	$(5+5L_0/1000)$µm*1 [$(3+3L_0/1000)$µm]	$(5+5L_0/1000)$µm [$(3+3L_0/1000)$µm*2]
Maximum response speed	50m/min.	120m/min.*3	120m/min. (50m/min.: AT116)
Scale reference point	Absolute system	At every 50mm interval	
Linear expansion coefficient	—	$(8\pm1)\times10^{-6}$/°C	
Power supply	5V±5% DC	5V±5% DC	
Max, current consumption	70mA	70mA*4 (60mA: AT113, AT116)	
Operating temperature	0°C to 45°C		
Storage temperature	-20°C to 70°C		
Relative humidity	20 - 80%RH		
Head c able length	—	—	*6
Sliding force	5N or less	5N or less	
Single cable*5	Standard accessory (refer to individual specifications for the length)		
Dust/water protection level	IP67	IP53	

*1: $(5+8L_0/1000)$µm for models over 3250mm effective length *2: not available for AT116 *3: 50m/min. for models over 3250mm effective length *4: 140mA for models over 3250mm effective length
*5: Vinyl-coated type single cable and extension cable are available on request. *6: AT103:0.3m AT116: Without head cable

ABSOLUTE IP67 www.tuv.com TÜVRheinland ID:0000007295

- Dust- and watertight IP67

AT715, ABSOLUTE and High Environmental Resistance Type Using ABSOLUTE® Electromagnetic Induction System

Features

- Employs the ABSOLUTE® electromagnetic induction system* to achieve IP67 environmental resistance.
- Detects and outputs an absolute position - reference point setup not necessary every time unit is turned on.
- An abnormal calculation doesn't accumulate even if the calculation mistake is generated by electrical noise.
- Two mounting directions of the main scale unit allows easy mounting on a machine tool with difficult mounting arrangements.
- Resolution: down to .000020"(20µin)/0.5µm (selectable resolution per display)

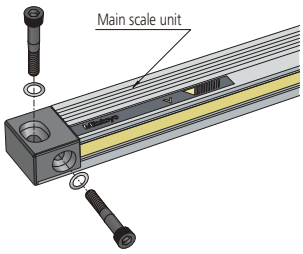

* Patent registered (Japan, USA, India, China, Germany, UK, France, Switzerland)

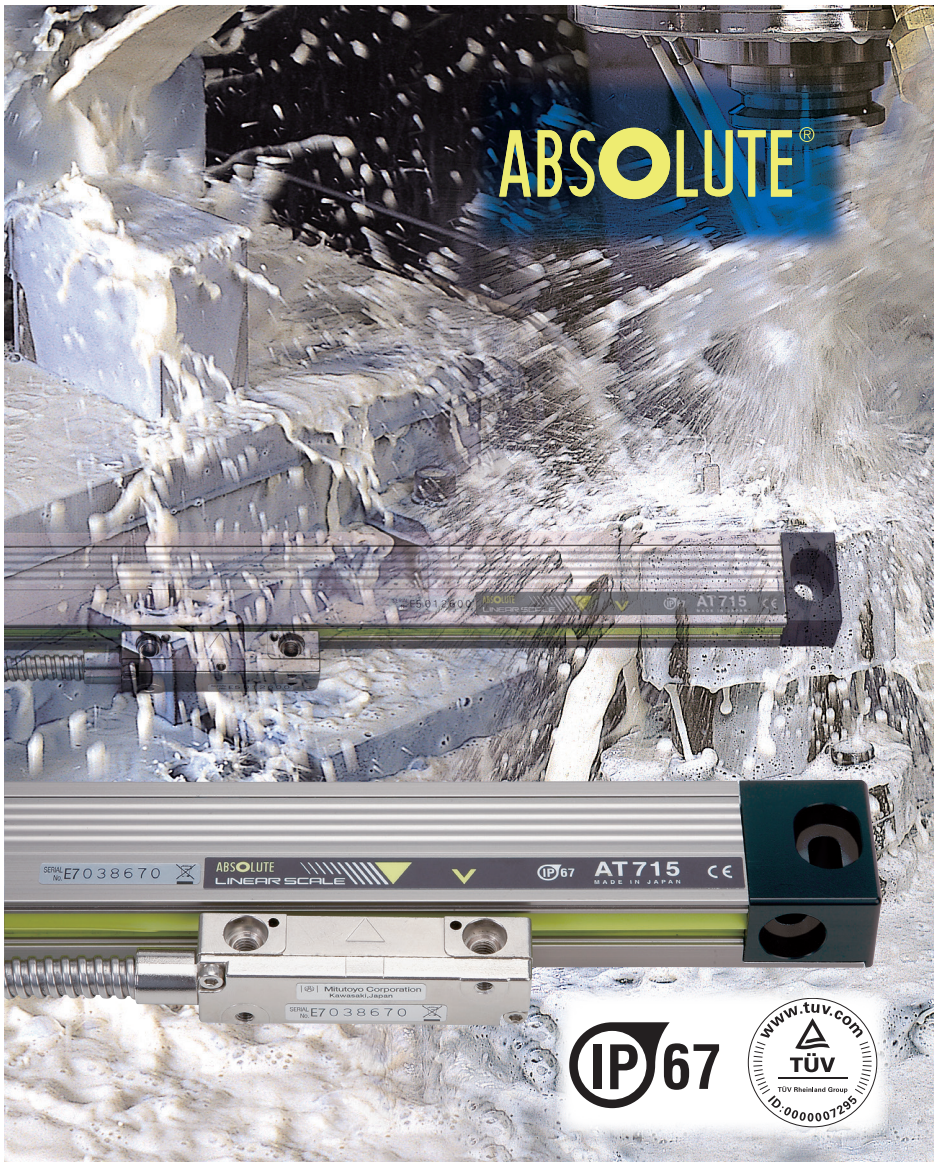

Extension cable*

Order No.	Cable length
09AAB674A	2m (6.5 feet)
09AAB674B	5m (16.4 feet)
09AAB674C	7m (22.9 feet)

Mounting parts (provided as standard)

Items included	• Hex-socket head screw (M6x25)	2 pcs.
	• Hex-socket head screw (M4x25)	2 pcs.
	• Hex-socket head screw (M4x8)	6 pcs.
	• Plain washer (6mm nominal)	2 pcs.
	• Plain washer (4mm nominal)	2 pcs.
	• Cable clip	6 pcs.
	• Spacer (0.3, 0.4, 0.5, 0.6mm)	1 pc. each

*: Max total length including the signal cable : 15m.

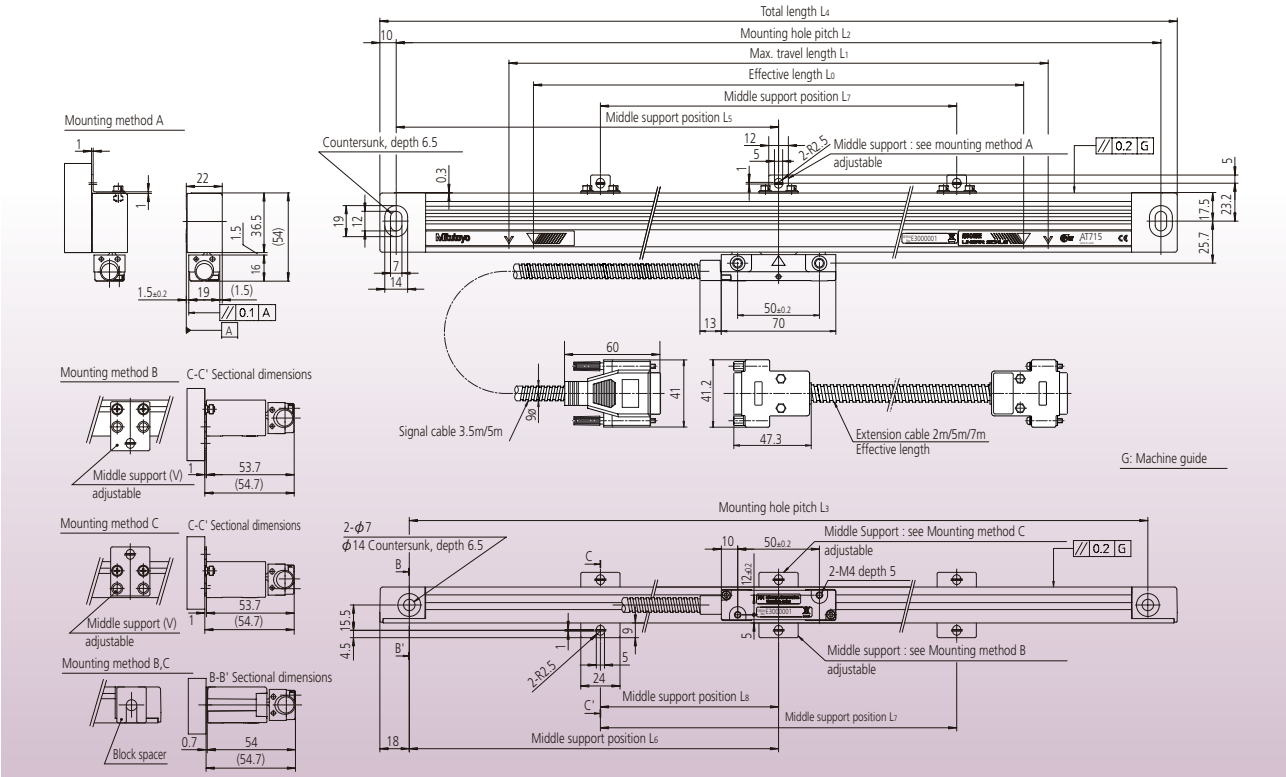

Order No. and mounting dimensions

mm (inch)

Order No. / Model No.	Effective length L_0	Maximum travel length L_1	Mounting hole pitch L_2	Mounting hole pitch L_3	Overall length L_4	Middle support positions L_5	L_6	L_7	Signal cable length
539-801R / AT715-100	100(4”)	120(4.72”)	258(10.16”)	242 (9.53”)	278(10.94”)	—	—	—	3500 (137.80)
539-802R / AT715-150	150(6”)	170(6.69”)	308(12.13”)	292 (11.50”)	328(12.91”)	—	—	—	
539-803R / AT715-200	200(8”)	220(8.66”)	358(14.09”)	342 (13.46”)	378(14.88”)	—	—	—	
539-804R / AT715-250	250(10”)	270(10.63”)	408(16.06”)	392 (15.43”)	428(16.85”)	—	—	—	
539-805R / AT715-300	300(12”)	330(12.99”)	468(18.43”)	452 (17.80”)	488(19.21”)	—	—	—	
539-806R / AT715-350	350(14”)	380(14.96”)	518(20.39”)	502 (19.76”)	538(21.18”)	—	—	—	
539-807R / AT715-400	400(16”)	430(16.93”)	568(22.36”)	552 (21.73”)	588(23.15”)	—	—	—	
539-808R / AT715-450	450(18”)	480(18.90”)	618(24.33”)	602 (23.70”)	638(25.12”)	—	—	—	
539-809R / AT715-500	500(20”)	540(21.26”)	678(26.69”)	662 (26.06”)	698(27.48”)	339(13.35”)	331(13.03”)	—	
539-811R / AT715-600	600(24”)	640(25.20”)	778(30.63”)	762 (30.00”)	798(31.42”)	389(15.31”)	381(15.00”)	—	
539-813R / AT715-700	700(28”)	740(29.13”)	878(34.57”)	862 (33.94”)	898(35.35”)	439(17.28”)	431(16.97”)	—	
539-814R / AT715-750	750(30”)	780(30.71”)	918(36.14”)	902 (35.51”)	938(36.93”)	459(18.07”)	451(17.76”)	—	
539-815R / AT715-800	800(32”)	840(33.07”)	978(38.50”)	962 (37.87”)	998(39.29”)	489(19.25”)	481(18.94”)	—	
539-816R / AT715-900	900(36”)	940(37.01”)	1078(42.44”)	1062 (41.81”)	1098(43.23”)	539(21.22”)	531(20.91”)	—	5000 (196.85)
539-817R / AT715-1000	1000(40”)	1040(40.94”)	1178(46.38”)	1162 (45.75”)	1198(47.17”)	589(23.19”)	581(22.87”)	—	
539-818R / AT715-1100	1100(44”)	1140(44.88”)	1278(50.31”)	1262 (49.69”)	1298(51.10”)	424(16.69”)	416(16.38”)	430(16.93”)	
539-819R / AT715-1200	1200(48”)	1240(48.82”)	1378(54.25”)	1362 (53.62”)	1398(55.04”)	459(18.07”)	451(17.76”)	460(18.11”)	
539-820R / AT715-1300	1300(52”)	1340(52.76”)	1478(58.19”)	1462 (57.56”)	1498(58.98”)	494(19.45”)	486(19.13”)	490(19.29”)	
539-821R / AT715-1400	1400(56”)	1440(56.69”)	1578(62.13”)	1562 (61.50”)	1598(62.91”)	524(20.63”)	516(20.31”)	530(20.87”)	
539-822R / AT715-1500	1500(60”)	1540(60.63”)	1678(66.06”)	1662 (65.43”)	1698(66.85”)	559(22.01”)	551(21.69”)	560(22.05”)	
539-823R / AT715-1600	1600(64”)	1640(64.57”)	1778(70.00”)	1762 (69.37”)	1798(70.79”)	459(18.07”)	451(17.76”)	430(16.93”)	
539-824R / AT715-1700	1700(68”)	1740(68.50”)	1878(73.94”)	1862 (73.31”)	1898(74.72”)	479(18.86”)	471(18.54”)	460(18.11”)	
539-825R / AT715-1800	1800(72”)	1840(72.44”)	1978(77.87”)	1962 (77.24”)	1998(78.66”)	459(18.07”)	451(17.76”)	530(20.87”)	
539-860R / AT715-2000	2000(80”)	2040(80.31”)	2178(85.75”)	2162 (85.12”)	2198(86.54”)	539(21.22”)	531(20.91”)	550(21.65”)	
539-861R / AT715-2200	2200(88”)	2240(88.19”)	2378(93.62”)	2362 (92.99”)	2398(94.41”)	469(18.46”)	461(18.15”)	480(18.90”)	
539-862R / AT715-2400	2400(96”)	2440(96.06”)	2578(101.50”)	2562 (100.87”)	2598(102.28”)	509(20.04”)	501(19.72”)	520(20.47”)	7000*1 (275.60)
539-863R / AT715-2500	2500(100”)	2540(100.00”)	2678(105.43”)	2662 (104.80”)	2698(106.22”)	529(20.83”)	521(20.51”)	540(21.26”)	
539-864R / AT715-2600	2600(104”)	2640(103.94”)	2778(109.37”)	2762 (108.74”)	2798(110.16”)	549(21.61”)	541(21.30”)	560(22.05”)	
539-865R / AT715-2800	2800(112”)	2840(111.81”)	2978(117.24”)	2962 (116.61”)	2998(118.03”)	489(19.25”)	481(18.94”)	500(19.69”)	
539-866R / AT715-3000	3000(120”)	3040(119.68”)	3178(125.12”)	3162 (124.49”)	3198(125.91”)	529(20.83”)	521(20.51”)	530(20.87”)	

*1: Signal cable length is the combination of built-in signal cable and extension cable (2m).

AT103, Standard-size Type

- Resolution: down to .000005"(5µin)/0.1µm

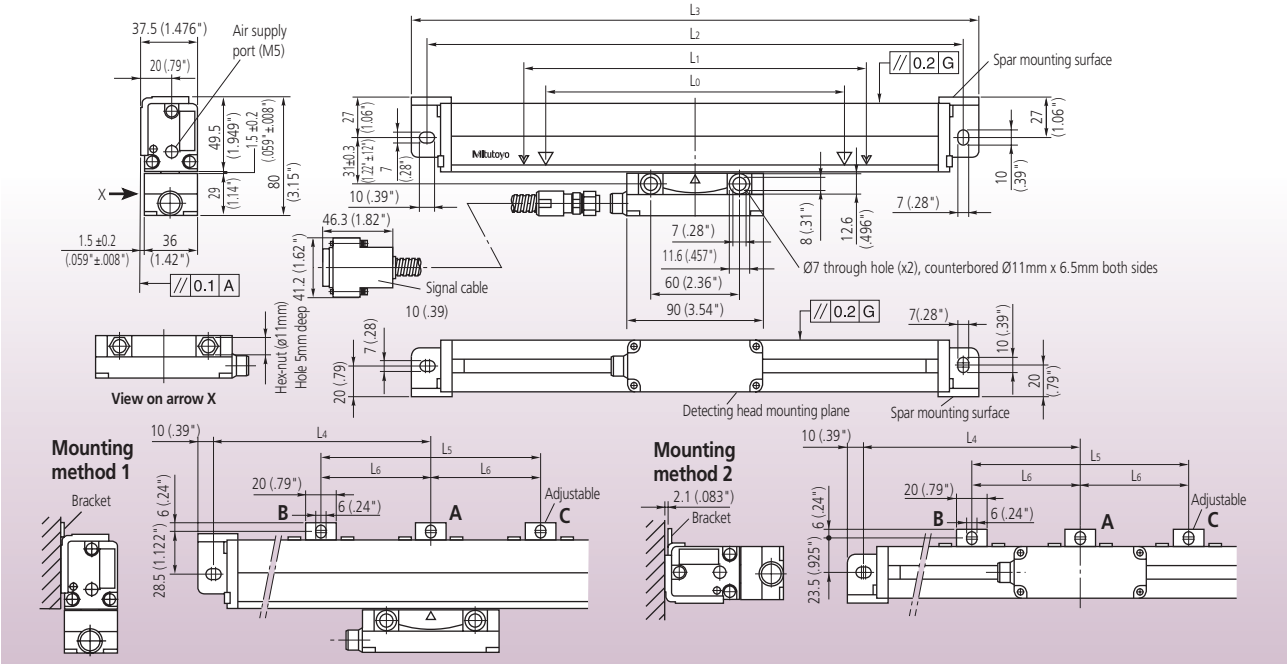

Order No. and mounting dimensions

mm (inch)

Order No. / Model No. ( ): suffix for high-accuracy type	Effective range L_0	Travel range L_1	Mount interval L_2	Overall length L_3	Supporting bracket position L_4	L_5	L_6	Signal cable length	Mass kg (lbs.)
539-133-30 (-40) / AT103-1600 (F)	1600 (64")	1690 (66.53")	1818 (71.57")	1838 (72.36")	—	610 (24.02")	—	5m (16.4 feet)	5.1 (11.22)
539-134-30 (-40) / AT103-1700 (F)	1700 (68")	1790 (70.47")	1918 (75.51")	1938 (76.30")	—	650 (25.59")	—	5m (16.4 feet)	5.3 (11.66)
539-135-30 (-40) / AT103-1800 (F)	1800 (72")	1890 (74.41")	2018 (79.45")	2038 (80.24")	—	670 (26.38")	—	5m (16.4 feet)	5.5 (12.10)
539-136-30 (-40) / AT103-2000 (F)	2000 (80")	2100 (82.67")	2228 (87.72")	2248 (88.50")	—	740 (29.13")	—	5m (16.4 feet)	6.0 (13.20)
539-137-30 / AT103-2200	2200 (88")	2300 (90.55")	2428 (95.59")	2448 (96.38")	—	800 (31.50")	—	5m (16.4 feet)	6.4 (14.08)
539-138-30 / AT103-2400	2400 (96")	2500 (98.42")	2628 (103.46")	2648 (104.25")	1314 (51.73")	1300 (51.18")	650 (25.59")	7m (22.9 feet)	7.1 (15.62)
539-139-30 / AT103-2500	2500 (100")	2600 (102.36")	2728 (107.40")	2748 (108.19")	1364 (53.70")	1340 (52.76")	670 (25.38")	7m (22.9 feet)	7.3 (16.06)
539-140-30 / AT103-2600	2600 (104")	2700 (106.30")	2828 (111.34")	2848 (112.13")	1414 (55.67")	1400 (55.12")	700 (27.56")	7m (22.9 feet)	7.5 (16.50)
539-141-30 / AT103-2800	2800 (112")	2900 (114.17")	3028 (119.21")	3048 (120.00")	1514 (59.60")	1500 (59.06")	750 (29.53")	7m (22.9 feet)	7.9 (17.38)
539-142-30 / AT103-3000	3000 (122")	3100 (122.04")	3228 (127.09")	3248 (127.87")	1614 (63.99")	1600 (62.99")	800 (31.50")	7m (22.9 feet)	8.3 (18.26)

Note) When selecting the size of a scale unit for your application, make sure that the maximum travel range of the scale unit (L_1) is larger than the maximum travel range of the machine. Also, take into consideration selecting a size that the accuracy of the scale unit is guaranteed only within the range of the effective measuring length (L_0).

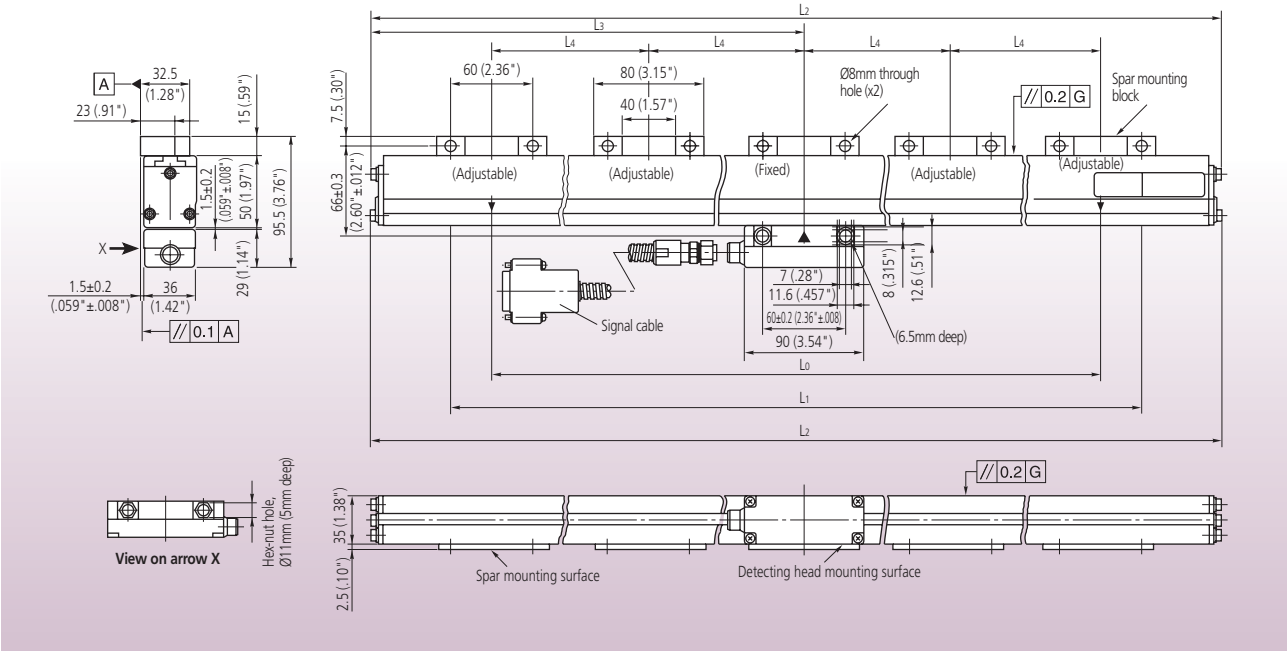

Order No. and mounting dimensions

mm (inch)

Order No. / Model No.	Effective range L_0	Travel range L_1	Overall length L_2	Supporting bracket position L_3	Supporting bracket position L_4	Signal cable length	Mass kg (lbs.)
539-143-30 / AT103-3250	3250 (130")	3350 (131.88")	3464 (136.38")	1725 (67.91")	800 (31.50")	10m (32.8 feet)	10.8 (23.76)
539-144-30 / AT103-3500	3500 (140")	3600 (141.73")	3714 (146.22")	1850 (72.83")	850 (33.46")	10m (32.8 feet)	11.4 (25.08)
539-145-30 / AT103-3750	3750 (150")	3850 (151.57")	3964 (156.06")	1975 (77.76")	930 (36.61")	10m (32.8 feet)	12.0 (26.40)
539-146-30 / AT103-4000	4000 (160")	4100 (161.42")	4214 (165.91")	2100 (82.68")	1000 (39.37")	10m (32.8 feet)	12.6 (27.72)
539-147-30 / AT103-4250	4250 (170")	4350 (171.26")	4464 (175.75")	2225 (87.60")	1050 (41.34")	10m (32.8 feet)	13.2 (29.04)
539-148-30 / AT103-4500	4500 (180")	4600 (181.10")	4714 (185.59")	2350 (92.52")	1100 (43.31")	10m (32.8 feet)	13.8 (30.36)
539-149-30 / AT103-4750	4750 (190")	4850 (191.94")	4964 (195.43")	2475 (97.44")	800 (31.50")	15m (49.2 feet)	15.2 (33.44)
539-150-30 / AT103-5000	5000 (200")	5100 (200.78")	5214 (205.28")	2600 (102.36")	830 (32.68")	15m (49.2 feet)	15.8 (34.76)
539-151-30 / AT103-5250	5250 (210")	5350 (210.63")	5464 (215.12")	2725 (107.28")	870 (34.25")	15m (49.2 feet)	16.4 (36.08)
539-152-30 / AT103-5500	5500 (220")	5600 (220.47")	5714 (224.96")	2850 (112.20")	910 (35.83")	15m (49.2 feet)	17.0 (37.40)
539-153-30 / AT103-5750	5750 (230")	5850 (230.31")	5964 (234.80")	2975 (117.13")	950 (37.40")	15m (49.2 feet)	17.6 (38.72)
539-154-30 / AT103-6000	6000 (240")	6100 (240.16")	6214 (244.65")	3100 (122.05")	1000 (39.37")	15m (49.2 feet)	18.2 (40.04)

Note) When selecting the size of a scale unit for your application, make sure that the maximum travel range of the scale unit (L_1) is larger than the maximum travel range of the machine. Also, take into consideration in selecting a size that the accuracy of the scale unit is guaranteed only within the range of the effective measuring length (L_0).

Extension cables

Order No.	Cable length
09AAA033A	2m (6.5 feet)
09AAA033B	5m (16.4 feet)
09AAA033C	7m (22.9 feet)

Mounting parts (provided as standard)

Type of spar	Standard size		Extra-long	
Effective range L_0	1600mm (64") - 3000mm (120")		3250mm (130") - 6000mm (240")	
Items included	• Hex-socket head screw (M6x1x40)	2 pcs.	• Hex-socket head screw (M6x1x40)	2 pcs.
	• Hex-socket head screw (M6x1x16)	2 pcs.	• Hex-socket head screw (M6x1x30)	14 pcs.
	• Hex-socket head screw (M4x0.7x8)	6 pcs.	• Hex-socket head screw (M4x0.7x8)	7 pcs.
	• Spring washer (6mm nominal)	2 pcs.	• Spring washer (6mm nominal)	14 pcs.
	• Plain washer (6mm nomina)	2 pcs.	• Plain washer (6mm nomina)	14 pcs.
	• Cable clip	5 pcs.	• Cable clip	7 pcs.
	• Spacer (0.3mm)	1 pc.	• Spacer (0.3mm)	1 pc.
	• Spacer (0.4mm)	1 pc.	• Spacer (0.4mm)	1 pc.
	• Spacer (0.5mm)	1 pc.	• Spacer (0.5mm)	1 pc.
	• Spacer (0.6mm)	1 pc.	• Spacer (0.6mm)	1 pc.

Remarks: Dust-proofing and splash-proofing of the AT103 model scale units can be improved by supplying clean and dry air to the main spar.
(Air pressure required: 50kPa, Air flow rate: 10 to 20 liters per minute)

AT113, Slim Type

- Resolution: down to .000005"(5µin)/0.1µm

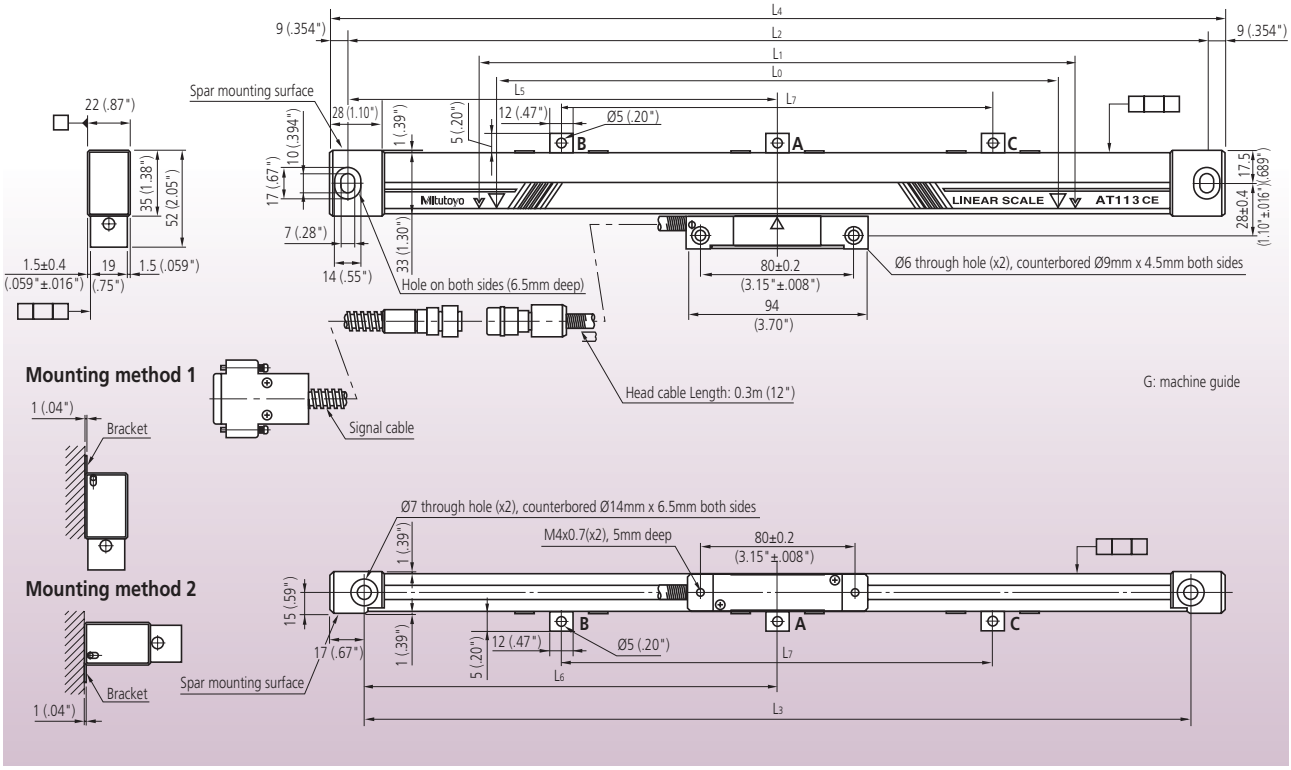

Order No. and mounting dimensions

mm (inch)

Order No. / Model No. ( ): suffix for high accuracy type	Effective range L_0	Travel range L_1	Mount interval L_2	Mount interval L_3	Overall length L_4	Supporting bracket position L_5	L_6	L_7	Signal cable length	Mass kg (lbs.)
539-201-30 (-40) / AT113-100 (F)	100 (4")	120 (4.72")	258 (10.16")	242 (9.53")	276 (10.87")	—	—	—	3m (9.8 feet)	0.9 (1.98)
539-202-30 (-40) / AT113-150 (F)	150 (6")	170 (6.69")	308 (12.13")	292 (11.50")	326 (12.83")	—	—	—	3m (9.8 feet)	0.9 (1.98)
539-203-30 (-40) / AT113-200 (F)	200 (8")	220 (8.66")	358 (14.09")	342 (13.46")	376 (14.80")	—	—	—	3m (9.8 feet)	0.9 (1.98)
539-204-30 (-40) / AT113-250 (F)	250 (10")	270 (10.63")	408 (16.06")	392 (15.43")	426 (16.77")	—	—	—	3m (9.8 feet)	1.0 (2.2)
539-205-30 (-40) / AT113-300 (F)	300 (12")	330 (12.99")	468 (18.43")	452 (17.80")	486 (19.13")	—	—	—	3m (9.8 feet)	1.0 (2.2)
539-206-30 (-40) / AT113-350 (F)	350 (14")	380 (14.96")	518 (20.39")	502 (19.76")	536 (21.10")	—	—	—	3m (9.8 feet)	1.1 (2.42)
539-207-30 (-40) / AT113-400 (F)	400 (16")	430 (16.93")	568 (22.36")	552 (21.73")	586 (23.07")	—	—	—	3m (9.8 feet)	1.1 (2.42)
539-208-30 (-40) / AT113-450 (F)	450 (18")	480 (18.90")	618 (24.33")	602 (23.70")	636 (25.04")	—	—	—	3m (9.8 feet)	1.1 (2.42)
539-209-30 (-40) / AT113-500 (F)	500 (20")	540 (21.26")	678 (26.69")	662 (26.06")	696 (27.40")	339 (13.35")	331 (13.03")	—	3m (9.8 feet)	1.2 (2.64)
539-211-30 (-40) / AT113-600 (F)	600 (24")	640 (25.20")	778 (30.63")	762 (30.00")	796 (31.34")	389 (15.31")	381 (15.00")	—	3m (9.8 feet)	1.3 (2.86)
539-213-30 (-40) / AT113-700 (F)	700 (28")	740 (29.13")	878 (34.57")	862 (33.94")	896 (35.28")	439 (17.28")	431 (16.97")	—	3m (9.8 feet)	1.3 (2.86)
539-214-30 (-40) / AT113-750 (F)	750 (30")	780 (30.71")	918 (36.14")	902 (35.51")	936 (36.85")	459 (18.07")	451 (17.76")	—	3m (9.8 feet)	1.4 (3.08)
539-215-30 (-40) / AT113-800 (F)	800 (32")	840 (33.07")	978 (38.50")	962 (37.87")	996 (39.21")	489 (19.25")	481 (18.94")	—	3m (9.8 feet)	1.4 (3.08)
539-216-30 (-40) / AT113-900 (F)	900 (36")	940 (37.01")	1078 (42.44")	1062 (41.81")	1096 (43.15")	539 (21.22")	531 (20.91")	—	3m (9.8 feet)	1.5 (3.3)
539-217-30 (-40) / AT113-1000 (F)	1000 (40")	1040 (40.94")	1178 (46.38")	1162 (45.75")	1196 (47.09")	589 (23.19")	581 (22.87")	—	5m (16.4 feet)	1.9 (4.18)
539-218-30 (-40) / AT113-1100 (F)	1100 (44")	1140 (44.88")	1278 (50.31")	1262 (49.69")	1296 (51.02")	—	—	430 (16.93")	5m (16.4 feet)	1.9 (4.18)
539-219-30 (-40) / AT113-1200 (F)	1200 (48")	1240 (48.82")	1378 (54.25")	1362 (53.62")	1396 (54.96")	—	—	460 (18.11")	5m (16.4 feet)	2.0 (4.4)
539-220-30 (-40) / AT113-1300 (F)	1300 (52")	1340 (52.76")	1478 (58.19")	1462 (57.56")	1496 (58.90")	—	—	490 (19.29")	5m (16.4 feet)	2.1 (4.62)
539-221-30 (-40) / AT113-1400 (F)	1400 (56")	1440 (56.69")	1578 (62.13")	1562 (61.50")	1596 (62.83")	—	—	530 (20.87")	5m (16.4 feet)	2.2 (4.84)
539-222-30 (-40) / AT113-1500 (F)	1500 (60")	1540 (60.63")	1678 (66.06")	1662 (65.43")	1696 (66.77")	—	—	560 (22.05")	5m (16.4 feet)	2.2 (4.84)

Note) When selecting the size of a scale unit for your application, make sure that the maximum travel range of the scale unit (L_1) is larger than the maximum travel range of the machine. Also, take into consideration in selecting a size that the accuracy of the scale unit is guaranteed only within the range of the effective measuring length (L_0).

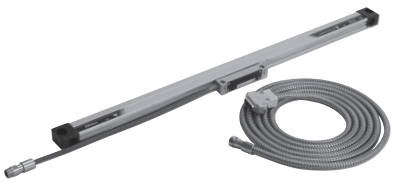

Extension cables

Order No.	Cable length
09AAA033A	2m (6.5 feet)
09AAA033B	5m (16.4 feet)
09AAA033C	7m (22.9 feet)

Mounting parts (provided as standard)

Items included	• Hex-socket head screw (M6x1x25)	2 pcs.
	• Hex-socket head screw (M4x0.7x25)	2 pcs.
	• Hex-socket head screw (M4x0.7x8)	6 pcs.
	• Spring washer (4mm nominal)	2 pcs.
	• Plain washer (4mm nomina)	2 pcs.
	• Cable clip	5 pcs.
	• Connector clamp	1 pc.
	• Spacer (0.3mm)	1 pc.
	• Spacer (0.4mm)	1 pc.
	• Spacer (0.5mm)	1 pc.
	• Spacer (0.6mm)	1 pc.

AT116, Slim and Economy Type

• Resolution: down to .000005"(5µin)/0.1µm

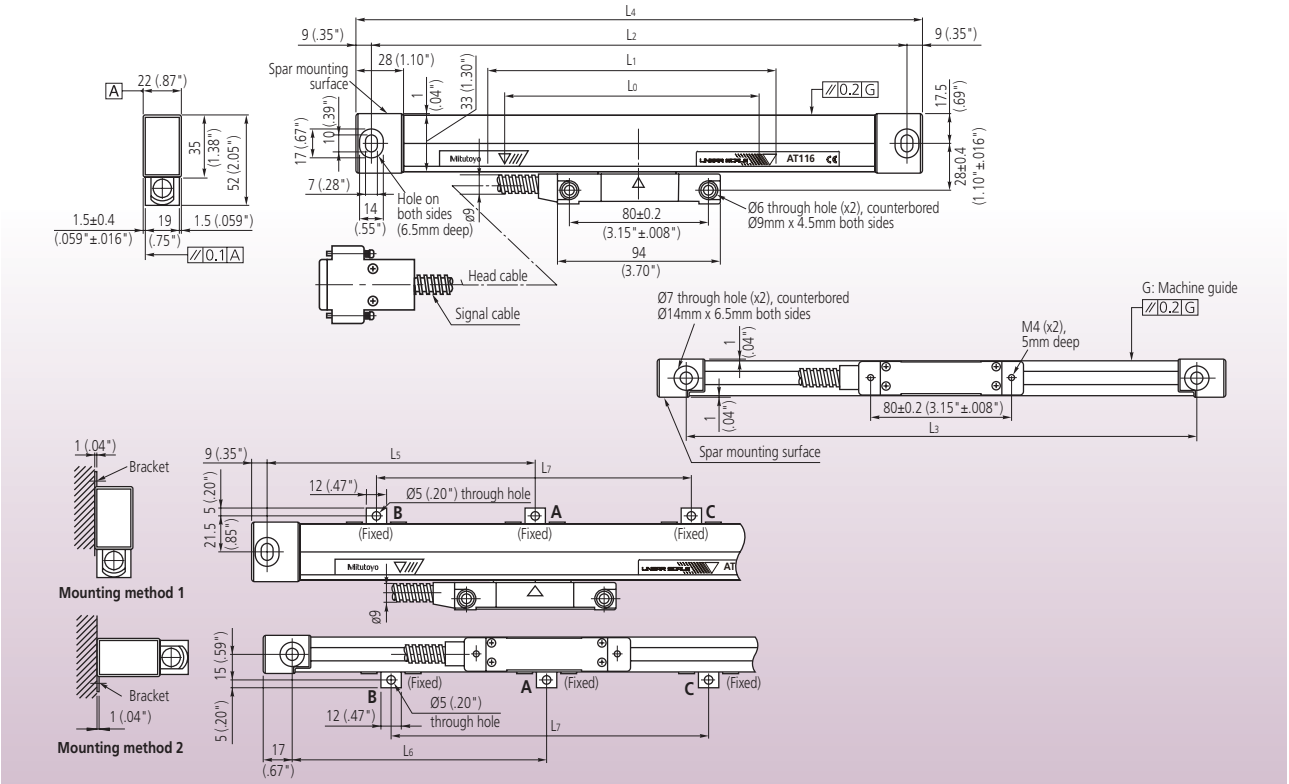

Order No. and mounting dimensions

mm (inch)

Order No. / Model No.	Effective range L_0	Travel range L_1	Mount interval L_2	Mount interval L_3	Overall length L_4	Supporting bracket position L_5	L_6	L_7	Head cable length	Mass kg (lbs.)
539-271-30R / AT116-100	100 (4")	120 (4.72")	258 (10.16")	242 (9.53")	276 (10.87")	—	—	—	3.5m (9.8 feet)	0.5 (1.1)
539-272-30R / AT116-150	150 (6")	170 (6.69")	308 (12.13")	292 (11.50")	326 (12.83")	—	—	—	3.5m (9.8 feet)	0.6 (1.32)
539-273-30R / AT116-200	200 (8")	220 (8.66")	358 (14.09")	342 (13.46")	376 (14.80")	—	—	—	3.5m (9.8 feet)	0.7 (1.54)
539-274-30R / AT116-250	250 (10")	270 (10.63")	408 (16.06")	392 (15.43")	426 (16.77")	—	—	—	3.5m (9.8 feet)	0.8 (1.76)
539-275-30R / AT116-300	300 (12")	330 (12.99")	468 (18.43")	452 (17.80")	486 (19.13")	—	—	—	3.5m (9.8 feet)	0.9 (1.98)
539-276-30R / AT116-350	350 (14")	380 (14.96")	518 (20.39")	502 (19.76")	536 (21.10")	—	—	—	3.5m (9.8 feet)	1.0 (2.2)
539-277-30R / AT116-400	400 (16")	430 (16.93")	568 (22.36")	552 (21.73")	586 (23.07")	—	—	—	3.5m (9.8 feet)	1.1 (2.42)
539-278-30R / AT116-450	450 (18")	480 (18.90")	618 (24.33")	602 (23.70")	636 (25.04")	—	—	—	3.5m (9.8 feet)	1.2 (2.64)
539-279-30R / AT116-500	500 (20")	540 (21.26")	678 (26.69")	662 (26.06")	696 (27.40")	339 (13.35")	331 (13.03")	—	3.5m (9.8 feet)	1.3 (2.86)
539-281-30R / AT116-600	600 (24")	640 (25.20")	778 (30.63")	762 (30.00")	796 (31.34")	389 (15.31")	381 (15.00")	—	3.5m (9.8 feet)	1.4 (3.08)
539-283-30R / AT116-700	700 (28")	740 (29.13")	878 (34.57")	862 (33.94")	896 (35.28")	439 (17.28")	431 (16.97")	—	3.5m (9.8 feet)	1.6 (3.52)
539-284-30R / AT116-750	750 (30")	780 (30.71")	918 (36.14")	902 (35.51")	936 (36.85")	459 (18.07")	451 (17.76")	—	3.5m (9.8 feet)	1.7 (3.74)
539-285-30R / AT116-800	800 (32")	840 (33.07")	978 (38.50")	962 (37.87")	996 (39.21")	489 (19.25")	481 (18.94")	—	3.5m (9.8 feet)	1.8 (3.96)
539-286-30R / AT116-900	900 (36")	940 (37.01")	1078 (42.44")	1062 (41.81")	1096 (43.15")	539 (21.22")	531 (20.91")	—	3.5m (9.8 feet)	2.0 (4.4)
539-287-30R / AT116-1000	1000 (40")	1040 (40.94")	1178 (46.38")	1162 (45.75")	1196 (47.09")	589 (23.19")	581 (22.87")	—	5m (16.4 feet)	2.3 (5.06)
539-288-30R / AT116-1100	1100 (44")	1140 (44.88")	1278 (50.31")	1262 (49.69")	1296 (51.02")	—	—	430 (16.93")	5m (16.4 feet)	2.5 (5.5)
539-289-30R / AT116-1200	1200 (48")	1240 (48.82")	1378 (54.25")	1362 (53.62")	1396 (54.96")	—	—	460 (18.11")	5m (16.4 feet)	2.7 (5.94)
539-290-30R / AT116-1300	1300 (52")	1340 (52.76")	1478 (58.19")	1462 (57.56")	1496 (58.90")	—	—	490 (19.29")	5m (16.4 feet)	2.9 (6.38)
539-291-30R / AT116-1400	1400 (56")	1440 (56.69")	1578 (62.13")	1562 (61.50")	1596 (62.83")	—	—	530 (20.87")	5m (16.4 feet)	3.1 (6.82)
539-292-30R / AT116-1500	1500 (60")	1540 (60.63")	1678 (66.06")	1662 (65.43")	1696 (66.77")	—	—	560 (22.05")	5m (16.4 feet)	3.2 (7.04)

Note) When selecting the size of a scale unit for your application, make sure that the maximum travel range of the scale unit (L_1) is larger than the maximum travel range of the machine. Also, take into consideration in selecting a size that the accuracy of the scale unit is guaranteed only within the range of the effective measuring length (L_0).

Extension cables

Order No.	Cable length
09AAB674A	2m (6.5 feet)
09AAB674B	5m (16.4 feet)
09AAB674C	7m (22.9 feet)

Mounting parts (provided as standard)

Items included	• Hex-socket head screw (M6x1x25)	2 pcs.
	• Hex-socket head screw (M4x0.7x25)	2 pcs.
	• Hex-socket head screw (M4x0.7x8)	6 pcs.
	• Plain washer (6mm nominal)	2 pcs.
	• Plain washer (4mm nomina)	2 pcs.
	• Connector clamp	6 pc.
	• Spacer (0.3mm)	1 pc.
	• Spacer (0.4mm)	1 pc.
	• Spacer (0.5mm)	1 pc.
	• Spacer (0.6mm)	1 pc.

Mitutoyo

KA-200 Counter

Multiple feature, intuitive display

FEATURES

- Absolute and Incremental modes (9 presets each)
- Calculator function
- Segmented and Linear Error Compensation
- Can be used as a standard counter or a lathe counter by modifying parameters.
- Larger sub display for easy operation.
- Data can be sent directly into spreadsheets using the optional code out unit (09AET993).
- RS-232C data can be output to a PC, printer or PLC using the optional code out unit (09AET993)

Standard Accessories

02ZAA010: 1.8m AC cable (USA, Canada)
06AEU075: Dust-proof cover
09CAA985: GND lead wire (4m)
06AEU080: Seal set (1 pc.)
06AFC149: D-SUB15P Connector cap
99MBE083A: User's Manual (1 set)

Optional Accessories

06AET993: Code out unit
937179T: Foot switch for measurement data output (USB interface)
64AAB336 Foot switch to trigger RS-232C (direct)
64AAB519 RS232C output cable 6-ft. (25-9 pin)
965004 Foot switch to trigger RS-232C (use w/06ACF941)
06ACF941: External extension cable
937328 External load box
936553 External zero box
06ACB393 Adapter for linear gages with origin
06ACB913 Adapter for linear gages without origin
06ACB391 Adapter for AT211 linear scales
06ACB392 Adapter for ST Series
09CAB231 Adapter for micrometer head
09AAA207 Adapter for previous model 6 pin linear scales
09EAA094 Counter cable RS232C for DP-1VA

174-183A (for 1-axis or 2-axis application)

174-185A (for 3-axis application)

SPECIFICATIONS

Model	KA-200 Counter	
Order No.	**174-183A**	**174-185A**
Resolution	With AT100: .01"-.000005" (0.1- 0.0001mm) With AT715: .01"- .000020"(0.1 - 0.0005mm)	
Scale input ports	2	3
Display type / digit	7-segment, 8-digit + sign + 8-character alphabet LED	
Output (optional)	RS-232C / USB	
Macro functions	Rectangular drilling and round milling newly added	
Main features	Feed speed display; taper machining function; tool data; multipoint compensation; scale check function; calculator function	
Dimensions	Size (W×D×H) 30×168×70mm	

DIMENSIONS

Unit: mm

Front view

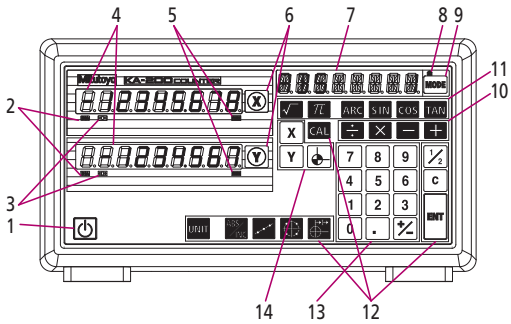

Rear view

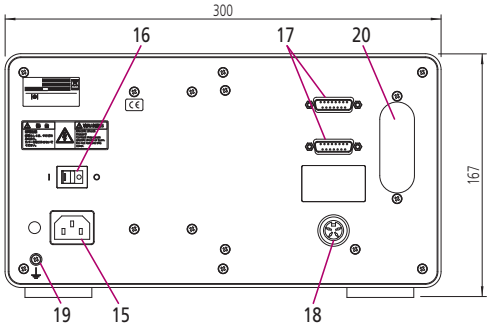

1: Display ON/OFF switch
2: DIA
3: Scaling
4: Main display
5: Count value unit
6: Zero reset key
7: Sub-display
8: Lock
9: MODE key
10: Four arithmetic operation keys
11: Trigonometric function keys
12: Function keys
13: Numeric keypad
14: Axis/coordinates selection key
15: AC inlet
16: Main switch
17: Linear scale input connectors
18: Output trigger touch probe connector
19: Ground terminal
20: Interface unit fixing section

USB Output

A KA-series counter can output measurement values as USB text data in combination with the optional code output unit and foot switch. These numeric values can be imported to applications such as Excel.

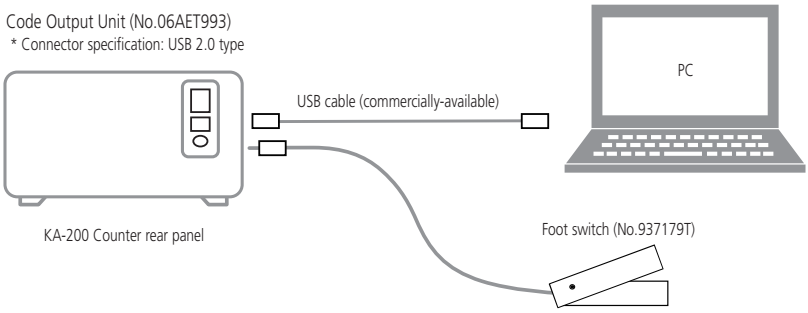

Functions

Function	Counter	KA-200 Counter
Zero-setting	ZERO	●
Preset	P.SET	●
Resolution setting	0.0005 / 0.1	●
Measurement direction setting		●
mm/inch conversion	mm/E	●
Diameter display	DIA	●
Scale reference point setting-1	SET	●
1/2 calculation	1/2	●
Coordinate system switching	N	●
Bolt-hole circle machining		●-2
Pitch machining		●
Zero approach machining (INC mode)		●
Addition of 2-scale data	Z1+Z2	●-3
Linearity error compensation		●
Pitch error compensation		●-1
Smoothing	1234	●
Memory backup		●
Expansion/contraction coefficient setting		—
Lower digit blanking out	123	●
External zero-setting	ZERO SET IN PUT	▲-4
RS-232C interface unit	RS-232C OUTPUT	▲-4
USB output	USB	▲-5
Limit signal output	LIMIT OUTPUT	—
Error message	Error	●

●: Standard function, ▲: Optional function, —: Not available
-1: Only available when connecting with AT100 series.
-2: Not available in single-axis use
-3: Only available for 3-axis model
-4: Code out unit (**06AET993**) is required.
-5: Text can be output by interface unit and foot switch

Display Unit Functions

BASIC FUNCTIONS

Zero-setting
The display can be set to "0" (zero) at any scale position.

Preset
This function allows the user to enter a numeric value on the counter display. Any preset value can be retrieved whenever necessary.

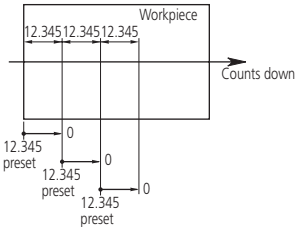

Measurement direction setting
The measurement direction can be selected.

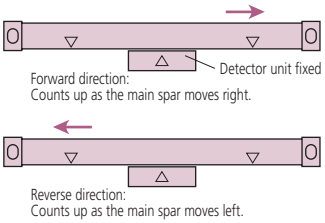

Lower digit blanking out
Unnecessary lower digits (up to 9 digits of the lowest digits) can be blanked out.

1/2 calculation
This function halves the display value.

mm/inch conversion
The counting unit can be changed between mm and inch (or between mm and E (=1/25.4mm) depending on the model.)

Resolution setting
The most suitable resolution can be selected to meet measuring applications. Available resolutions depend on the counter to be used.

Absolute/incremental coordinate system switching
For each axis, the measured value can be obtained in either absolute (ABS) or incremental (INC) coordinates. This function is useful, for example, if the following operation is performed. Set the datum point for a workpiece in the absolute mode. Then, after performing zero setting, presetting, etc., in the incremental mode, return to the absolute mode. In this way the absolute distance from the datum point can be easily displayed.

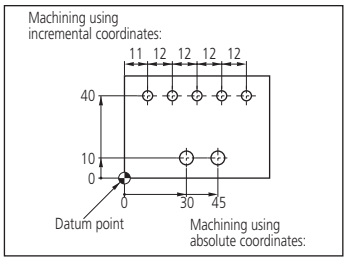

SPECIAL FUNCTIONS

Linear error compensation
Machine errors caused due to workpiece weight, inaccurate table adjustment, etc., are linearly compensated to reduce the positioning error.

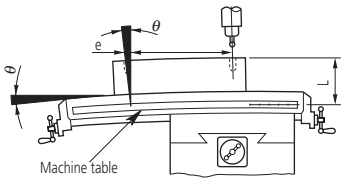

Display value backup
The displayed value at power-off is preserved in memory and restored at the next power-on.
When an AT715 scale is connected to the counter, the stored display value is corrected appropriately if the detector head is moved during power off so that the display always shows the correct displacement from the origin.

Smoothing function
Turning on smoothing slows display updating to enable the display to be read more easily when a measurement value is rapidly oscillating due to machine vibration. Measurement speed remains unaffected.

Expansion/contraction coefficient setting
This function multiplies the actual counter measurements by a constant factor. This is useful in, for example, mold manufacture by allowing the mold to be machined to the actual molded component dimensions directly, without having to increase the machining dimensions manually to allow for material shrinkage after molding. Tedious work can thus be reduced and the risk of mistakes in calculation eliminated.

Parameter all clear
Clears the setup parameter data and resets to the default data.

Pitch error correction (KA-200 Counter & AT100 series)
This function allows correction of machine errors, thus improving positioning accuracy.

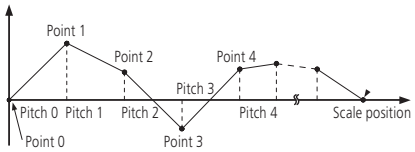

Function lock (KA-200 Counter)
This function prevents any risk of the operational settings being accidentally changed.

MILLING MACHINE FUNCTIONS

Zero approach machining [INC mode]

Zero approach machining can be repeated at preset intervals. Since the counter keeps the total displacement in absolute coordinates, a positioning error made by the operator at one tooling position has no effect on the remaining positions.

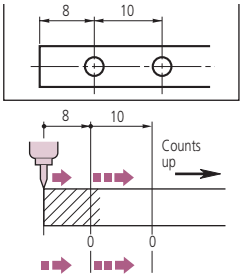

Bolt-hole circle machining

In milling, the drilling positions along the circumference of the base circle in the absolute zero approach mode can be easily displayed by entering the center coordinates, diameter, and number of divisions of the base circle.

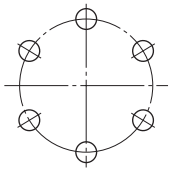

Pitch machining

Bores holes between two arbitrary points on the X-Y plane at equal spaces. By inputting the number of holes and positions of the start and end points, holes can be bored easily at equal spacing. Errors due to table positioning by the machine are automatically corrected to the next target value.

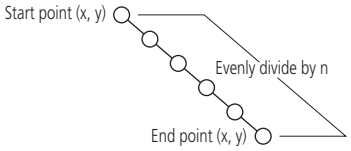

Scale reference point setting

The linear scale has scale reference points at 50mm intervals. When one of the points is detected, the linear scale issues a signal to hold/restart counting. If the distance from a scale reference point to the machine origin is registered as the offset value, it will be retained even when the power is off (hold function). When the power is turned on, the machine origin or machining datum can be easily recalled (set function).

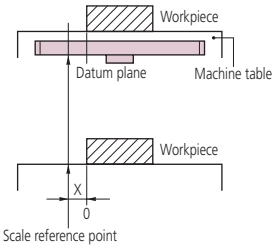

LATHE FUNCTIONS

Diameter display

The doubled scale displacement can be displayed. This convenient function can be used to display the diameter of a workpiece during a turning operation.

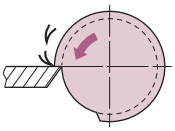

Addition of 2-scale data

The sum of the displayed values of two axes can be displayed. If a machine has two feed components, fine feed and coarse feed, each with its own scale, this function can be used to sum the two feed values.

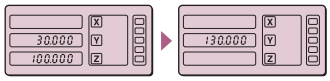

Memorization of machining reference point for each cutting tool (for KA-200 Counter)

Absolute coordinate and incremental coordinate can be switched by every one of four cutting tools. The counter can memorize the center of a machining workpiece as a reference point and it can display the diameter of the machine workpiece by using absolute coordinate. The counter can zeroset/preset at the arbitrary position by using incremental coordinate.

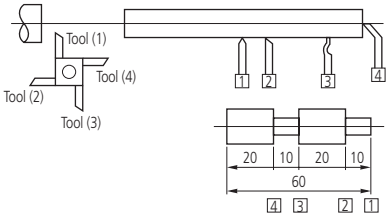

SPECIAL FUNCTIONS

Connection with line driver output scale/linear gage

The KA-200 Counter can also connect with a line-driver output type scale and a linear gage.
To connect these sensors use optional LINE conversion adapters.
For detailed information, refer to page 30.

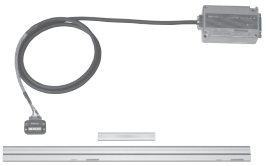

Milling Packages

Electro-Magnetic ABSOLUTE DRO Packages for Milling Machines

Using KA-200 Counter and AT715 Linear Scales

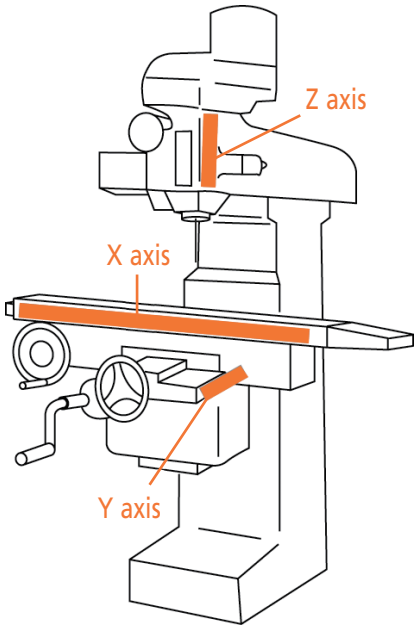

2 Axis, KA-200 Counter Milling System

Package Includes:

- KA-200 Counter
- Brackets for Linear Scales
- AT715 Electro-Magnetic Absolute Linear Scales
- Display Arm Kit

2 Axis Milling Machine System Packages

X Axis Travel (AT715 Slim Electromagnetic)	Y Axis Travel (AT715 Slim Electromagnetic)			
	12″ (539-805R)	14″ (539-806R)	16″ (539-806R)	18″ (539-808R)
24" (539-811R)	**64PKA170**	**64PKA172**		
30″ (539-814R)	**64PKA058B**	**64PKA060A**	**64PKA175**	–
32" (539-815R)		**64PKA169**	**64PKA176**	
36″ (539-816R)	**64PKA059A**	**64PKA168**	**64PKA062A**	**64PKA178**
40″ (539-817R)	**64PKA171**	**64PKA061A**	**64PKA063A**	**64PKA064A**
44" (42") (539-815R)	**64PKA173**		**64PKA177**	

Scale lengths provided above specify travel.

Milling Packages

Electro-Magnetic ABSOLUTE DRO Packages for Milling Machines

3 Axis (Quill) - AT715 Slim Electromagnetic for all axes

Order No.	Description
64PKA065A	MILL pkg, 3-axis, ABS Scales, 12″ x 30″ x 6″ w/3 axis KA-200 Counter (174-175A)
64PKA066A	MILL pkg, 3-axis, ABS Scales, 12″ x 36″ x 6″,w/3 axis KA-200 Counter (174-175A)
64PKA067A	MILL pkg, 3-axis, ABS Scales, 16″ x 36″ x 6″ w/3 axis KA-200 Counter (174-175A)
64PKA179	MILL PKG,3-AXIS, ABS SCALES 32" X 14" X 4" w/3 axis KA-200 Counter (174-185A)
64PKA180	MILL PKG,3-AXIS, ABS SCALES 36" X 14" X 4" w/3 axis KA-200 Counter (174-185A)
64PKA181	MILL PKG,3-AXIS, ABS SCALES 36" X 16" X 4" w/3 axis KA-200 Counter (174-185A)
64PKA182	MILL PKG,3-AXIS, ABS SCALES 30" X 14" X 6" w/3 axis KA-200 Counter (174-185A)
64PKA183	MILL PKG,3-AXIS, ABS SCALES 32" X 14" X 6" w/3 axis KA-200 Counter (174-185A)
64PKA184	MILL PKG,3-AXIS, ABS SCALES 36" X 14" X 6" w/3 axis KA-200 Counter (174-185A)
64PKA185	MILL PKG,3-AXIS, ABS SCALES 32" X 16" X 6" w/3 axis KA-200 Counter (174-185A)
64PKA186	MILL PKG,3-AXIS, ABS SCALES 40" X 18" X 6" w/3 axis KA-200 Counter (174-185A)
64PKA213	MILL PKG,3-AXIS, ABS SCALES 40" X 16" X 5" w/3 axis KA-200 Counter (174-185A)
64PKA216	MILL PKG,3-AXIS, ABS SCALES 40" X 12" X 5" w/3 axis KA-200 Counter (174-185A)
64PKA217	MILL PKG,3-AXIS, ABS SCALES 48" X 18" X 18" w/3 axis KA-200 Counter (174-185A)
64PKA218	MILL PKG,3-AXIS, ABS SCALES 60" X 24" X 28" w/3 axis KA-200 Counter (174-185A)
64PKA219	MILL PKG,3-AXIS, ABS SCALES 80" X 32" X 28" w/3 axis KA-200 Counter (174-185A)
64PKA225	MILL PKG,3-AXIS, ABS SCALES 48" X 18" X 22" w/3 axis KA-200 Counter (174-185A)

Scale lengths provided above specify travel.

3 Axis (Knee) - AT715 Slim Electromagnetic for all axes

Order No.	Description
64PKA187	MILL PKG,3-AXIS, ABS SCALES 32" X 13"/14" X 16" w/3 axis KA-200 Counter (174-185A)
64PKA188	MILL PKG,3-AXIS, ABS SCALES 36" X 13"/14" X 16" w/3 axis KA-200 Counter (174-185A)
64PKA189	MILL PKG,3-AXIS, ABS SCALES 30" X 14" X 16" w/3 axis KA-200 Counter (174-185A)
64PKA190	MILL PKG,3-AXIS, ABS SCALES 36" X 16" X 16" w/3 axis KA-200 Counter (174-185A)
64PKA191	MILL PKG,3-AXIS, ABS SCALES 36" X 16" X 18" w/3 axis KA-200 Counter (174-185A)
64PKA192	MILL PKG,3-AXIS, ABS SCALES 40" X 18" X 16" w/3 axis KA-200 Counter (174-185A)
64PKA193	MILL PKG,3-AXIS, ABS SCALES 40" X 18" X 18" w/3 axis KA-200 Counter (174-185A)
64PKA209	MILL PKG,3-AXIS, ABS SCALES 32" X 16" X 16" w/3 axis KA-200 Counter (174-185A)
64PKA214	MILL PKG,3-AXIS, ABS SCALES 30" X 12" X 16" w/3 axis KA-200 Counter (174-185A)
64PKA215	MILL PKG,3-AXIS, ABS SCALES 40" X 12" X 16" w/3 axis KA-200 Counter (174-185A)

Scale lengths provided above specify travel.

Brackets for Milling Machines

Mounting and Counter Display Brackets

Bridgeport Style Y-Axis (AT116 & AT715)
One Piece Bracket Kit
Order No. 64AAB195 (12")

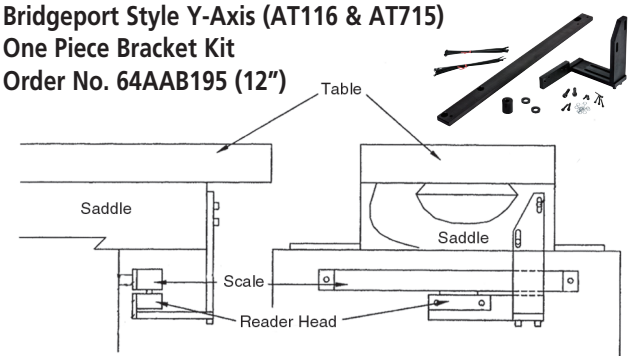

X-Axis Rear Mount
(AT116 and AT715) Screw Kit
Order No. 64AAB199

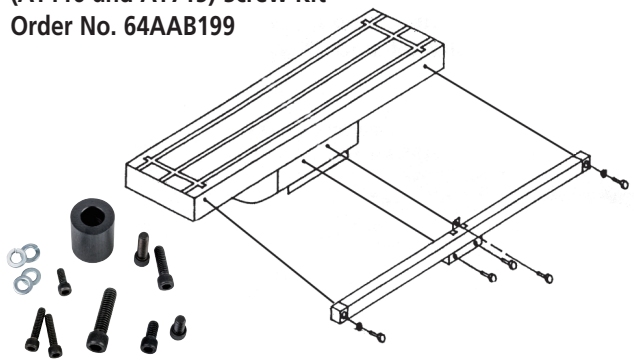

Universal Y-Axis (AT116 & AT715) Two Piece Bracket Kit
Order No. 64AAB196 (12")
Order No. 64AAB197 (14 &16")
Order No. 64AAB198 (18")

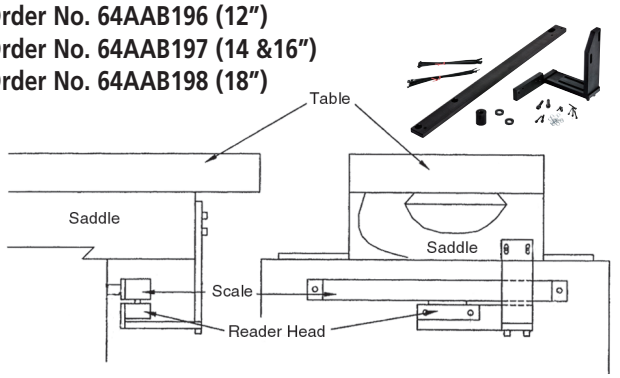

Z-Axis (Quill)
(AT116 & AT715)
Bracket Kit
Order No. 64AAB192

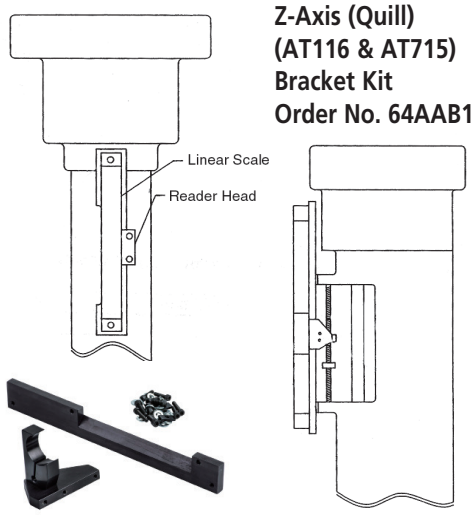

Z-Axis (Knee)
(AT116 & AT715)
Bracket Kit
Order No. 64AAB193

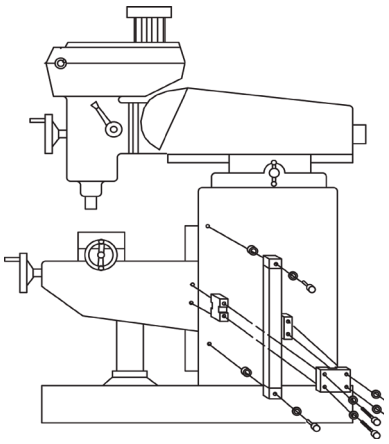

Order No.	Description	Remark
64AAB200	Machine Arm Kit for KA-200 Counter (With Tray)	Current Style
53AAA375	Tray for KA-200 Counter (Tray Only)	For Kit **64AAB200** and Mini Stand

Quill Kit for Milling Machines

Quill Kit with Absolute Encoder

Easy Installation Fits Most Vertical Knee Mills

- Easy to read LCD with resolution of .0005"/0.01mm. 0 -6" Travel inch/mm
- Push button controls for inch/mm, Zero-Set and On/Off.
- Powered by a single SR-44 Battery which lasts about 1 year with normal use.
- SPC Output for data transmission to data processors or a remote display.

Order No.	Description
053906B	Digimatic Quill Kit complete with brackets & scale for Bridgeport Type machines.

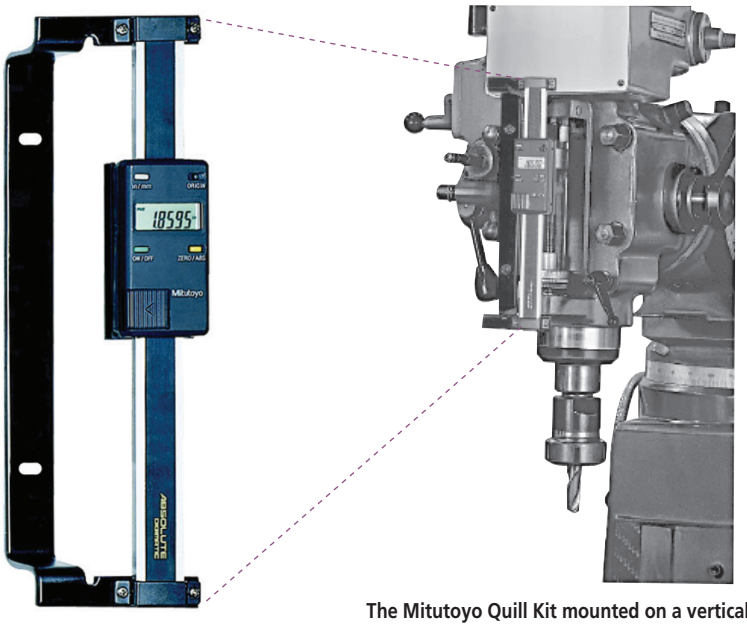

The Mitutoyo Quill Kit mounted on a vertical mill.

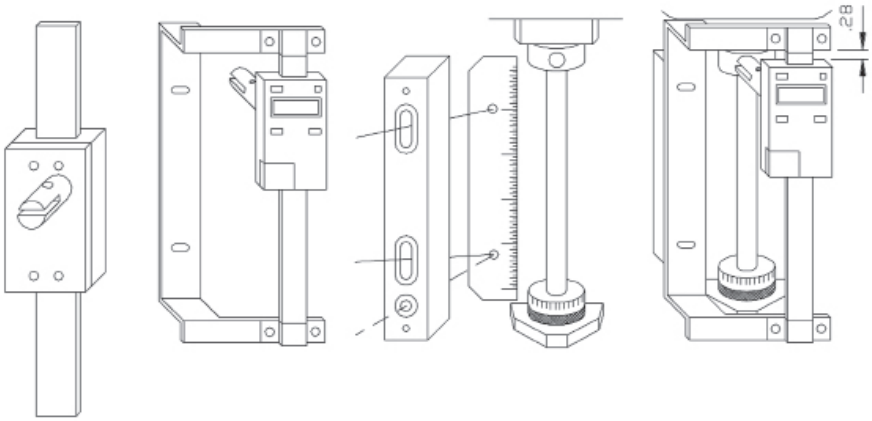

Lathe Packages

Electro-Magnetic ABSOLUTE DRO/Glass Linear Scale Packages for Lathe System

Using KA-200 Counter, AT116 and AT715 Linear Scales

5 Year Warranty
Digital Readout Packages
Mitutoyo

2 Axis, KA-200 Counter Lathe System

Package Includes:

- KA-200 Counter
- AT116 and AT715 Linear Scale combinations
- Bracket Kit (refer to page 15)
- Counter Stand
- Counter Tray

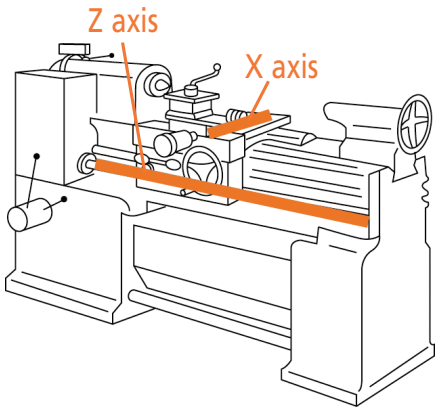

Lathe Machine System Packages

Z axis travel (AT715 Slim Electromagnetic)	X Axis Travel (AT116 Slim Glass Scale)					
	6"(539-272-30)	8"(539-273-30)	10"(539-274-30)	12"(539-275-30)	14"(539-276-30)	16"(539-277-30)
28" (539-813R)	**64PKA035A**	–	–	–	–	–
30" (539-814R)	**64PKA036A**	–	–	–	–	–
36" (539-816R)	**64PKA037A**	**64PKA194**	–	–	–	–
40" (539-817R)	**64PKA038A**	**64PKA039A**	**64PKA042A**	**64PKA046A**	**64PKA052A**	–
44" (539-818R)	–	**64PKA040A**	**64PKA043A**	**64PKA047A**	**64PKA053A**	–
48" (539-819R)	–	**64PKA041A**	**64PKA044A**	**64PKA048A**	**64PKA054A**	–
52" (539-820R)	–	**64PKA195**	**64PKA198**	**64PKA049A**	**64PKA055A**	–
60" (539-822R)	–	**64PKA196**	**64PKA045A**	**64PKA050A**	**64PKA056A**	**64PKA057A**
68" (539-824R)		**64PKA220**		**64PKA200**		
72" (539-825R)	–	–	–	**64PKA051A**	–	–
80" (539-860R)		**64PKA197**	**64PKA199**	**64PKA210**	**64PKA203**	
88" (539-861R)			**64PKA223***	**64PKA201**		
96" (539-862R)					**64PKA222**	
120" (539-866R)			**64PKA211***	**64PKA202***	**64PKA224/64PKA204***	**64PKA205***

* indicates Z axis is AT103 series (Glass Linear Scale) instead of AT715. AT103 has a larger cross-section vs AT715.

Scale lengths provided above specify travel.

Brackets for Lathes

Mounting Brackets

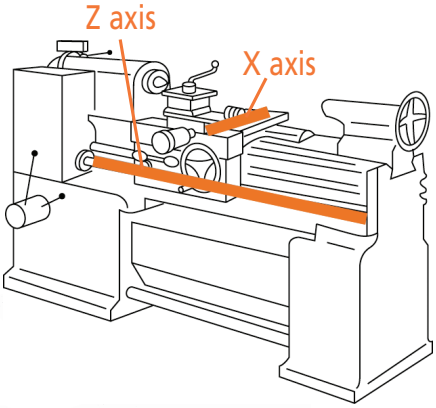

Bracket Kit:	**64AAB191**	Lathe Machine Bracket Kit
	53AAA375	Counter tray (for KA-200 Counter)

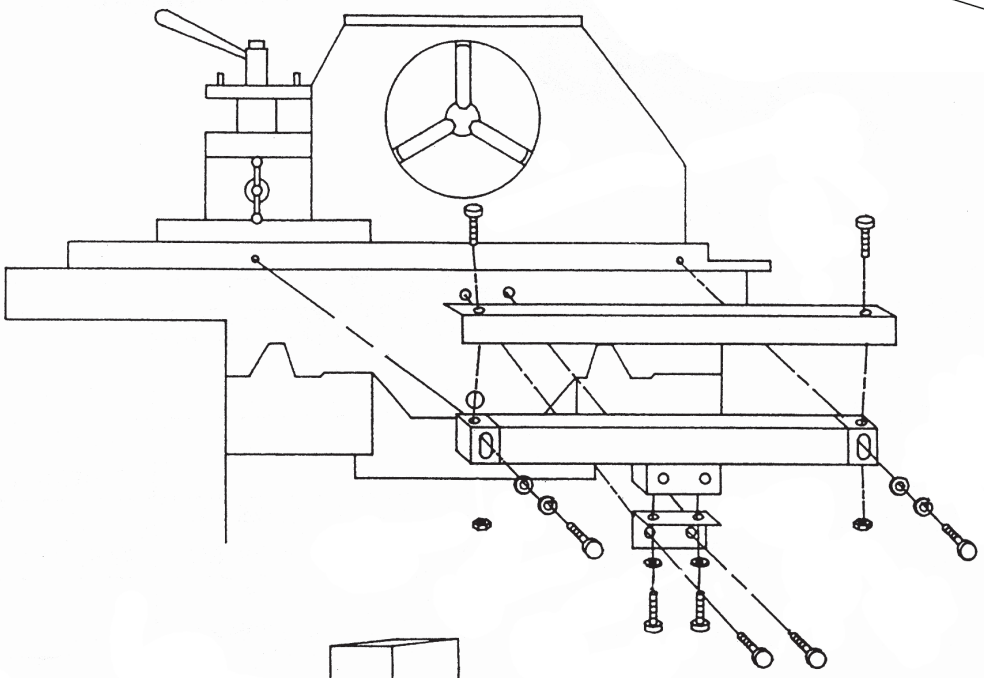

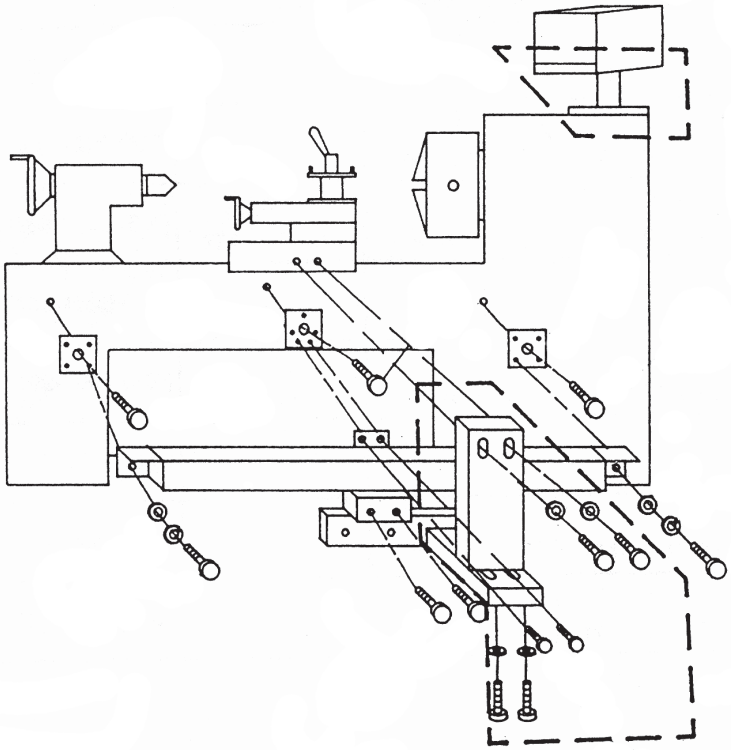

Grinding Packages

High-accuracy Glass Linear Scale Packages for Grinding Machines

Using KA-200 Counter and AT116 Linear Scales

5 Year Warranty
Digital Readout Packages
Mitutoyo

2-axis, KA-200 Counter Grinding System

Package Includes:

- KA-200 Counter
- AT116 Glass Linear Scales
- Bracket Kit (refer to page 19)
- Display Arm Kit

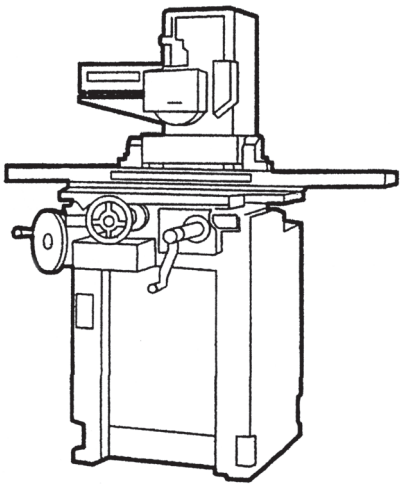

Grinding Machine System Packages

Vertical (AT116 Slim Glass Scale)	Cross Side (AT116 Slim Glass Scale)				
	6″ (539-272-30)	8″ (539-273-30)	10″ (539-274-30)	12″ (539-275-30)	14″(539-276-30)
12″(539-275-30)	**64PKA026A**	**64PKA028A**	–	–	
14″(539-276-30)	**64PKA027A**	**64PKA029A**	–	–	
16″(539-277-30)	–	**64PKA030A**	–	–	
18″(539-278-30)	**64PKA206**	**64PKA212**	**64PKA031A**	**64PKA033A**	
20″(539-279-30)	–	–	–	**64PKA034A**	
24″(539-281-30)	–	–	**64PKA032A**	**64PKA207**	**64PKA208**

Also available with AT715 Electromagnetic Linear Scales with IP-67 rating (highest contamination resistance).
Contact your Mitutoyo representative for ordering information.

Brackets for Grinding Machines

Mounting Brackets

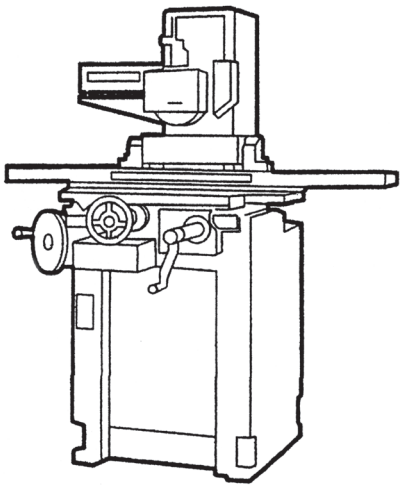

Bracket Kit: **64AAB194,** Grinding Linear Scales

Mounting Arm Kit for Counter: **64AAB200**

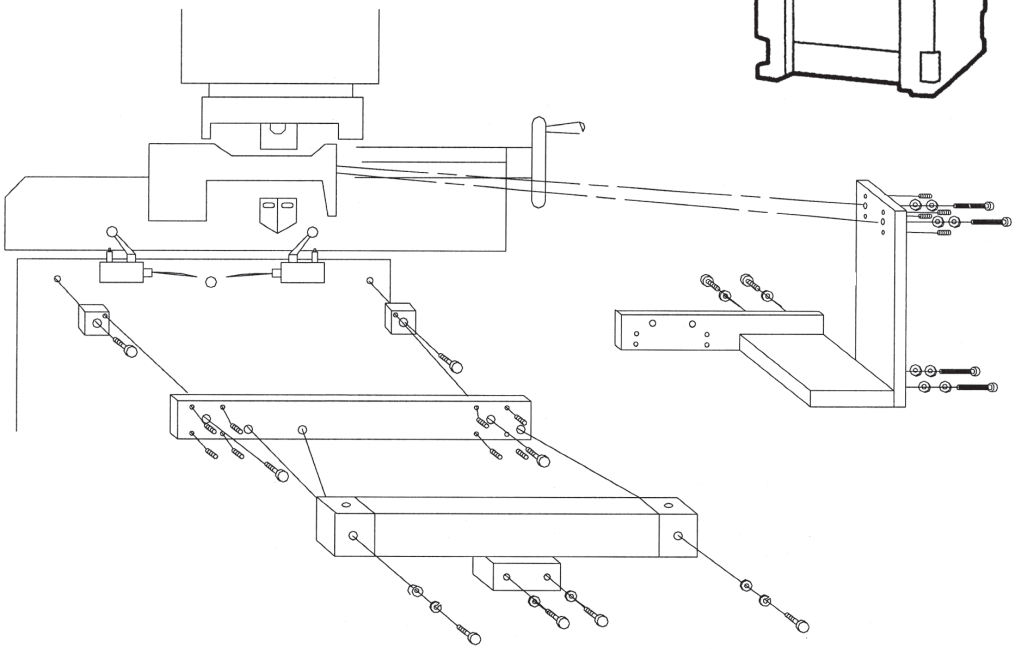

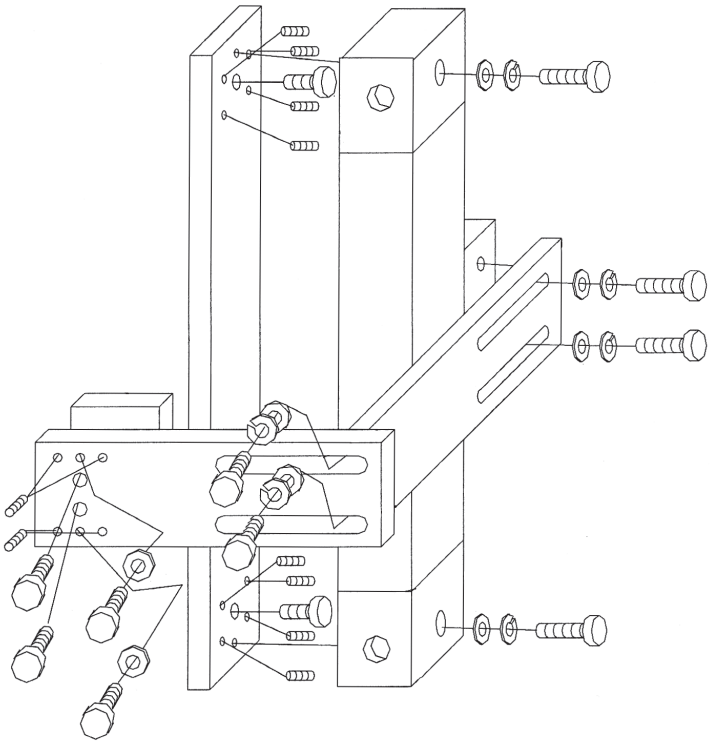

Connecting to External Devices

Mitutoyo's DRO system accurately detects and displays the displacement of machine tool or measuring equipment slideways, and outputs the measurement data and limit signal to a peripheral device such as a PC or PLC through a built-in or optional interface.

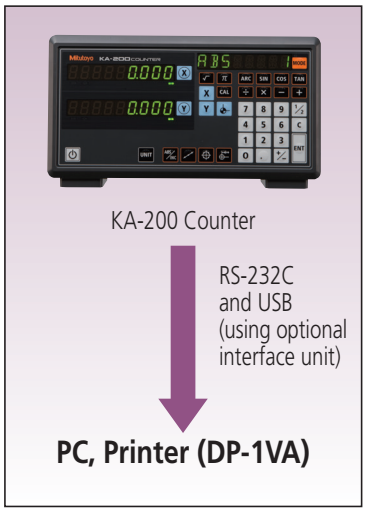

RS-232C Interface

- The RS-232C interface unit enables measurement data output, as well as zero-setting, by commands from the computer.

DATA OUTPUT MODE

Interval Mode (KA-200 Counter):
Measurement data can be output at specific intervals.

SPECIFICATIONS

- Communication specifications

Home position	DCE
Communication method	Half-duplex, nonprocedural
Data transfer speed (Baud rate)	300, 600, 1200, 2400, 4800, 9600, 19200, 38400bps
Bit configuration	Start bit: 1 Data bit*: 7 or 8 Parity bit: 1 (even, odd), 0 (none) Stop bit: 1
Condition setting	By parameter switching

- Operation for data output
  Counter display values can be output in the following ways. Only one signal type can be used for input at any one time.

Method	Counter mode	Output axis	Applicable counters
Data request command X CR LF Y CR LF Z CR LF A CR LF	Normal mode	X-axis Y-axis Z-axis All axes	KA-200 Counter
External extension cable and external load box	Normal mode	Axes that are selected by the external load box	KA
External extension cable and foot switch	Normal mode	All axes	KA

The KA-200 Counter can be controlled externally by executing the following commands through a computer, etc. Command codes must be entered in upper-case characters.

Function	Command code from PC
Zero-setting Sets the counter display values to zero.	RX CR LF: for X-axis RY CR LF*: for Y-axis RZ CR LF*: for Z-axis
Error cancellation Has the same effect as the CANCEL key on the counter.	CO CR LF

- Error code output
  If a data output command is issued when the counter is in an error status, or when an incorrect command is issued, the counter outputs a corresponding error code signal.

Counter display	Code out output
Count overspeed (Error20)	E20
Display overflow (Error30)	E30
Signal error (Error40)	E40
Digital switch setting error (Error50)	E50 (Only for KLD counter)
Internal error (Error60)	No response
Startup display (--------)	E00

Notes

- The output data format is fixed to either 7 or 8 digits, without zero-suppression.
- If data is output from multiple axes, a comma "," is used as a delimiter. e.g. X +12345.678, Y +90123.456 CR LF
- Data is output in the same unit that is used on the counter (mm or inch). However, the unit identifier itself will not be output.

• RS-232C connector
Connector used: 25-pin (KA-200 Counter)

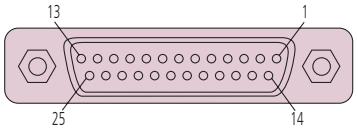

Applicable plug (female)
• HDBB-25P (plug / HIROSE)
• HDB-CHT (case / HIROSE)

No. of pin	Signal	I/O	Remarks
1	FG	—	Frame grounding
2	SD	Input	Command
3	RD	Output	Data
4	—	—	Not used
5	CS	Output	"H" fixed
6	DR	Output	"H" fixed
7	SG	—	Signal grounding
8 to 12	—	—	Not used
13		Input	X-axis load
14		Input	Y-axis load
15		—	Not used
16		Input	Z-axis load
17 to 22		—	Not used
23		Input	X-axis zero-setting
24		Input	Y-axis zero-setting
25		Input	Z-axis zero-setting

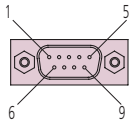

Applicable plug (female)
• HDEB-9S (plug / HIROSE)
• HDE-CHT (case / HIROSE)

No. of pin	Signal	I/O	Remarks
1	—	—	Not used
2	RD	Output	Data
3	SD	Input	Command
4	—	—	Not used
5	SG	—	Signal grounding
6	DR	Output	"H" fixed
7	—	—	Not used
8	CS	Output	"H" fixed
9	—	—	Not used

• Optional RS-232C code out unit for KA-200 Counter: **06AET993**
The optional code out unit enables measurement data output to a peripheral device such as a PC or DP-1VA, as well as zero-setting by commands from PC or the external zero-set box.

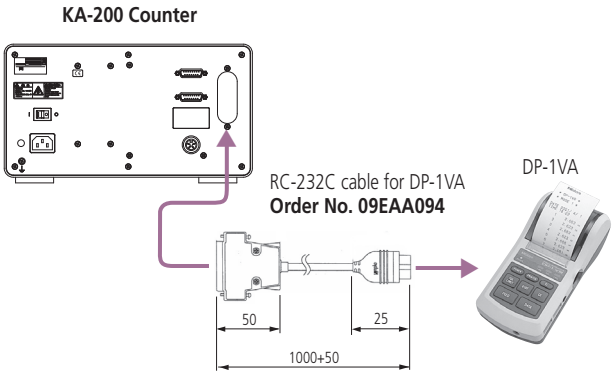

• External extension cable (KA-200 Counter only). By attaching an external extension cable to a KA-200 Counter + RS-232C code out unit, the optional external load box, foot switch and external zeroset box can be connected.
RS-232C outputs can be used together.

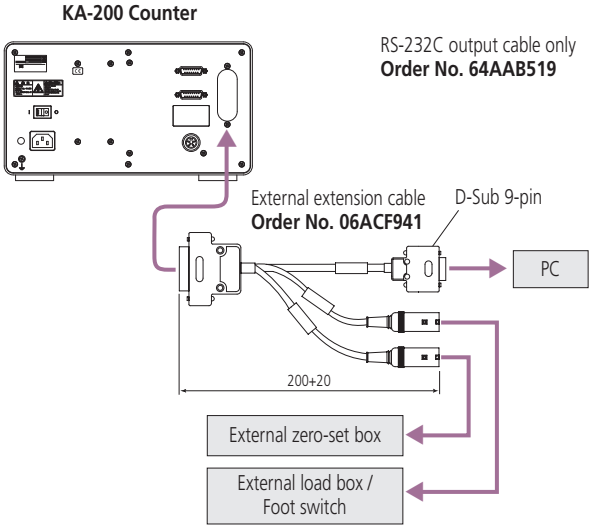

Optional Accessories

External Load Box

Outputs counter value just by pressing the button when using the counter's data output function.
For KA-200 Counter (equipped with RS-232C output).

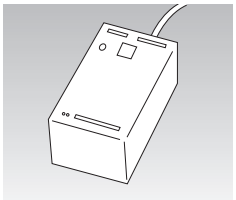

Part No.	Number of axis
937328	3-axis

Note 1: Both of the counter and the external zero-set box have to have the same number of axis.
Note 2: When using for KA-200 Counter, a cable for external connection is also required.

Counter Support

Holds KA series counters.

Part No.	64AAB200

Digimatic Mini-Processor DP-1VA

Prints out the displayed data when connected with RS-232C output of KA-200 Counter. For connection, use RS-232 Counter cable (1m).
(For KA-200 (RS-232C output) Counter.)

Order No.	Product Name
264-504-5A	DP-1VA
Part No.	Product Name
09EAA094	RS-232C counter cable

External Zero Box

Zeroes the counter just by pressing the button when using the counter's data output function.
(For KA-200 (equipped with RS-232C output) Counter.

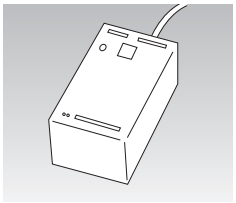

Part No.	Number of axis
936553	3-axis

Note 1: Both of the counter and the external zero-set box have to have the same number of axis.
Note 2: When using for KA-200 Counter, a cable for external connection is also required.

Code Out Unit

RS-232C/USB unit to be mounted on the counter.
(For KA-200 Counter)

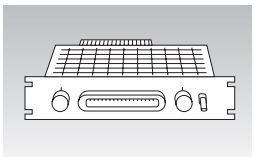

Part No.	Product name
06AET993	Code Out Unit
937179T	Foot switch

Cable for External Connection

External zero-set box, external load box and external load foot switch can be used when connected with RS-232C output of KA-200 Counter. Combination use with RS-232C output is available.

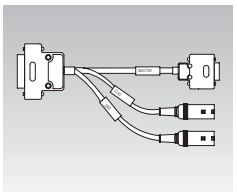

Part No.	06ACF941

External Load Foot Switch

Connects to the external load/ zero cable (06ACF941) when also using the optional RS-232C card of KA, KS and KC counters. The foot switch can be used to output the displayed data.

Part No.	965004

Connects to the output trigger port on the back of the KA-200 Counter and triggers RS-232C output when using the optional RS-232C card. (09CAB217 for KA, or RS-232C output from 06AET993 for KA-200)

Part No.	64AAB336

Extension Cable

Use the extension cable to extend the cable attached to the linear scale when the linear scale and the counter are placed far apart. The Type A extension cable is provided with a water-proof connector. (The Type A is not compatible with the AT115, AT116 and AT715 Linear Scale units.)

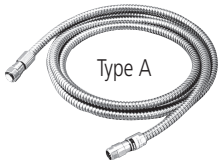

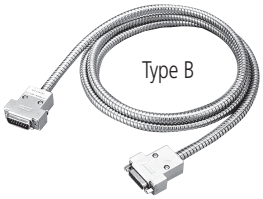

Cable Type A for AT102/103/111/112/113/181 (Only)

Cable Length	Order No.	Mass
6.5 ft (2m)	09AAA033A	0.35kg
16.4 ft (5m)	09AAA033B	0.75kg
22.9 ft (7m)	09AAA033C	1.01kg

Note: Do not allow the entire length of the cables to exceed 20m.

Cable Type B for AT715/AT115/AT116 and AT102/103/111/112/113/181 (db 15 connectors)

Cable Length	Order No.	Mass
6.5 ft (2m)	09AAB674A	0.35kg
16.4 ft (5m)	09AAB674B	0.75kg
22.9 ft (7m)	09AAB674C	1.01kg

Note: Do not allow the entire length of the cables to exceed 20m.

Adapter Cross Reference

(for adapting old linear scales to new counters, or new linear scales to old counters)

09AAA207

09AAA198

	Linear Scale Series No.	Adapter No.	Counters
Old Linear Scales with 6 pin round connectors	FOR AT2-N, AT2, AT-11N, AT11, AT12N (529 Series)	09AAA207	All KA, KS, KC, UDR Series Counters with 15 pin connectors. (All 174 Series)
Current/new Linear Scales with 15 pin D-Sub connectors	FOR AT102, AT103, AT111, AT112, AT113, AT115, AT116, AT181	09AAA181	For all .0001" resolution counters with seven pin round connectors
		09AAA181V*	APL Counter 164-660*, 164-661*, 164-662* MPK-2L 983-352
		09AAA198	For all .0005" resolution counters with six pin round connectors
		09AAA198V*	APL Counter 164-660*, 164-661*,164-662*, 164-563*, 164-664*, 164-665* PL and PL Zero Output Counter 164-252A, 164-254A, 164-295A

* V = Vertical type
When only replacing one linear scale, you can use either horizontal or vertical type adapter.

Mitutoyo

PSU-200

Pulse Signal Conversion Interface

Order No.	Model Name
539-005	PSU-200

FEATURES

- +5VDC external power supply.
- Applicable withl inear scales with the sinusoidal signal output.
- Quadrature signal output (conforming to EIA standard RS422-A).
- Alarm function for detecting broken wires or short circuits in the detector, over-speed and fluctuation errors in the input signal from the detector.
- LED indications. Origin signal input alarm for power supply (voltage drop and noise).
- DIP switch functions. Direction switching. Mode switching (high impedance/alarm signal output). Division selection (4/8/10/20/40/80/100/200) Min. edge interval selection (1000/500/250/125/62.5ns)

SPECIFICATIONS

Number of axes	1 axis
Number of deviation	4, 8, 10, 20, 40, 80, 100 or 200 (switchable)
Functions	Division setting: 4/8/10/20/40/80/100/200 Min. edge interval setting: 1000/500/250/125/62.5ns Direction switching LED for alarm indication: Broken wires and short circuits in the linear scale, abnormal signal, over speed Alarm output mode switching: High impedance output/alarm signal output external alarm reset (photo-coupler input) LED for origin detection LED for low-level power supply voltage warning
Power supply	5VDC±5% on the power terminal
Consumption	200mA (except the scale)
Operating temperature	0°C to 40°C
Mass	Approx. 620g (1.4 lbs)

Applicable Linear Scale*

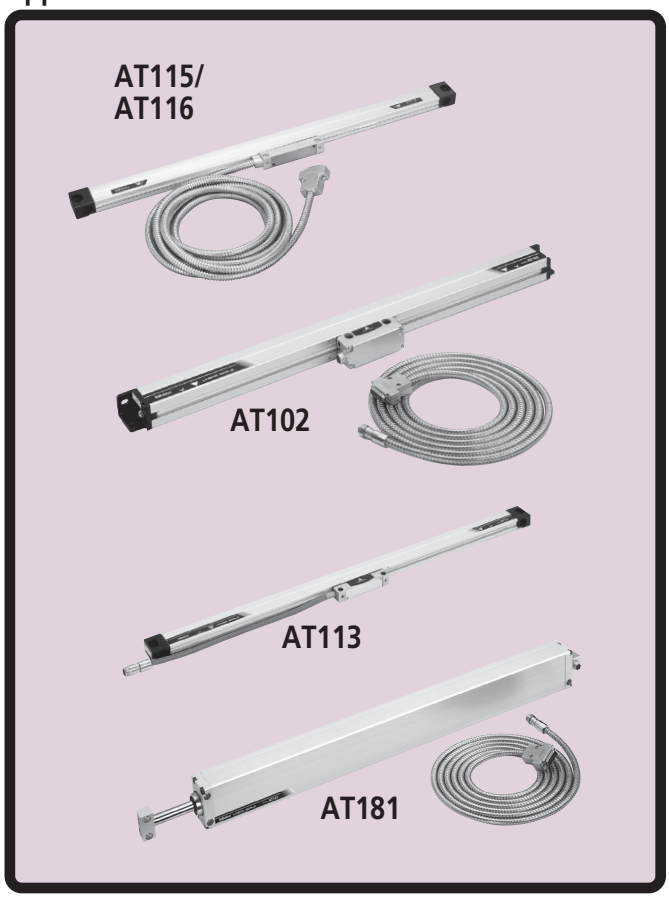

*Does not work with AT715 electromagnetic scales

Input Connector

■ **Connector:**
D-Sub 15S

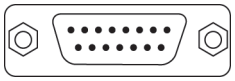

Pin No.	Signal name
1, 2	0V
3, 4	+5V
5	ØA
6	ØB
7	Vref
8	ØZ
9	AL
10 - 14	NC
15	F.GND

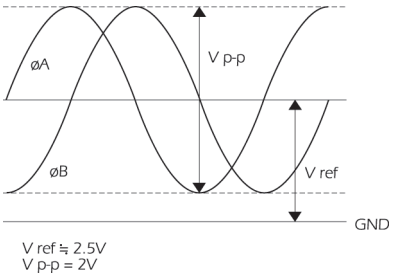

Arrangement of cable connection

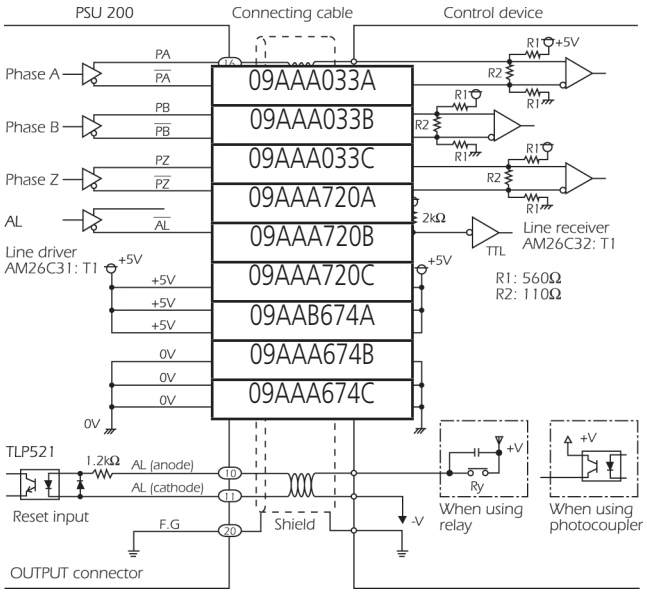

Reset input: Design the connection so that the current of the alarm reset input is between 3mA and 10mA. An alarm can be reset by supplying a voltage of 5V to 12V between the anode and cathode terminals because a resistor (1.2kW) is provided inside the PSU200. If the voltage is greater than 12V, add an appropriate external resistor.

Dimensions

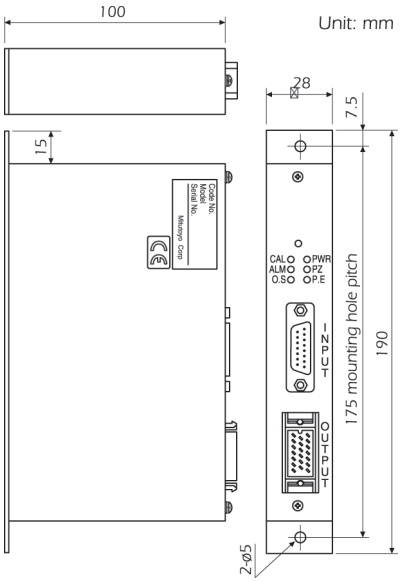

Output Connector

■ **Connector:**
MR20RM [Manufacturer: Honda Tsushin]

■ **Applicable plug (standard accessory):**
MR20LF [Manufacturer: Honda Tsushin]

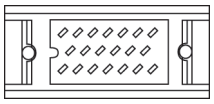

Pin No.	Signal name
1, 2	0V
3, 4	+5V
5	ØA
6	ØB
7	Vref
8	ØZ
9	AL
10 - 14	NC
15	F.GND

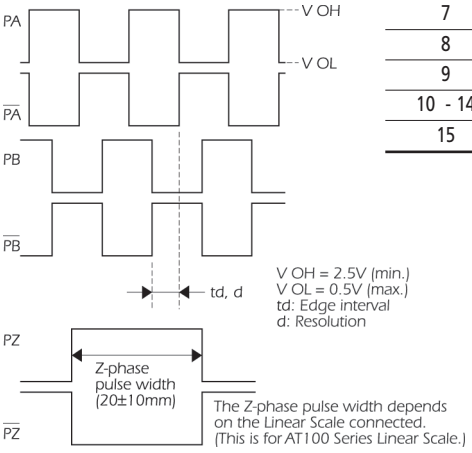

Maximum response speed

Deviation	Min. edge interval*3	Input signal pitch*2 4µm	8µm	20µm
4	62.5ns	120m/min	240m/min	600m/min
	125ns	120m/min	240m/min	600m/min
	250ns	120m/min	240m/min	600m/min
	500ns	120m/min	240m/min	600m/min
	1ms	60m/min	120m/min	300m/min
8	62.5ns	120m/min	240m/min	600m/min
	125ns	120m/min	240m/min	600m/min
	250ns	120m/min	240m/min	600m/min
	500ns	60m/min	120m/min	300m/min
	1ms	30m/min	60m/min	150m/min
10	62.5ns	120m/min	240m/min	600m/min
	125ns	120m/min	240m/min	600m/min
	250ns	96m/min	192m/min	480m/min
	500ns	48m/min	96m/min	240m/min
	1ms	24m/min	48m/min	120m/min
20	62.5ns	120m/min	240m/min	600m/min
	125ns	96m/min	192m/min	480m/min
	250ns	48m/min	96m/min	240m/min
	500ns	24m/min	48m/min	120m/min
	1ms	12m/min	24m/min	60m/min
40	62.5ns	96m/min	192m/min	480m/min
	125ns	48m/min	96m/min	240m/min
	250ns	24m/min	48m/min	120m/min
	500ns	12m/min	24m/min	60m/min
	1ms	6m/min	12m/min	30m/min
80	62.5ns	48m/min	96m/min	240m/min
	125ns	24m/min	48m/min	120m/min
	250ns	12m/min	24m/min	60m/min
	500ns	6m/min	12m/min	30m/min
	1ms	3m/min	6m/min	15m/min
100	62.5ns	38.4m/min	76.8m/min	192m/min
	125ns	19.2m/min	38.4m/min	96m/min
	250ns	9.6m/min	19.2m/min	48m/min
	500ns	4.8m/min	9.6m/min	24m/min
	1ms	2.4m/min	4.8m/min	12m/min
200	62.5ns	19.2m/min	38.4m/min	96m/min
	125ns	9.6m/min	19.2m/min	48m/min
	250ns	4.8m/min	9.6m/min	24m/min
	500ns	2.4m/min	4.8m/min	12m/min
	1ms	1.2m/min	2.4m/min	6m/min

* The maximum response speed may be limited depending on the response speed of the linear scale itself.

Optional Adapters

When using an optional extension cable

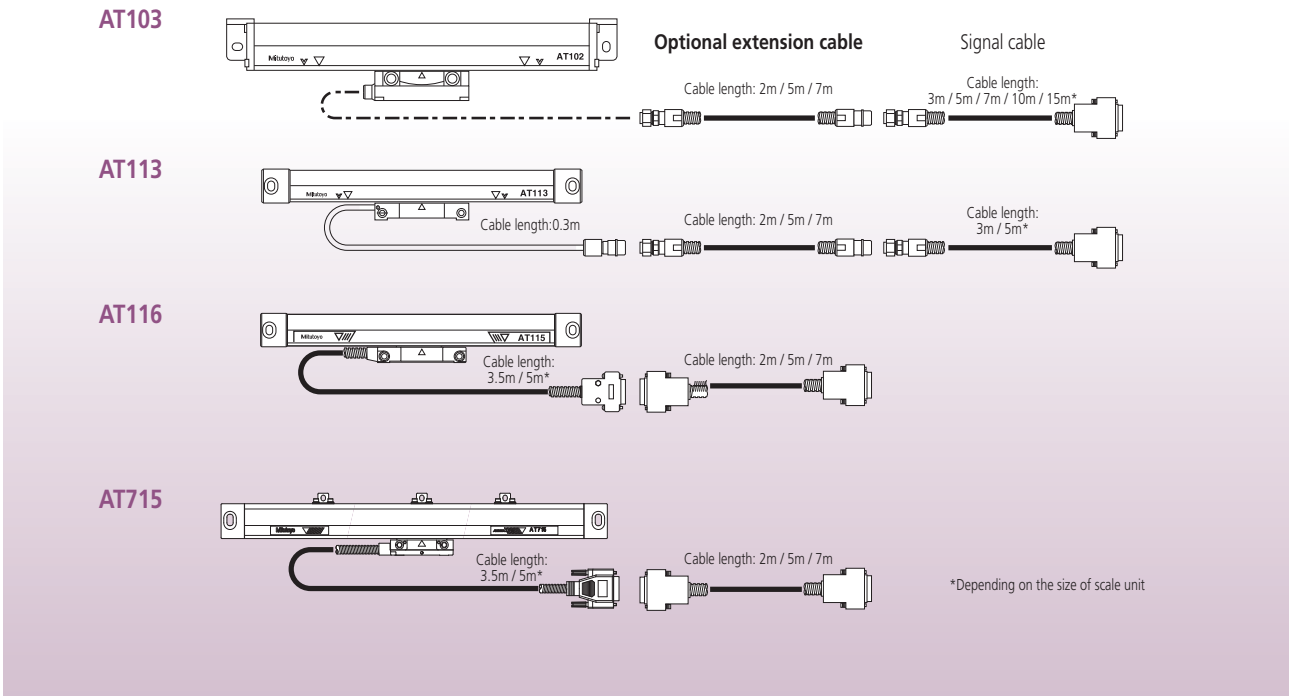

Line Conversion Adapter

Connects a line-driver-output linear scale, a linear gage and a KA-200 Counter.

Configuration of line-driver output models and connecting adapters for the KA-200 Counter

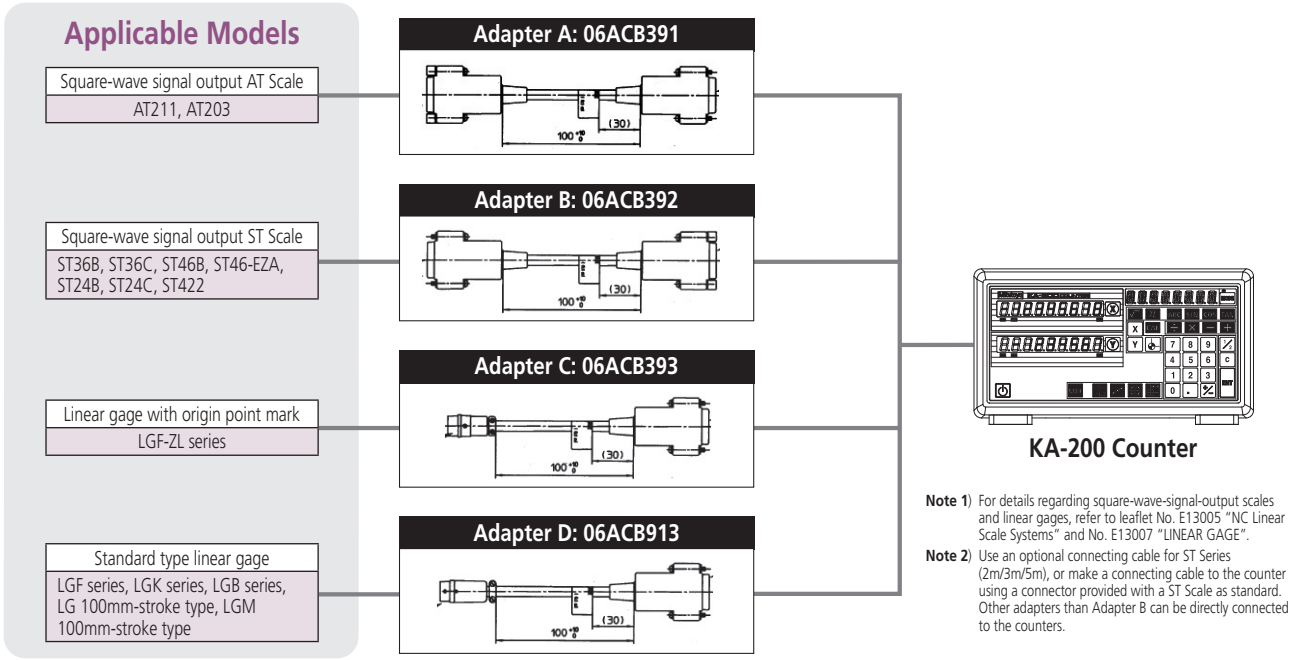

Note 1) For details regarding square-wave-signal-output scales and linear gages, refer to leaflet No. E13005 "NC Linear Scale Systems" and No. E13007 "LINEAR GAGE".

Note 2) Use an optional connecting cable for ST Series (2m/3m/5m), or make a connecting cable to the counter using a connector provided with a ST Scale as standard. Other adapters than Adapter B can be directly connected to the counters.

CAUTION

When using adapters A to D, maximum response speed is determined by the resolution of the connected models.

When the parameter 96 of the KA-200 Counter is set to 5 (input frequency: 300kHz)

Connected model's resolution	Maximum response speed
1µm	300mm/s
0.5µm	150mm/s
0.2µm	60mm/s
0.1µm	30mm/s

Replacement Parts

Order No.	Description	Remark
–	AT102 Read Head	Contact Mitutoyo
09AAA278	AT102 Read Head for Extra-Long Scale	3250mm and Longer
06ADK738	AT103 Read Head	
09AAA006	AT112 Read Head	
06ACX822	AT113 Read Head	
–	AT115 Read Head (3m cable)	Contact Mitutoyo
–	AT115 Read Head (5m cable)	Contact Mitutoyo
–	AT116 Read Head (3.5m cable)	Contact Mitutoyo
–	AT116 Read Head (5m cable)	Contact Mitutoyo
09AAB661A	AT715 Read Head (3.5m cable)	Special calibration required. Contact Mitutoyo.
09AAA030A	Signal Cable (9.9'/3m)	For AT102, 103, 111, 112, 113, 181
09AAA030B	Signal Cable (16.5'/5m)	For AT102, 103, 111, 112, 113, 181
09AAA030C	Signal Cable (23.1'/7m)	For AT102, 103, 111, 112, 113, 181
09AAA030D	Signal Cable (10m)	For AT102, 103, 111, 112, 113, 181
09AAA030E	Signal Cable (15m)	For AT102, 103, 111, 112, 113, 181

Extension Cables

Order No.	Description
09AAA033A	2m-For AT102,103,111,112,113,181
09AAA033B	5m-For AT102,103,111,112,113,181
09AAA033C	7m-For AT102,103,111,112,113,181
09AAB674A	2m-For AT715, AT115, 116
09AAA674B	5m-For AT715, AT115, 116
09AAA674C	7m-For AT715, AT115, 116

Lip Seal Replacements

Order No.	Description	Length (in)	Cut Length (in)	Applicable Linear Scales
64AAB153	DUST PROOF LIP SEAL, STD TYPE, 20"	20	28	AT102, AT103, AT300, AT203, AT2, AT21, AT31
64AAB154	DUST PROOF LIP SEAL, STD TYPE, 40"	40	48	
64AAB155	DUST PROOF LIP SEAL, STD TYPE, 60"	60	68	
64AAB156	DUST PROOF LIP SEAL, STD TYPE, 80"	80	88	
64AAB157	DUST PROOF LIP SEAL, STD TYPE, 100"	100	108	
64AAB158	DUST PROOF LIP SEAL, STD TYPE, 120"	120	128	
64AAB159	DUST PROOF LIP SEAL, STD TYPE, 140"	140	148	
64AAB160	DUST PROOF LIP SEAL, STD TYPE, 160"	160	168	
64AAB161	DUST PROOF LIP SEAL, STD TYPE, 180"	180	188	
64AAB162	DUST PROOF LIP SEAL, STD TYPE, 200"	200	208	
64AAB163	DUST PROOF LIP SEAL, STD TYPE, 220"	220	228	
64AAB164	DUST PROOF LIP SEAL, STD TYPE, 240"	260	268	
64AAB165	DUST PROOF LIP SEAL, SLIM TYPE, 20"	20	28	AT111, AT112(F), AT113, AT114, AT115, AT116, AT715, AT500, AT211, AT11, AT12, Digimatic DRO Systems
64AAB166	DUST PROOF LIP SEAL, SLIM TYPE, 40"	40	48	
64AAB167	DUST PROOF LIP SEAL, SLIM TYPE, 80"	80	88	
64AAB466	DUST PROOF LIP SEAL, SLIM TYPE, 140"	140	148	

Precautions when mounting and handling linear scales

Selecting the scale unit mounting position and mounting method

It is important to keep in mind the following points when determining the scale unit mounting position and orientation.

Ease of mounting

Mount the scale unit making sure that the unit including the detector head and the cables does not interfere with any part of the machine. To facilitate mounting, mount the scale unit and the brackets on machined surfaces wherever possible.

Protection from machining fluids and swarf (mounting orientation)

The scale unit is constructed in such a way that machining fluids and swarf cannot easily enter into the interior of the unit. However, since the openings are protected from entry of foreign material with rubber seals only, avoid directly exposing the scale unit to machining fluids and swarf. Select the mounting orientation of the scale unit after carefully considering the direction in which machining fluids and swarf are sprayed and scattered.

Accuracy considerations

The total system accuracy of the machine on which the scale unit is mounted is not only determined by the scale unit accuracy but by the machine accuracy as well. Particularly for machines with slide tables, geometrical errors may occur, depending on the straightness of moving parts; thus, the scale unit must be mounted in a way that these errors are minimized. If the slide table moves not linearly but curvilinearly, errors occur in proportion to the distance "L" between the scale unit and the machining point (cutter position). Thus, mount the scale unit in a position that minimizes "L".

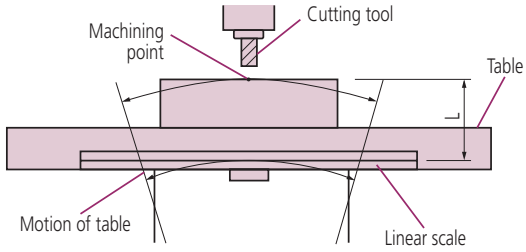

Other considerations

- If the detector head moves, the signal cables also move with the slide table. This should be considered when laying out the signal cables. It is therefore recommended to mount the scale unit on the moving part of the machine.
- Mount the scale unit in place where it is not directly subjected to airflow. When removing swarf using an air gun, be careful of flying swarf.
- The scale unit must be mounted in a place where maintenance can be easily performed in case unit trouble occurs.

Checking parallelism and adjustment of scale unit

In order to attain maximum accuracy, the scale unit must be mounted parallel to the machine guide (machining axis). Incorrect mounting may cause the scale unit to bend or twist.

Checking parallelism

Use a dial indicator as shown in the figure below. To adjust the parallelism between the scale unit and the machine guide, check the parallelism while manually moving the machine's movable part such as the slide table, or measure the parallelism with reference to the guideways of the machine or equivalent reference surface.

- Parallelism tolerance: Refer to each figure on dimensions.
- Checking direction: Back/forward direction on mounting surface and directions along mounting surface (up and down).
- Checking position: Position of scale unit around the mounting blocks.

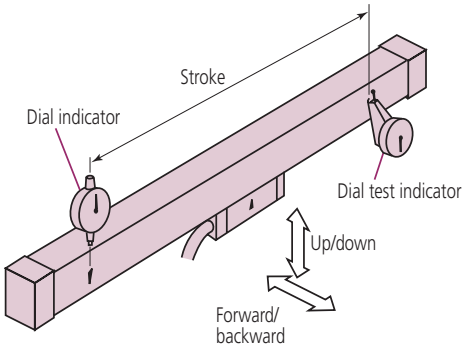

Adjusting parallelism

Adjust the parallelism to within 0.2mm. Spacers used in adjustment are not included in the accessories.

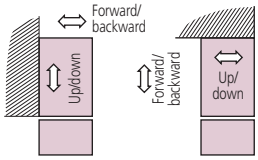

- Adjusting the mounting surface back/forward: Readjust the mounting positions of the brackets or place spacers between the scale unit mounting surface and the mounting blocks.
- Adjusting along (up and down) the mounting surface: Adjust the parallelism by sliding the mounting block on the mounting surface.

Information about Air Supply (Improvement in Dust and Oil Resistance)

Feeding clean compressed air into the scale unit is provided as a means of improving the environmental resistance (to coolant and dust) of assembly-type linear scales. This is done by piping air to either of two M5 screw holes situated on the sides of the scale unit.

* AT103 is equipped as standard with an air supply fitting.

Caution: This air supply method is suggested as optional protection for the scale. The installation of the air supply piping is important and should be implemented as described in the manual. The air should be filtered and the filter replaced periodically, depending on the cleanliness of the air source. Continued use of a heavily contaminated filter may allow contaminants to pass into the scale unit.
For detailed information, contact Mitutoyo Sales Department.

Signal cable layout

It is important to keep in mind the following points when deciding on the layout scheme for signal cables.

When the cable is fixed

The radius of curvature of the signal cable must be larger than 50mm.

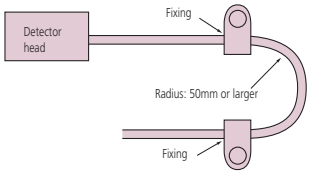

When the cable is movable

When the detector head is the moving element, it carries the signal cable with it during operation. Take care, in such a case, that the radius of curvature of the signal cable is not smaller than 100mm and excessive force is not applied to the cable. It is a good idea to protect the cable with a flexible support cover.

Note) It is important to ensure that the signal cable does not interfere with, and is not chafed by, any part of the machine.

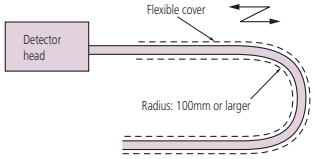

Other considerations

The signal cable is durable enough to withstand repeated bending up to approximately 2 million times (when the bending radius is limited to more than 100mm). When repeated bending exceeding 2 million times is expected, the signal cable should be considered as a consumable part. In such a case, carrying a spare cable will allow immediate replacement when necessary and minimize machine downtime.

Resonance point of linear scale

Each object has a natural frequency, depending on its shape, length, and the type of material. The linear scale frame is not an exception. It has a natural frequency and thereby resonates at a certain frequency. In general, this will not cause a problem, since a machine tool and the Linear Scale frame have different natural frequencies under normal machining conditions. However, should the natural frequency of the machine tool body and the linear scale coincide, the following counter-measures can be taken:

1. Increase rigidity of the mounting bracket for the scale.
2. Add a mid-support to the middle of the scale to shift its resonance point higher.
3. Mount the linear scale at a place where vibrations from the machine tool cannot be easily transmitted.
4. Limit the machine process conditions to be within a specific range in which the natural frequencies of the machine tool and the scale do not coincide.

Maintenance of dust-proof seals

In order to maintain and extend the life of the dust-proof rubber seals, it is recommended that a small amount of silicon lubricant be applied to the contact area between the rubber and the detector head once a year.

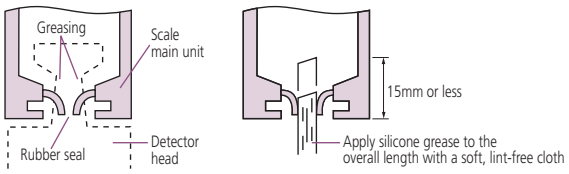

Linear scale evaluation methods

- **Testing within the operating temperature range**
  Testing has proven that there is no abnormality of functions and signals when the linear scale is used within the specified operating temperature range.
- **Temperature cycle (dynamic characteristics) test**
  Testing has proven that there is no abnormality when the linear scale is used under the condition where the ambient temperature continuously changes within the specified range.
- **Vibration test (Sweep test)**
  Testing has proven that the linear scale functions without abnormality when subject to vibration within the frequency range 30Hz to 300Hz at a maximum acceleration of 3g.
- **Noise test**
  In accordance with the EMC Directives, EN61326-1+A1:1998
- **Crate drop test**
  In accordance with the heavy equipment drop test (JISZ0200) specified in the JIS standard.

Constructional features of the linear scale

Joint structure of detector

A ball joint structure is employed at the contact area between the detector head and the slider (sensor unit) inside the scale. This arrangement prevents the slider movement from deviating from the normal moving directions when the detector head is slightly misaligned transversely, thus providing a normal scale reading and increasing flexibility in the scale installation. In addition, this structure is highly rigid and, therefore, has excellent durability.

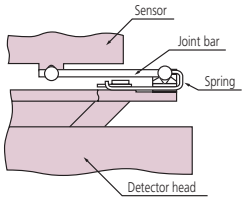

Water-proof connector

A waterproof/splash-proof connector is used to enable separation of the signal cable. Thus, installation and maintenance of the Linear Scale can be easily performed. (The signal cable on the AT115 cannot be separated.)

Conduit-armored type signal cable

The signal cable is protected by the conduit system. Its exterior is made of stainless steel, which is corrosion-resistant and withstands continuous use.

Unique rubber seals

The slider is shaped to glide smoothly through the rubber-seal opening.

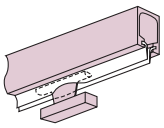

Excellent splash- and dust-proof rubber-seal structure

The rubber seals are made of a strong, special urethane, and wires are inserted in these seals to improve the splash-proofing and dust-proofing of the scale (AT103 only).

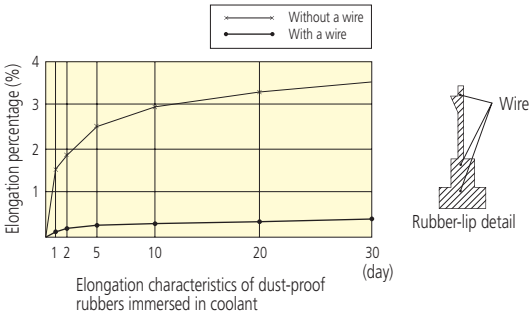

Elongation characteristics of dust-proof rubbers immersed in coolant

Operating Principles

Operating Principle of AT100 Series

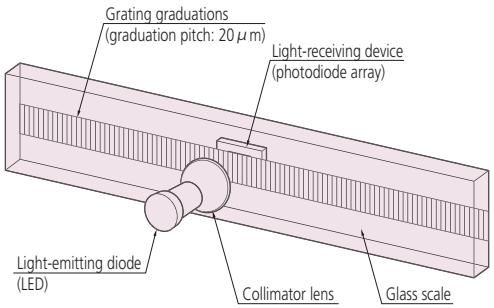

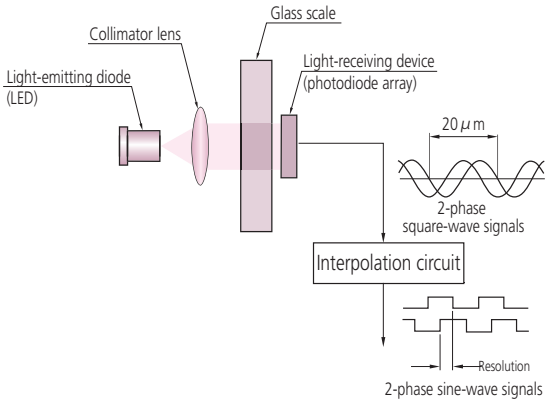

The assembly-type Linear Scale® uses a highly accurate glass scale grating pitch of 20 μm as the basic standard of length. The grating is irradiated with parallel light generated with a Light-Emitting Diode (LED) and collimator lens. The parallel light transmitted through the grating generates an interference pattern with the same pitch as that of a grating on the photodiode array of the light-receiving device. The receiver output signal is 2-phase sinusoidal with a wavelength of 20μm, identical to the pitch of the grating graduations, and is electrically converted to 2-phase square-wave signals by the interpolation circuit. The much smaller working resolution is achieved by detecting the cyclic variation in light intensity incident on the receiver array, as the scale is displaced in a measuring direction, and interpolating accordingly to output a corresponding displacement value.

Detecting Principle Added to AT715

The Absolute system-type linear scale AT715 employs a unique, Mitutoyo-proprietary, electromagnetic induction principle that is highly resistant to environmental contamination.
Achievement of a complete absolute scale with a resolution of 1μm thanks, to a multi-track configuration, enables the user to obtain absolute positional information from the scale immediately power is applied to the counter.

- If time-varying current I1 is applied to coil A, a magnetic flux is generated inside the coil.
- A current I2 is induced in coil B that tends to oppose the build-up of the magnetic flux.

The magnetic permeability between the coils will not vary whether the medium is air, water, or oil.

↓

The electromagnetic induction type sensor has excellent water resistance and oil resistance.

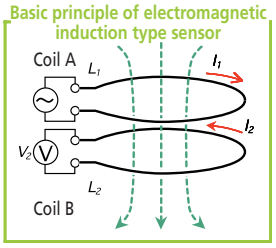

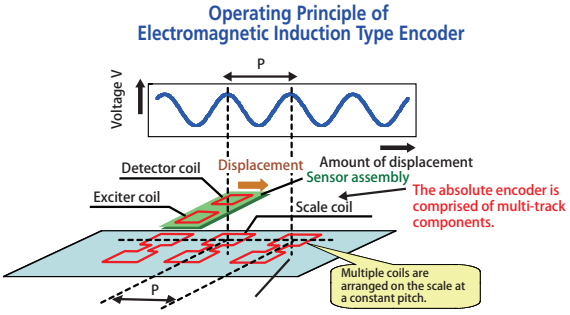

Scale systems for various multi-axis machine tools

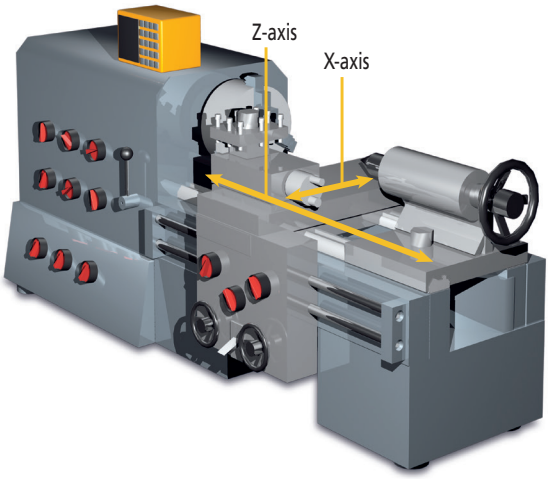

2-axes KA-200 Counter + two scales

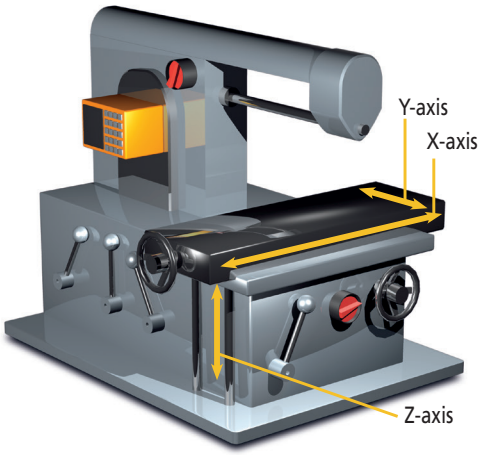

3-axes KA-200 Counter + three scales

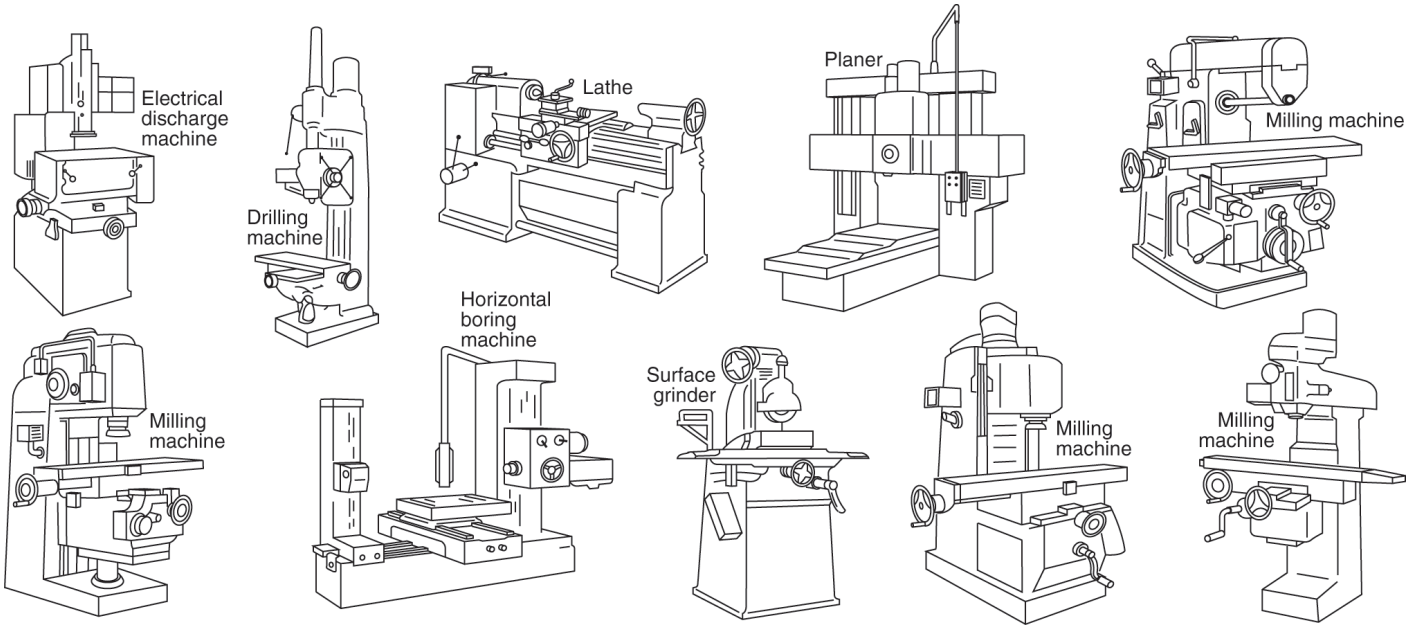

Applications

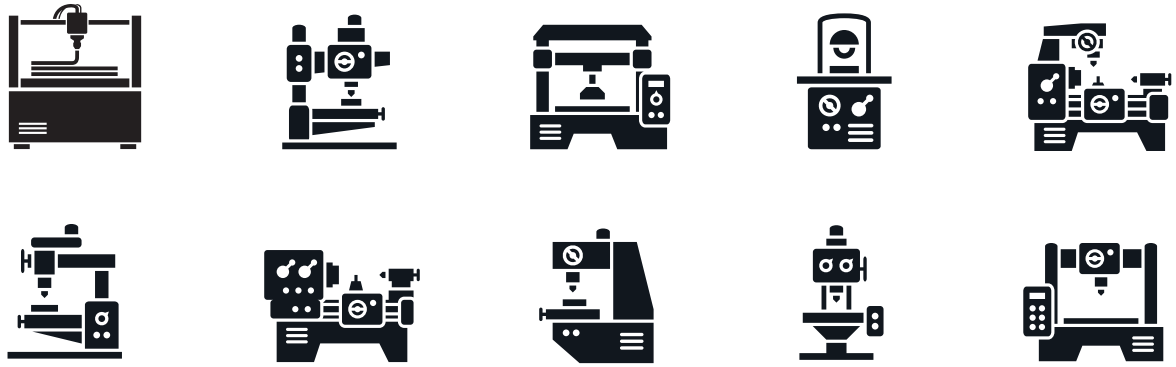

© 2021 Mitutoyo America Corporation

Coordinate Measuring Machines

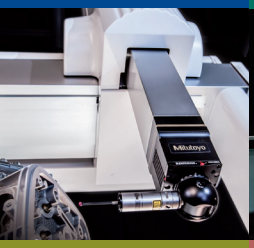

Vision Measuring Systems

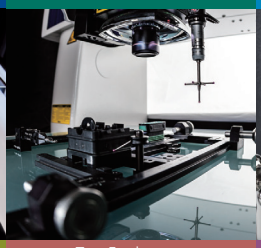

Form Measurement

Optical Measuring

Sensor Systems

Test Equipment and Seismometers

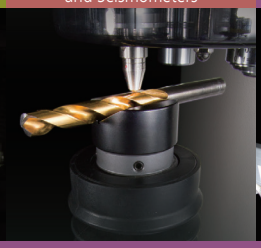

Digital Scale and DRO Systems

Small Tool Instruments and Data Management

Whatever your challenges are, Mitutoyo supports you from start to finish.

Mitutoyo is not only a manufacturer of top-quality measuring products but one that also offers qualified support for the lifetime of the equipment, backed by comprehensive services that ensure your staff can make the very best use of the investment.

Apart from the basics of calibration and repair, Mitutoyo offers product and metrology training, as well as IT support for the sophisticated software used in modern measuring technology. We can also design, build, test and deliver measuring solutions and even, if deemed cost-effective, take your critical measurement challenges in-house on a sub-contract basis.

Find additional product literature and our product catalog

www.mitutoyo.com

Note: All information regarding our products, and in particular the illustrations, drawings, dimensional and performance data contained in this printed matter as well as other technical data are to be regarded as approximate average values. We therefore reserve the right to make changes to the corresponding designs. The stated standards, similar technical regulations, descriptions and illustrations of the products were valid at the time of printing. In addition, the latest applicable version of our General Trading Conditions will apply. Only quotations submitted by ourselves may be regarded as definitive. Specifications are subject to change without notice.

Mitutoyo products are subject to US Export Administration Regulations (EAR). Re-export or relocation of our products may require prior approval by an appropriate governing authority.

Trademarks and Registrations
Designations used by companies to distinguish their products are often claimed as trademarks. In all instances where Mitutoyo America Corporation is aware of a claim, the product names appear in initial capital or all capital letters. The appropriate companies should be contacted for more complete trademark and registration information.

Mitutoyo

Mitutoyo America Corporation
www.mitutoyo.com
One Number to Serve You Better
1-888-MITUTOYO (1-888-648-8869)

M³ Solution Centers:
Aurora, Illinois (Headquarters)
Boston, Massachusetts
Huntersville, North Carolina
Mason, Ohio
Plymouth, Michigan
City of Industry, California
Birmingham, Alabama
Renton, Washington
Houston, Texas

1123-01 • FOR WEB ONLY • Rev. Nov 2023

AMI
Automation and Metrology
1-888-354-2525
auto-met.com