Bulletin No. 2309

Mitutoyo

DRO RETROFIT PACKAGES

Mitutoyo Quality

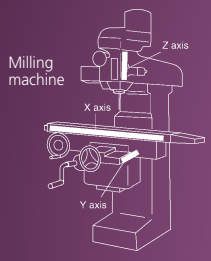

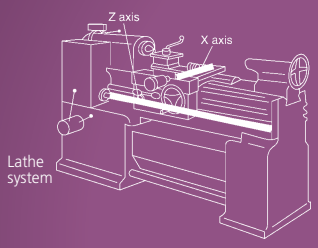

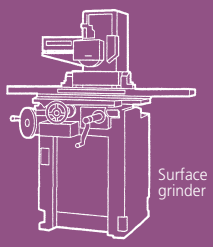

DIGITAL SCALE AND DRO SYSTEMS

NEW Products

AMI
Automation and Metrology
8808 Tyler Blvd, Mentor, OH 44060

1-888-354-2525 | sales@auto-met.com
Request a quote: auto-met.com

Mitutoyo

Milling Packages

Electro-Magnetic ABSOLUTE DRO Packages for Milling Machines

Using KA-200 Counter and AT715 Linear Scales

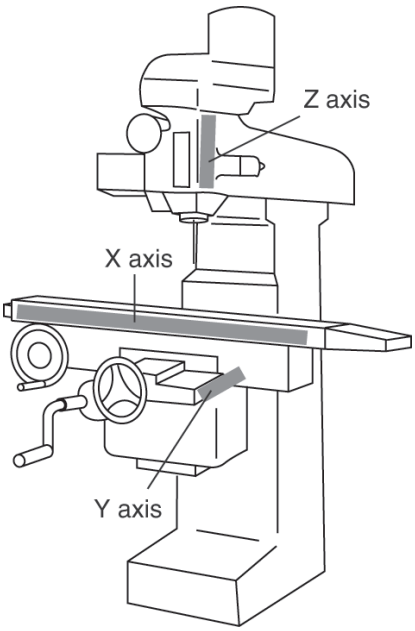

2 Axis, KA-200 Counter Milling System

Package Includes:

- KA-200 Counter
- Brackets for Linear Scales
- AT715 Electro-Magnetic Absolute Linear Scales
- Display Arm Kit

2 Axis Milling Machine System Packages

New Part Numbers

X Axis Travel (AT715 Slim Electromagnetic)	Y Axis Travel (AT715 Slim Electromagnetic)			
	12″ (539-805)	14″ (539-806)	16″ (539-806)	18″ (539-808)
24" (539-811)	**64PKA170**	**64PKA172**		
30″ (539-814)	**64PKA058A**	**64PKA060A**	**64PKA175**	–
32" (539-815)		**64PKA169**	**64PKA176**	
36″ (539-816)	**64PKA059A**	**64PKA168**	**64PKA062A**	**64PKA178**
40″ (539-817)	**64PKA171**	**64PKA061A**	**64PKA063A**	**64PKA064A**
44" (42") (539-815)	**64PKA173**		**64PKA177**	

Milling Packages

Electro-Magnetic ABSOLUTE DRO Packages for Milling Machines

3 Axis (Quill) - AT715 Slim Electromagnetic for all axes

New Part Numbers

Order No.	Description
64PKA065A	MILL pkg, 3-axis, ABS Scales, 12″ x 30″ x 6″ w/3 axis KA-200 Counter (174-185A)
64PKA066A	MILL pkg, 3-axis, ABS Scales, 12″ x 36″ x 6″,w/3 axis KA-200 Counter (174-185A)
64PKA067A	MILL pkg, 3-axis, ABS Scales, 16″ x 36″ x 6″ w/3 axis KA-200 Counter (174-185A)
64PKA179	MILL PKG,3-AXIS, ABS SCALES 32" X 14" X 4" w/3 axis KA-200 Counter (174-185A)
64PKA180	MILL PKG,3-AXIS, ABS SCALES 36" X 14" X 4" w/3 axis KA-200 Counter (174-185A)
64PKA181	MILL PKG,3-AXIS, ABS SCALES 36" X 16" X 4" w/3 axis KA-200 Counter (174-185A)
64PKA182	MILL PKG,3-AXIS, ABS SCALES 30" X 14" X 6" w/3 axis KA-200 Counter (174-185A)
64PKA183	MILL PKG,3-AXIS, ABS SCALES 32" X 14" X 6" w/3 axis KA-200 Counter (174-185A)
64PKA184	MILL PKG,3-AXIS, ABS SCALES 36" X 14" X 6" w/3 axis KA-200 Counter (174-185A)
64PKA185	MILL PKG,3-AXIS, ABS SCALES 32" X 16" X 6" w/3 axis KA-200 Counter (174-185A)
64PKA186	MILL PKG,3-AXIS, ABS SCALES 40" X 18" X 6" w/3 axis KA-200 Counter (174-185A)
64PKA213	MILL PKG,3-AXIS, ABS SCALES 40" X 16" X 5" w/3 axis KA-200 Counter (174-185A)
64PKA216	MILL PKG,3-AXIS, ABS SCALES 40" X 12" X 5" w/3 axis KA-200 Counter (174-185A)
64PKA217	MILL PKG,3-AXIS, ABS SCALES 48" X 18" X 18" w/3 axis KA-200 Counter (174-185A)
64PKA218	MILL PKG,3-AXIS, ABS SCALES 60" X 24" X 28" w/3 axis KA-200 Counter (174-185A)
64PKA219	MILL PKG,3-AXIS, ABS SCALES 80" X 32" X 28" w/3 axis KA-200 Counter (174-185A)
64PKA225	MILL PKG,3-AXIS, ABS SCALES 48" X 18" X 22" w/3 axis KA-200 Counter (174-185A)

3 Axis (Knee) - AT715 Slim Electromagnetic for all axes

New Part Numbers

Order No.	Description
64PKA187	MILL PKG,3-AXIS, ABS SCALES 32" X 13"/14" X 16" w/3 axis KA-200 Counter (174-185A)
64PKA188	MILL PKG,3-AXIS, ABS SCALES 36" X 13"/14" X 16" w/3 axis KA-200 Counter (174-185A)
64PKA189	MILL PKG,3-AXIS, ABS SCALES 30" X 14" X 16" w/3 axis KA-200 Counter (174-185A)
64PKA190	MILL PKG,3-AXIS, ABS SCALES 36" X 16" X 16" w/3 axis KA-200 Counter (174-185A)
64PKA191	MILL PKG,3-AXIS, ABS SCALES 36" X 16" X 18" w/3 axis KA-200 Counter (174-185A)
64PKA192	MILL PKG,3-AXIS, ABS SCALES 40" X 18" X 16" w/3 axis KA-200 Counter (174-185A)
64PKA193	MILL PKG,3-AXIS, ABS SCALES 40" X 18" X 18" w/3 axis KA-200 Counter (174-185A)
64PKA209	MILL PKG,3-AXIS, ABS SCALES 32" X 16" X 16" w/3 axis KA-200 Counter (174-185A)
64PKA214	MILL PKG,3-AXIS, ABS SCALES 30" X 12" X 16" w/3 axis KA-200 Counter (174-185A)
64PKA215	MILL PKG,3-AXIS, ABS SCALES 40" X 12" X 16" w/3 axis KA-200 Counter (174-185A)

Mitutoyo

Lathe Packages

Electro-Magnetic ABSOLUTE DRO/Glass Linear Scale Packages for Lathe System

Using KA-200 Counter, AT116 and AT715 Linear Scales

5 Year Warranty
Digital Readout Packages
Mitutoyo

2 Axis, KA-200 Counter Lathe System

Package Includes:

- KA-200 Counter
- AT116 and AT715 Linear Scale combinations
- Bracket Kit (refer to page 15)
- Counter Stand
- Counter Tray
- Extension Cable (X axis) in kits 60″ and longer

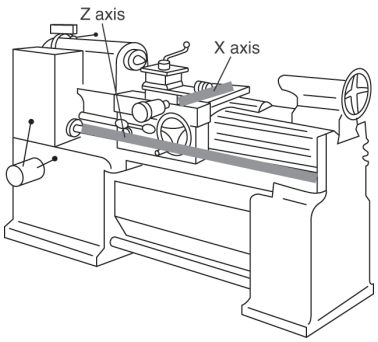

Lathe Machine System Packages

New Part Numbers

Z axis travel	X Axis Travel (AT116 Slim Glass Scale)					
	6″(539-272-30)	8″(539-273-30)	10″(539-274-30)	12″(539-275-30)	14″(539-276-30)	16″(539-277-30)
28″ (539-813)	**64PKA035A**	–	–	–	–	–
30″ (539-814)	**64PKA036A**	–	–	–	–	–
36″ (539-816)	**64PKA037A**	**64PKA194**	–	–	–	–
40″ (539-817)	**64PKA038A**	**64PKA039A**	**64PKA042A**	**64PKA046A**	**64PKA052A**	–
44″ (539-818)	–	**64PKA040A**	**64PKA043A**	**64PKA047A**	**64PKA053A**	–
48″ (539-819)	–	**64PKA041A**	**64PKA044A**	**64PKA048A**	**64PKA054A**	–
52″ (539-820)	–	**64PKA195**	**64PKA198**	**64PKA049A**	**64PKA055A**	–
60″ (539-822)	–	**64PKA196**	**64PKA045A**	**64PKA050A**	**64PKA056A**	**64PKA057A**
68" (65")		**64PKA220**		**64PKA200**		
72″ (539-825)	–	–	–	**64PKA051A**	–	–
80"		**64PKA197**	**64PKA199**	**64PKA210**	**64PKA203**	
88" (84")			**64PKA223***	**64PKA201**		
96" (90")					**64PKA222**	
120"			**64PKA211***	**64PKA202***	**64PKA224/64PKA204***	**64PKA205***

* indicates Z axis is AT103 series (Glass Linear Scale) instead of AT715. AT103 has a larger cross-section vs AT715.

Grinding Packages

High-accuracy Glass Linear Scale Packages for Grinding Machines

Using KA-200 Counter and AT116 Linear Scales

5 Year Warranty
Digital Readout Packages
Mitutoyo

2-axis, KA-200 Counter Grinding System

Package Includes:

- KA-200 Counter
- AT116 Glass Linear Scales
- Bracket Kit (refer to page 19)
- Display Arm Kit

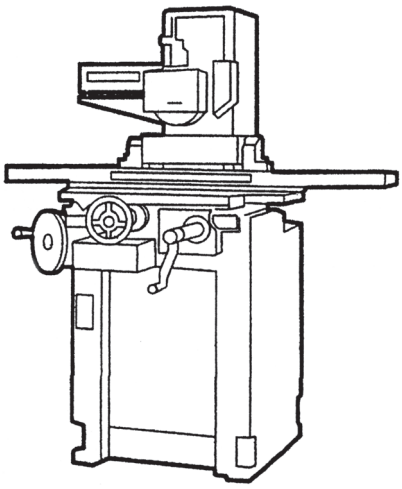

Grinding Machine System Packages

New Part Numbers

Vertical	Cross Side (AT116 Slim Glass Scale)				
	6″ (539-272-30)	8″ (539-273-30)	10″ (539-274-30)	12″ (539-275-30)	14″(539-276-30)
12″(539-275-30)	**64PKA026A**	**64PKA028A**	–	–	
14″(539-276-30)	**64PKA027A**	**64PKA029A**	–	–	
16″(539-277-30)	–	**64PKA030A**	–	–	
18″(539-278-30)	**64PKA206**	**64PKA212**	**64PKA031A**	**64PKA033A**	
20″(539-279-30)	–	–	–	**64PKA034A**	
24″(539-281-30)	–	–	**64PKA032A**	**64PKA207**	**64PKA208**

Also available with AT715 Electromagnetic Linear Scales with IP-67 rating (highest contamination resistance).
Contact your Mitutoyo representative for ordering information.

Applications

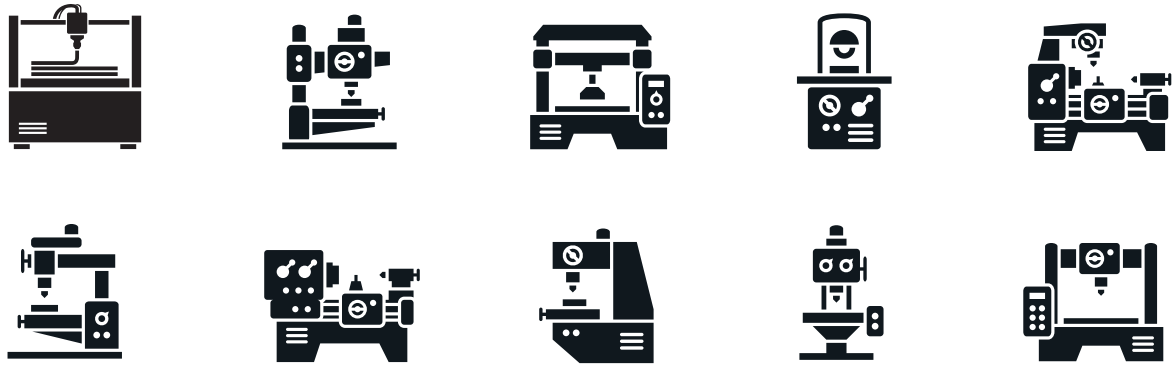

© 2021 Mitutoyo America Corporation

Coordinate Measuring Machines

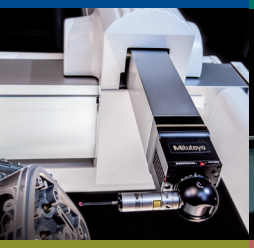

Vision Measuring Systems

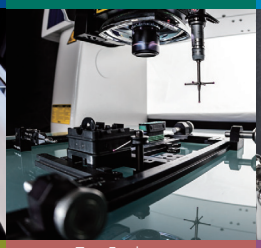

Form Measurement

Optical Measuring

Sensor Systems

Test Equipment and Seismometers

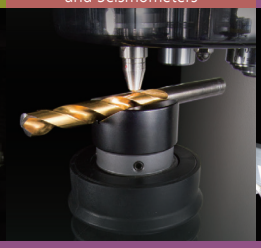

Digital Scale and DRO Systems

Small Tool Instruments and Data Management

Whatever your challenges are, Mitutoyo supports you from start to finish.

Mitutoyo is not only a manufacturer of top-quality measuring products but one that also offers qualified support for the lifetime of the equipment, backed by comprehensive services that ensure your staff can make the very best use of the investment.

Apart from the basics of calibration and repair, Mitutoyo offers product and metrology training, as well as IT support for the sophisticated software used in modern measuring technology. We can also design, build, test and deliver measuring solutions and even, if deemed cost-effective, take your critical measurement challenges in-house on a sub-contract basis.

Find additional product literature and our product catalog

www.mitutoyo.com

Note: All information regarding our products, and in particular the illustrations, drawings, dimensional and performance data contained in this printed matter as well as other technical data are to be regarded as approximate average values. We therefore reserve the right to make changes to the corresponding designs. The stated standards, similar technical regulations, descriptions and illustrations of the products were valid at the time of printing. In addition, the latest applicable version of our General Trading Conditions will apply. Only quotations submitted by ourselves may be regarded as definitive. Specifications are subject to change without notice.

Mitutoyo products are subject to US Export Administration Regulations (EAR). Re-export or relocation of our products may require prior approval by an appropriate governing authority.

Trademarks and Registrations
Designations used by companies to distinguish their products are often claimed as trademarks. In all instances where Mitutoyo America Corporation is aware of a claim, the product names appear in initial capital or all capital letters. The appropriate companies should be contacted for more complete trademark and registration information.

Mitutoyo

Mitutoyo America Corporation
www.mitutoyo.com
One Number to Serve You Better
1-888-MITUTOYO (1-888-648-8869)

M³ Solution Centers:
Aurora, Illinois (Headquarters)
Boston, Massachusetts
Huntersville, North Carolina
Mason, Ohio
Plymouth, Michigan
City of Industry, California
Birmingham, Alabama
Renton, Washington
Houston, Texas

0221-01 • Printed in USA • Feb 2021

AMI
Automation and Metrology
1-888-354-2525
auto-met.com