Ultra-compact, Separate Type Linear Scale Units

ST46-EZA Series

Bulletin No. 2123

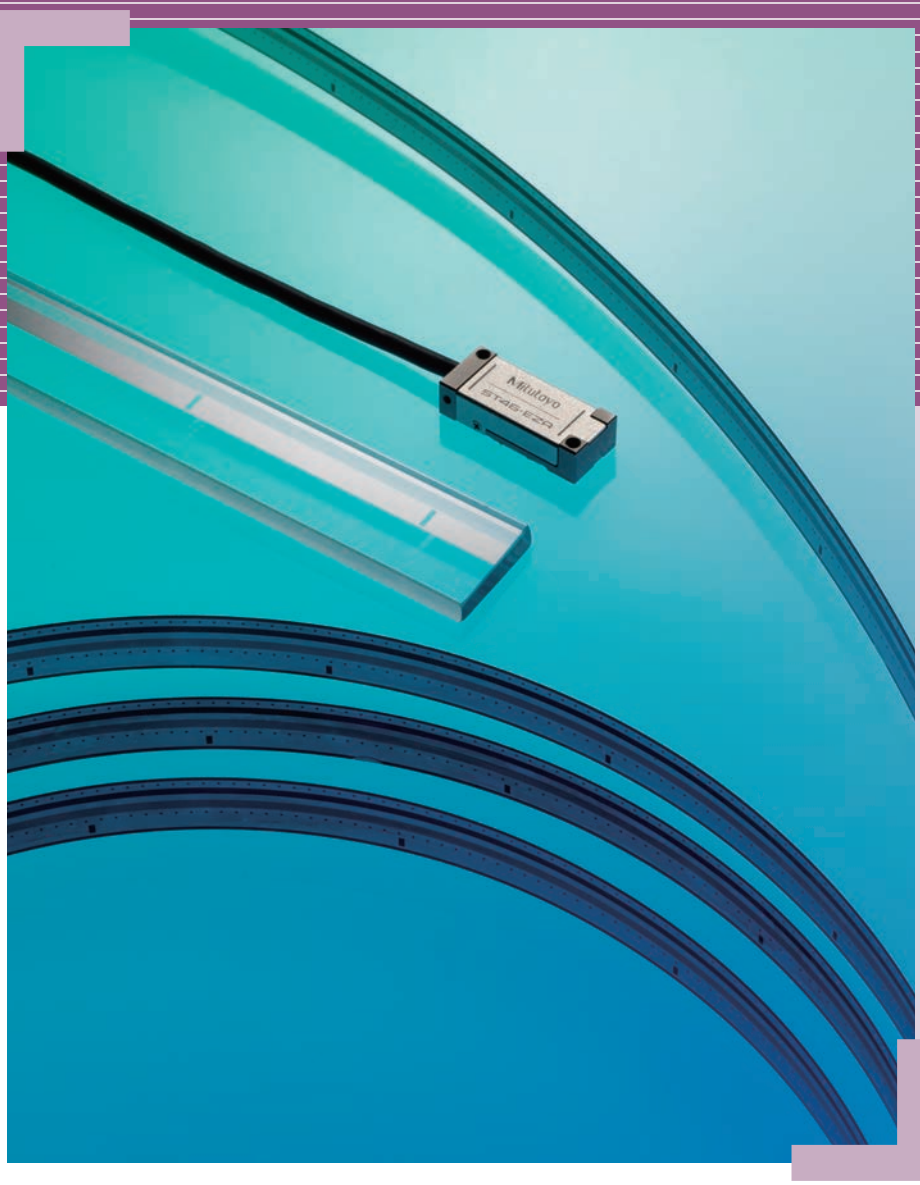

Highly accurate glass or metal-tape scales with ultra-compact detector head and an automatic signal-adjusting function for ease of installation

Mitutoyo

AMI
Automation and Metrology
8808 Tyler Blvd, Mentor, OH 44060
1-888-354-2525 | sales@auto-met.com
Request a quote: auto-met.com

Ultra-compact, Separate Type Linear Scale Units

ST46-EZA Series

Features

- Includes an automatic adjusting function for the signal (EZA function) at the push of a button
- The setup indicator included in the connector shell can confirm signal strength without an oscilloscope or PC when mounting the detector head
- Signal strength can be checked and parameters set by connecting with a PC (application program option)
- I/F circuit built-in to the connector shell to save space
- The thickness of the detector head is only 7.5 mm
  The metal tape scale type has a mounting surface area of 12.5 by 9.325 mm, allowing use in applications where space saving design is important

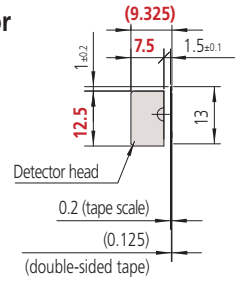

Mounting a cross-sectional view

- Glass scale and metal tape scale product lines

- Application programs
  (Option: Part No. 06AEF800)

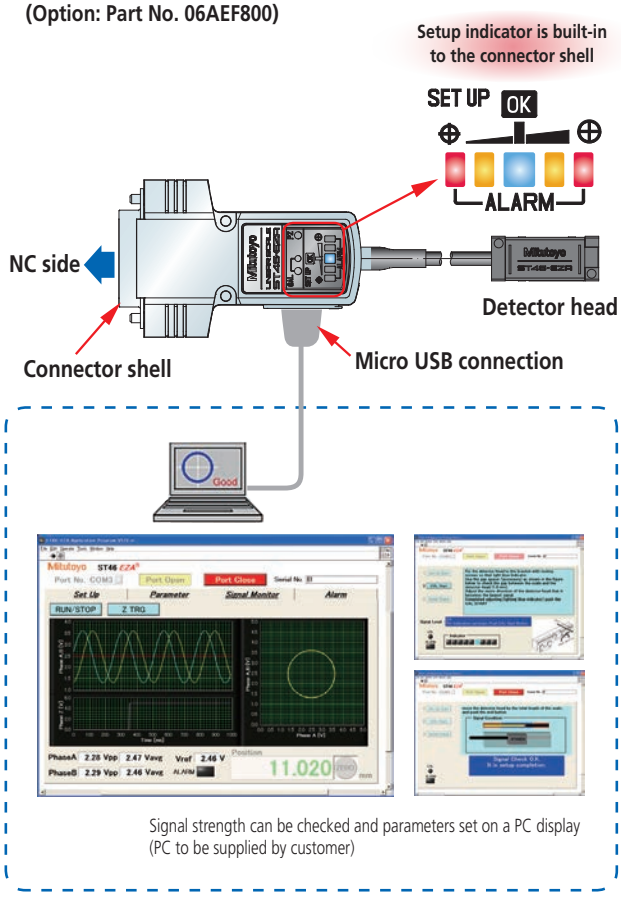

Signal strength can be checked and parameters set on a PC display
(PC to be supplied by customer)

Mitutoyo

Glass scale
type

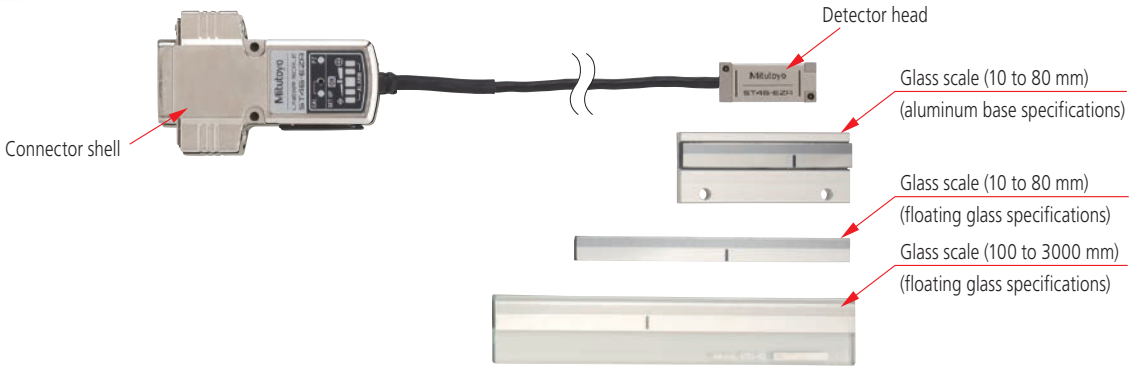

Metal tape scale
type

Double-end fixing design

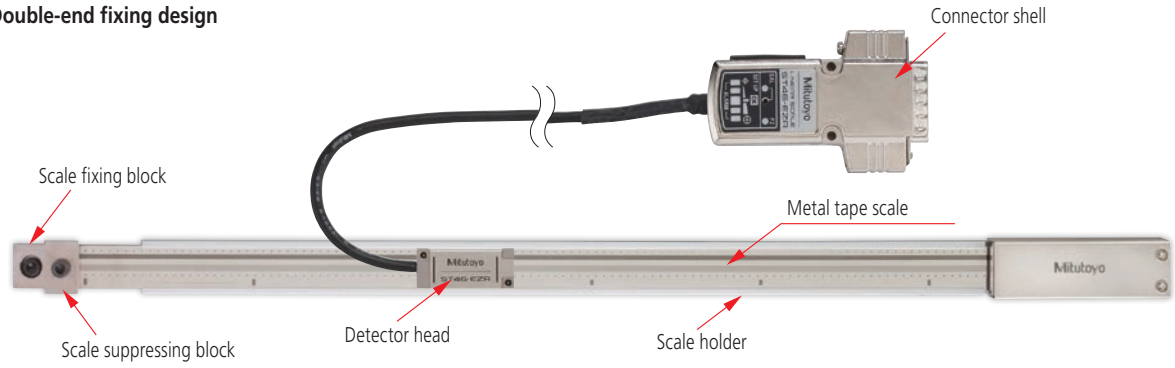

Adhesive tape fixing design

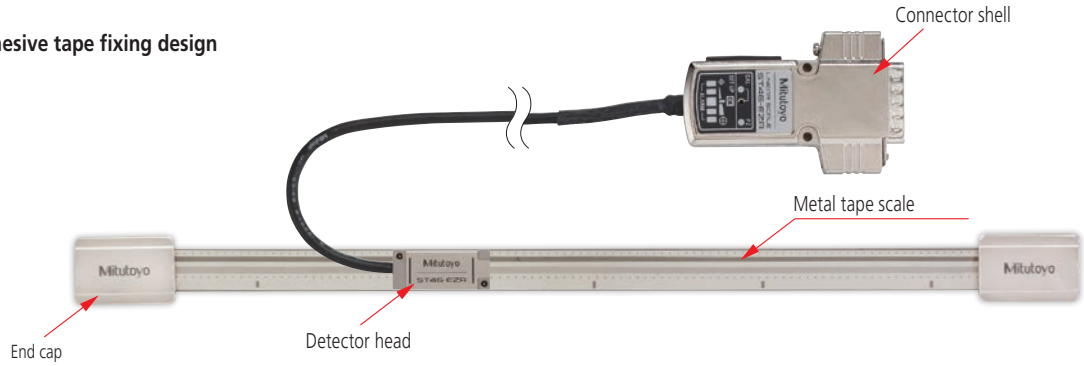

Common specifications

Specifications

Item / Code	ST46-EZA	
Detection method	Reflective photoelectric linear encoder	
Scale type	Glass	Metal tape
Main scale grating pitch	20μm	
Output signal	Type B: 2-phase square wave signals, reference point pulse, external reset input Type C: 2-phase square wave signals, reference point pulse, 2-phase sinusoidal signals	
Effective range	10 to 3000mm	
Accuracy (20°C)	Effective range 10 to 300mm: ±1μm Effective range 350 to 500mm: ±2μm Effective range 600 to 1000mm: ±3μm Effective range 1100 to 3000mm: ±3μm/m	Effective range 10 to 1000mm: ±5μm Effective range 1100 to 3000mm: ±5μm/m (The above accuracy applies to individual scales. For double-end fixing designs, perform point-to-point correction after ensuring the metal tape is tensioned correctly.)
Thermal expansion coefficient	(8±1) 10^{-6}/°C	(11.5±1)10^{-6}/°C (This value is similar to that of steel.)
Scale reference point	50mm pitch, 10 to 80mm: Center point	
Maximum response speed	2.6m/s (at sine wave amplitude -3dB)	
Power supply voltage	5VDC±5%	
Maximum current consumption	250mA	
Operating temperature/ humidity	0 to 40°C, 20 to 80%RH (no condensation)	
Storage temperature/ humidity	-20 to 60°C, 20 to 80%RH (no condensation)	

Output specification

- Connector pin assignment (Type B)

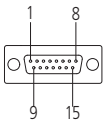

Applicable connector (included) HDAB-15S

Pin No.	Signal	Pin No.	Signal
1, 2	0V (GND)	10	PA (main signal pulse_Normal phase)
3, 4	+5V (Vcc)	11	$\overline{PA}$ (main signal pulse_Reverse phase)
5	Reset input AL (anode)	12	PB (main signal pulse_Normal phase)
6	Reset input AL (cathode)	13	$\overline{PB}$ (main signal pulse_Reverse phase)
7	NC	14	$\overline{PZ}$ (reference point pulse_Reverse phase)
8	PZ (reference point pulse_Normal phase)	15	F. G
9	$\overline{ALM}$ (alarm)		

- Connector pin assignment (Type C)

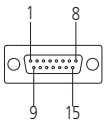

Applicable connector (included) HDAB-15S

Pin No.	Signal	Pin No.	Signal
1, 2	0V (GND)	10	PA (main signal pulse_Normal phase)
3, 4	+5V (Vcc)	11	$\overline{PA}$ (main signal pulse_Reverse phase)
5	Phase A (sinusoidal signal)	12	PB (main signal pulse_Normal phase)
6	Phase B (sinusoidal signal)	13	$\overline{PB}$ (main signal pulse_Reverse phase)
7	Vref (≒ Vcc / 2)	14	$\overline{PZ}$ (reference point pulse_Reverse phase)
8	PZ (reference point pulse_Normal phase)	15	F. G
9	$\overline{ALM}$ (alarm)		

System Configuration

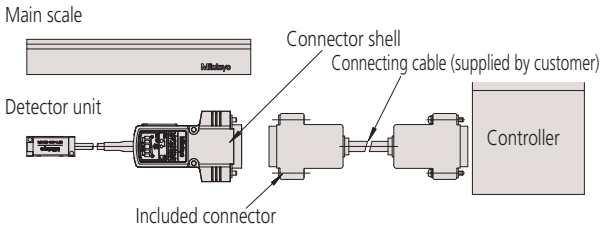

Output signal waveform and specification

- 2-phase square wave signals (Type B)

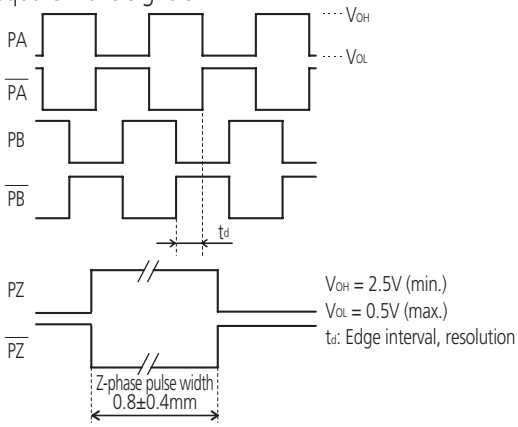

- 2-phase sinusoidal signals, 2-phase square wave signals (Type C)

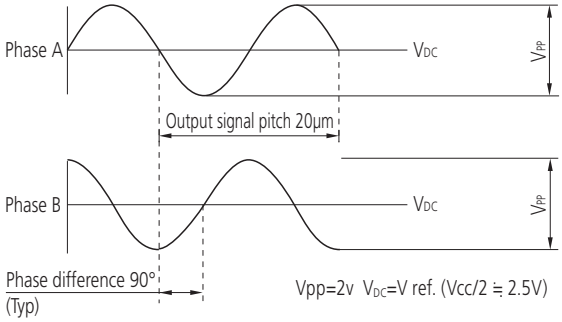

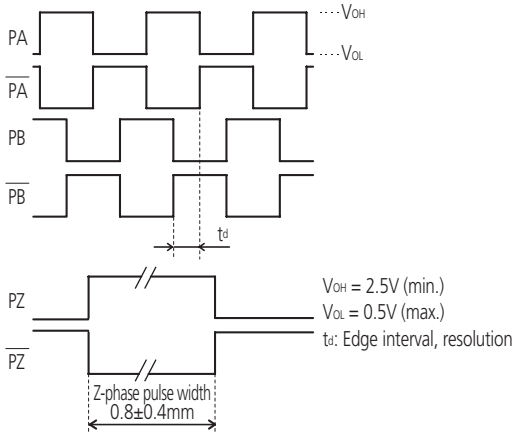

Mitutoyo

Specifying Your Scale

- There is a wide range of specifications available for the ST46-EZA.
- To specify the scale you require for your application, simply construct the appropriate code by following the pattern described below.
  However, if standard specifications (recommended items marked with ● symbol below) meet your requirements then you don't need to do this. Just use the appropriate code number as given in the Standard Unit Codes tables on the next pages.

How to read the code

ST46-EZA □ - □□□□□ - □□□□□

Signal output

Code	Details
B	Square wave signal + external reset input
C	Sinusoidal signal + Square wave signal

Effective range

Code	Effective range (mm)	Code	Effective range (mm)	Code	Effective range (mm)
0010	10	0450	450	1600	1600
0025	25	0500	500	1700	1700
0050	50	0600	600	1800	1800
0075	75	0700	700	2000	2000
0080	80	0800	800	2200	2200
0100	100	0900	900	2400	2400
0150	150	1000	1000	2500	2500
0200	200	1100	1100	2600	2600
0250	250	1200	1200	2800	2800
0300	300	1300	1300	3000	3000
0350	350	1400	1400		
0400	400	1500	1500		

* For the standard specification, the indicated effective range depends on the product code.
* For standard specifications, refer to the scale dimensions diagram.

Scale shape / Reference point

Code	Scale shape - Cross-section (Effective range)	Reference point (Effective range)
●A	Glass, separate: t4.8 x w22 (100 to 3000mm)	50mm pitch (100 to 3000mm)
●B	Glass, separate: t2.8 x w8 (10 to 80mm)	Center point (10 to 80mm)
●C	Glass, with aluminum base: t5.1 x w23 (10 to 80mm)	Center point (10 to 80mm)
D	Metal tape, Double-end fixing design t0.2 x w13 (500 to 3000mm)	50mm pitch
E	Metal tape, Double-sided tape fixing design t0.2 x w13 (10 to 3000mm)	Center point (10 to 80mm) 50m pitch (100 to 3000mm)
Z	Special shape	Special position specification

Resolution / Minimum edge interval

Code	Resolution	Minimum edge interval	Maximum response speed
A	0.05 µm	100 ns	450 mm/s
B		200 ns	225 mm/s
C		400 ns	112 mm/s
D		800 ns	56 mm/s
E	0.1 µm	100 ns	900 mm/s
●F		200 ns	450 mm/s
G		400 ns	225 mm/s
H		800 ns	112 mm/s
J	0.5 µm	100 ns	2600 mm/s
K		200 ns	2250 mm/s
L		400 ns	1125 mm/s
M		800 ns	562 mm/s
N	1 µm	100 ns	2600 mm/s
P		200 ns	2600 mm/s
Q		400 ns	2250 mm/s
R		800 ns	1125 mm/s
S	5 µm	100 ns	2600 mm/s
T		200 ns	2600 mm/s
U		400 ns	2600 mm/s
V		800 ns	2600 mm/s

Special codes

Code	Details
●None	Standard selection specification
Z	Special specification

Head cable length

Code	Length
●A	1m (standard)
B	0.5m
C	2m
Z	Special length specification (max. 2.5m)

Alarm output

Code	Details
●S	Alarm signal
H	High impedance

Direction

Code	Details
●1	Normal
2	Reverse

When the direction is normal, the sinusoidal signal, the 2-phase square wave output signal (Phase A, Phase B) and the reference point signal waveform are as shown below.

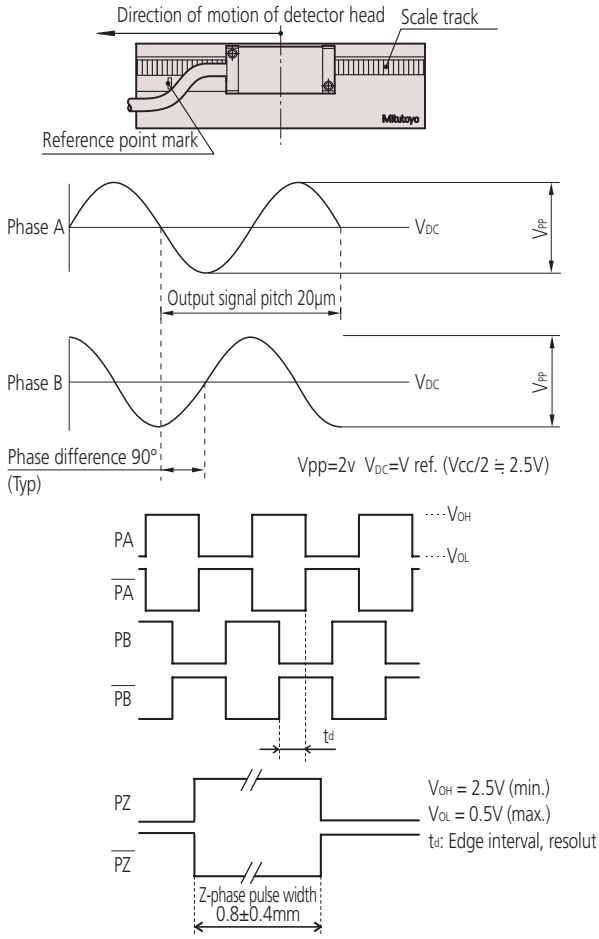

ST46-EZA scale unit mounting dimensions (Glass scale type)

• Effective range 100 to 3000mm

Unit: mm

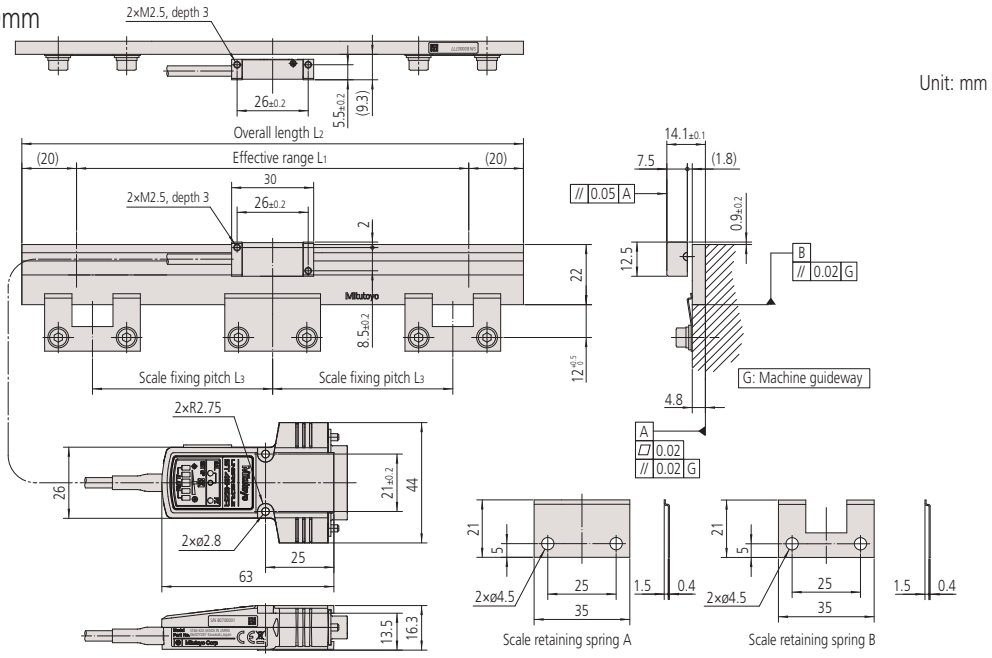

Standard Unit Codes

Order No.	Code	Effective range L1 (mm)	Overall length L2 (mm)	Scale fixing pitch L3 (mm)	Scale retaining spring A (pcs.)	Scale retaining spring B (pcs.)
579-670-□1	**ST46EZA◇- 100A**	100	140	50		2
579-671-□1	**ST46EZA◇- 150A**	150	190	75		2
579-672-□1	**ST46EZA◇- 200A**	200	240	100		2
579-673-□1	**ST46EZA◇- 250A**	250	290	60		4
579-674-□1	**ST46EZA◇- 300A**	300	340	75		4
579-675-□1	**ST46EZA◇- 350A**	350	390	85		4
579-676-□1	**ST46EZA◇- 400A**	400	440	100		4
579-677-□1	**ST46EZA◇- 450A**	450	490	75		6
579-678-□1	**ST46EZA◇- 500A**	500	540	80		6
579-679-□1	**ST46EZA◇- 600A**	600	640	100		6
579-680-□1	**ST46EZA◇- 700A**	700	740	85		8
579-681-□1	**ST46EZA◇- 800A**	800	840	100		8
579-682-□1	**ST46EZA◇- 900A**	900	940	90		10
579-683-□1	**ST46EZA◇-1000A**	1000	1040	100		10
579-684-□1	**ST46EZA◇-1100A**	1100	1140	90	1	12
579-685-□1	**ST46EZA◇-1200A**	1200	1240	100		12
579-686-□1	**ST46EZA◇-1300A**	1300	1340	130		10
579-687-□1	**ST46EZA◇-1400A**	1400	1440	100		14
579-688-□1	**ST46EZA◇-1500A**	1500	1540	125		12
579-689-□1	**ST46EZA◇-1600A**	1600	1640	100		16
579-690-□1	**ST46EZA◇-1700A**	1700	1740	120		14
579-691-□1	**ST46EZA◇-1800A**	1800	1840	100		18
579-692-□1	**ST46EZA◇-2000A**	2000	2040	100		20
579-693-□1	**ST46EZA◇-2200A**	2200	2240	100		22
579-694-□1	**ST46EZA◇-2400A**	2400	2440	100		24
579-695-□1	**ST46EZA◇-2500A**	2500	2540	95		26
579-696-□1	**ST46EZA◇-2600A**	2600	2640	100		26
579-697-□1	**ST46EZA◇-2800A**	2800	2840	100		28
579-698-□1	**ST46EZA◇-3000A**	3000	3040	100		30

* The above order numbers are for recommended items marked with ● symbol. If recommended specifications meet your requirements, please use these code numbers to order.
◇ → B (2-phase square wave signals + external reset input): □ → 1
◇ → C (2-phase square wave signals + 2-phase sinusoidal signals): □ → 2

• Effective range 10 to 80mm (Without aluminum base)

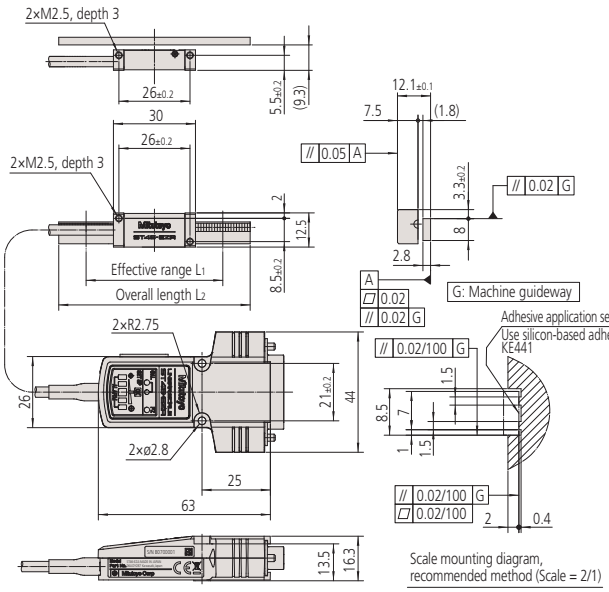

• Effective range 10 to 80mm (With aluminum base)

Unit: mm

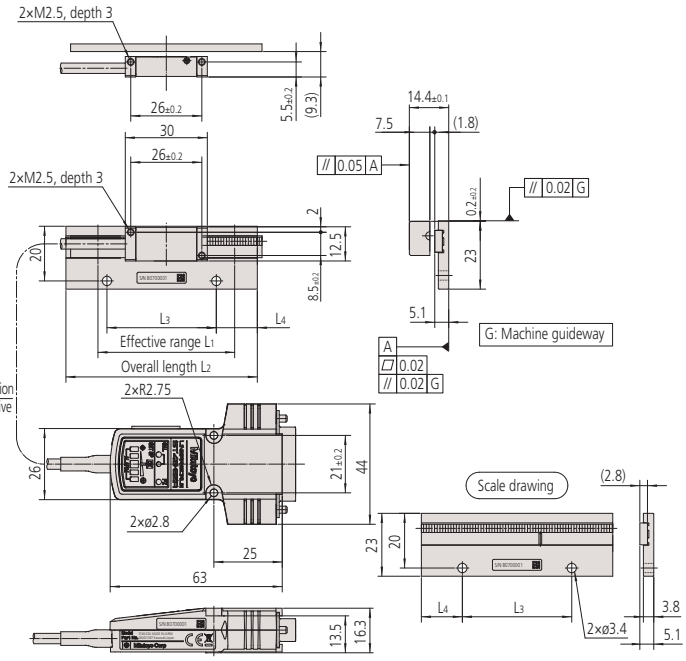

Standard Unit Codes

• 10 to 80mm (Without aluminum base)

Order No.	Code	Effective range L_1 (mm)	Overall length L_2 (mm)
579-665-12	**ST46EZAB-10B**	10	30
579-666-12	**ST46EZAB-25B**	25	45
579-667-12	**ST46EZAB-50B**	50	70
579-668-12	**ST46EZAB-75B**	75	90
579-669-12	**ST46EZAB-80B**	80	100
579-665-22	**ST46EZAC-10B**	10	30
579-666-22	**ST46EZAC-25B**	25	45
579-667-22	**ST46EZAC-50B**	50	70
579-668-22	**ST46EZAC-75B**	75	90
579-669-22	**ST46EZAC-80B**	80	100

• 10 to 80 mm (With aluminum base)

Order No.	Code	Effective range L_1 (mm)	Overall length L_2 (mm)	L_3 (mm)	L_4 (mm)
579-665-13	**ST46EZAB-10C**	10	30	15	7.5
579-666-13	**ST46EZAB-25C**	25	45	25	10
579-667-13	**ST46EZAB-50C**	50	70	40	15
579-668-13	**ST46EZAB-75C**	75	90	60	15
579-669-13	**ST46EZAB-80C**	80	100	70	15
579-665-23	**ST46EZAC-10C**	10	30	15	7.5
579-666-23	**ST46EZAC-25C**	25	45	25	10
579-667-23	**ST46EZAC-50C**	50	70	40	15
579-668-23	**ST46EZAC-75C**	75	90	60	15
579-669-23	**ST46EZAC-80C**	80	100	70	15

Mitutoyo

ST46-EZA scale unit mounting dimensions (Metal tape scale type)

Double-end fixing design (effective range 500 to 1000 mm)

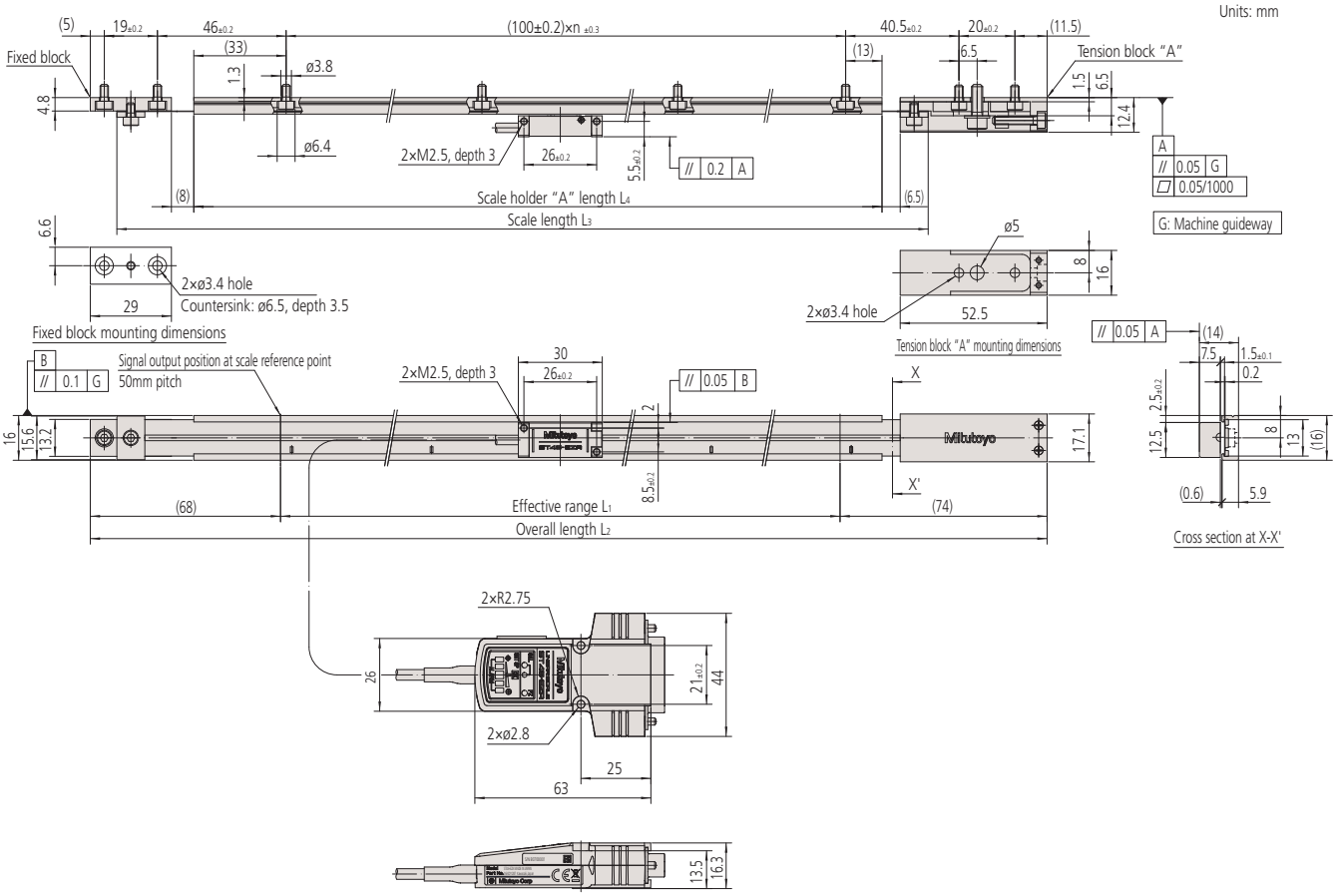

Standard Unit Codes

Order No.	Code	Effective range L1 (mm)	Overall length L2 (mm)	Scale length L3 (mm)	Scale Holder "A" length L4 (mm)	n
579-678-□4	**ST46EZA◇- 500D**	500	642	590	546	5
579-679-□4	**ST46EZA◇- 600D**	600	742	690	646	6
579-680-□4	**ST46EZA◇- 700D**	700	842	790	746	7
579-681-□4	**ST46EZA◇- 800D**	800	942	890	846	8
579-682-□4	**ST46EZA◇- 900D**	900	1042	990	946	9
579-683-□4	**ST46EZA◇-1000D**	1000	1142	1090	1046	10

* The above order numbers are for recommended items marked with ● symbol. If recommended specifications meet your requirements, please use these code numbers to order.
◇ → B (2-phase square wave signals + external reset input): □ → 1
◇ → C (2-phase square wave signals + 2-phase sinusoidal signals): □ → 2

● Double-end fixing design (effective range 1100 to 3000 mm)

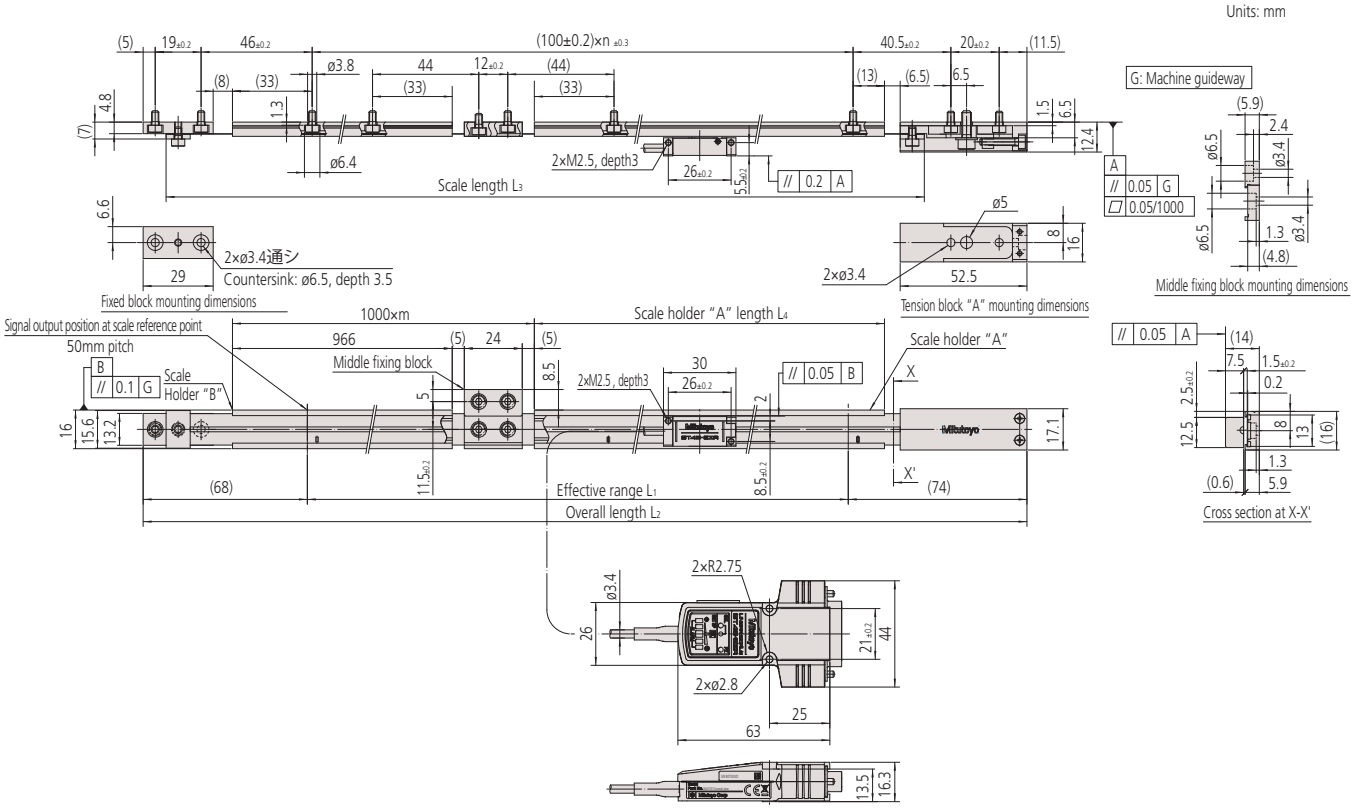

Standard Unit Codes

Order No.	Code	Effective range L1 (mm)	Overall length L2 (mm)	Scale length L3 (mm)	Scale Holder "A" length L4 (mm)	m	n
579-684-□4	**ST46EZA◇-1100D**	1100	1242	1190	146	1	11
579-685-□4	**ST46EZA◇-1200D**	1200	1342	1290	246	1	12
579-686-□4	**ST46EZA◇-1300D**	1300	1442	1390	346	1	13
579-687-□4	**ST46EZA◇-1400D**	1400	1542	1490	446	1	14
579-688-□4	**ST46EZA◇-1500D**	1500	1642	1590	546	1	15
579-689-□4	**ST46EZA◇-1600D**	1600	1742	1690	646	1	16
579-690-□4	**ST46EZA◇-1700D**	1700	1842	1790	746	1	17
579-691-□4	**ST46EZA◇-1800D**	1800	1942	1890	846	1	18
579-692-□4	**ST46EZA◇-2000D**	2000	2142	2090	1046	1	20
579-693-□4	**ST46EZA◇-2200D**	2200	2342	2290	246	2	22
579-694-□4	**ST46EZA◇-2400D**	2400	2542	2490	446	2	24
579-695-□4	**ST46EZA◇-2500D**	2500	2642	2590	546	2	25
579-696-□4	**ST46EZA◇-2600D**	2600	2742	2690	646	2	26
579-697-□4	**ST46EZA◇-2800D**	2800	2942	2890	846	2	28
579-698-□4	**ST46EZA◇-3000D**	3000	3142	3090	1046	2	30

* The above order numbers are for recommended items marked with ● symbol. If recommended specifications meet your requirements, please use these code numbers to order.
◇ → B (2-phase square wave signals + external reset input): □ → 1
◇ → C (2-phase square wave signals + 2-phase sinusoidal signals): □ → 2

ST46-EZA scale unit mounting dimensions (metal tape scale type)

● Adhesive tape fixing design

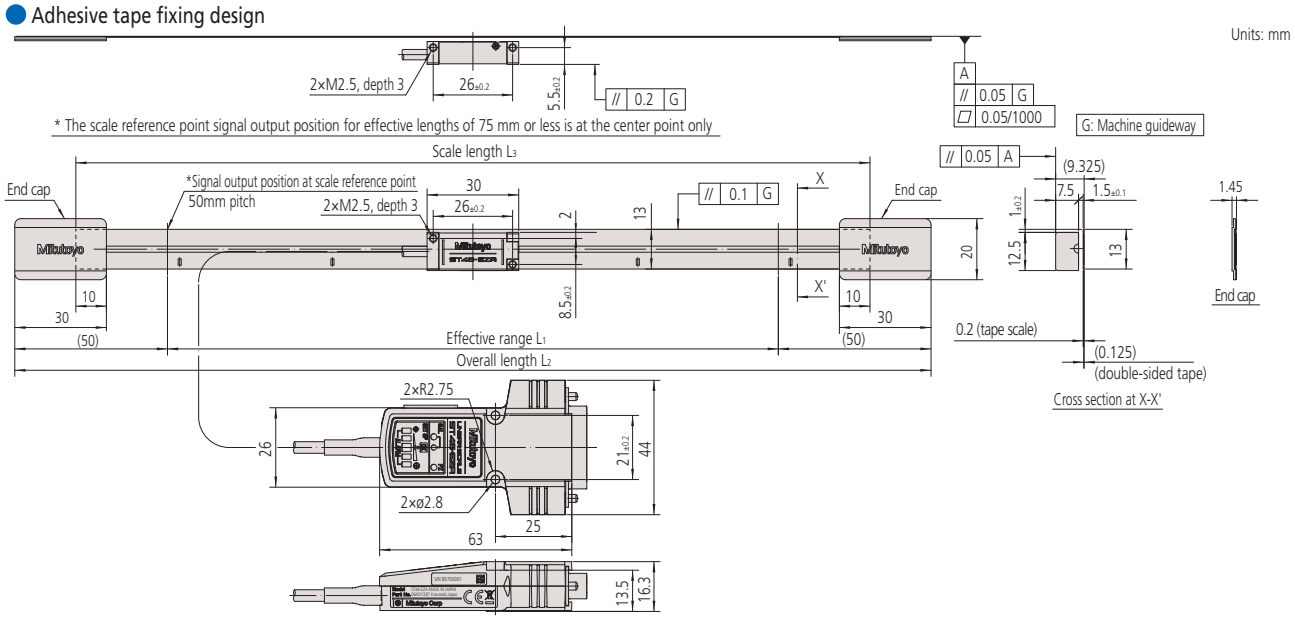

Standard Unit Codes

Order No.	Code	Effective range L1 (mm)	Overall length L2 (mm)	Scale length L3 (mm)
579-665-□5	ST46EZA◇- 10E	10	110	70
579-666-□5	ST46EZA◇- 25E	25	125	85
579-667-□5	ST46EZA◇- 50E	50	150	110
579-668-□5	ST46EZA◇- 75E	75	175	135
579-670-□5	ST46EZA◇- 100E	100	200	160
579-671-□5	ST46EZA◇- 150E	150	250	210
579-672-□5	ST46EZA◇- 200E	200	300	260
579-673-□5	ST46EZA◇- 250E	250	350	310
579-674-□5	ST46EZA◇- 300E	300	400	360
579-675-□5	ST46EZA◇- 350E	350	450	410
579-676-□5	ST46EZA◇- 400E	400	500	460
579-677-□5	ST46EZA◇- 450E	450	550	510
579-678-□5	ST46EZA◇- 500E	500	600	560
579-679-□5	ST46EZA◇- 600E	600	700	660
579-680-□5	ST46EZA◇- 700E	700	800	760
579-681-□5	ST46EZA◇- 800E	800	900	860
579-682-□5	ST46EZA◇- 900E	900	1000	960
579-683-□5	ST46EZA◇-1000E	1000	1100	1060
579-684-□5	ST46EZA◇-1100E	1100	1200	1160
579-685-□5	ST46EZA◇-1200E	1200	1300	1260
579-686-□5	ST46EZA◇-1300E	1300	1400	1360
579-687-□5	ST46EZA◇-1400E	1400	1500	1460
579-688-□5	ST46EZA◇-1500E	1500	1600	1560
579-689-□5	ST46EZA◇-1600E	1600	1700	1660
579-690-□5	ST46EZA◇-1700E	1700	1800	1760
579-691-□5	ST46EZA◇-1800E	1800	1900	1860
579-692-□5	ST46EZA◇-2000E	2000	2100	2060
579-693-□5	ST46EZA◇-2200E	2200	2300	2260
579-694-□5	ST46EZA◇-2400E	2400	2500	2460
579-695-□5	ST46EZA◇-2500E	2500	2600	2560
579-696-□5	ST46EZA◇-2600E	2600	2700	2660
579-697-□5	ST46EZA◇-2800E	2800	2900	2860
579-698-□5	ST46EZA◇-3000E	3000	3100	3060

* The above order numbers are for recommended items marked with ● symbol. If recommended specifications meet your requirements, please use these code numbers to order.
◇ → B (2-phase square wave signals + external reset input): □ → 1
◇ → C (2-phase square wave signals + 2-phase sinusoidal signals): □ → 2

Mitutoyo

Mitutoyo
ST45-E2R

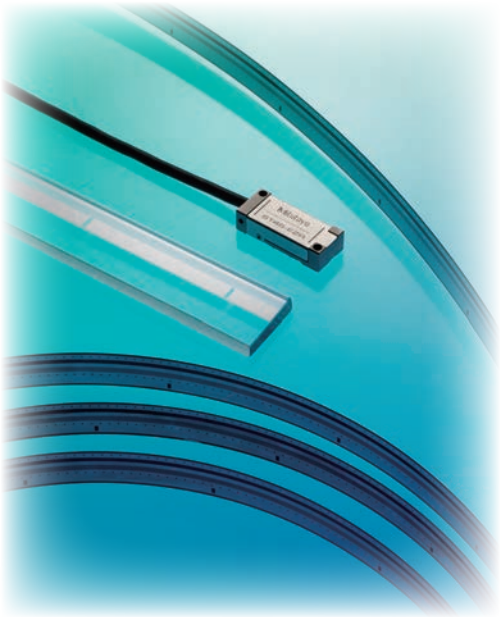

- Coordinate Measuring Machines
- Vision Measuring Systems
- Form Measurement
- Optical Measuring
- Sensor Systems
- Testing Equipment and Seismometer
- Digital Scale and DRO Systems
- Small Tool Instruments and Data Management

Mitutoyo America Corporation
www.mitutoyo.com

One Number to Serve You Better
1-888-MITUTOYO (1-888-648-8869)

M³ Solution Centers
Aurora, Illinois
(Corporate Headquarters)
Westford, Massachusetts
Huntersville, North Carolina
Mason, Ohio
Plymouth, Michigan
City of Industry, California
Birmingham, Alabama
Renton, Washington

Note: All information regarding our products, and in particular the illustrations, drawings, dimensional and performance data contained in this printed matter as well as other technical data are to be regarded as approximate average values. We therefore reserve the right to make changes to the corresponding designs. The stated standards, similar technical regulations, descriptions and illustrations of the products were valid at the time of printing. In addition, the latest applicable version of our General Trading Conditions will apply. Only quotations submitted by ourselves may be regarded as definitive.

Mitutoyo products are subject to US Export Administration Regulations (EAR). Re-export or relocation of Mitutoyo products may require prior approval by an appropriate governing authority.

Trademarks and Registrations
Designations used by companies to distinguish their products are often claimed as trademarks. In all instances where Mitutoyo America Corporation is aware of a claim, the product names appear in initial capital or all capital letters. The appropriate companies should be contacted for more complete trademark and registration information.

We reserve the right to change specifications and prices without notice.

Mitutoyo
Precision is our Profession

© 2013 Mitutoyo America Corporation, Aurora IL

1M 0713-05 • Printed in USA • July 2013

AMI
Automation and Metrology
1-888-354-2525
auto-met.com