HEIDENHAIN

Operating Instructions

ND 280

English (en)
11/2013

ND 280 screen

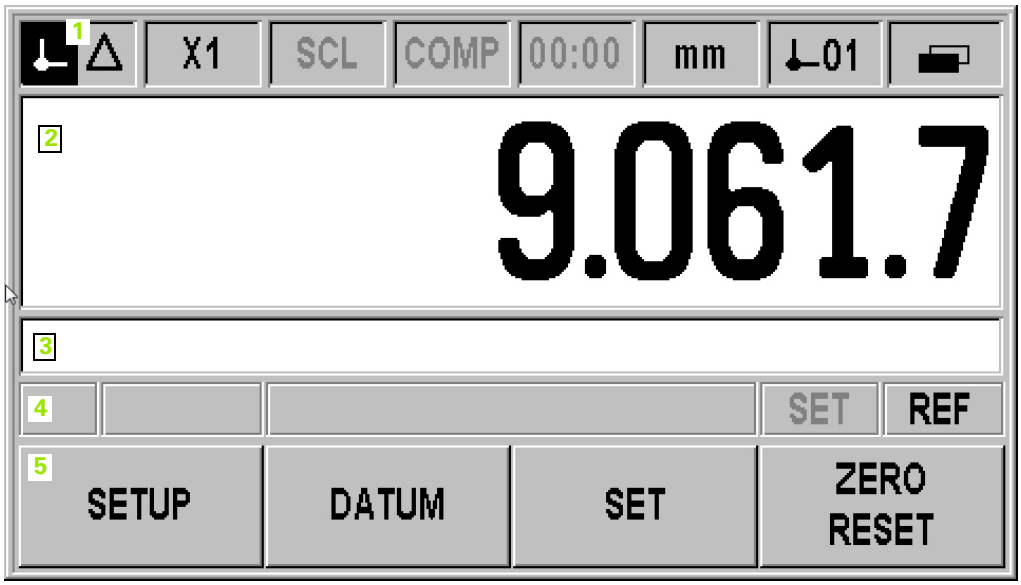

ND 280 front panel

Controls and displays

1	**Status bar**
	Current operating mode: Actual Value, Distance-To-Go
X1	Current display mode for input X1
SCL	SCL shown in black: Scaling factor is active
KORR	COMP shown in black: Error compensation or axis-error compensation is active for the currently displayed axis .
00:00	Elapsed time of running **stopwatch:** If the stopwatch is stopped, the box appears dimmed.
mm	mm, inch, DEG, DMS or rad: Currently active unit of measure
01	Currently active datum: The ND 280 allows you to work with two different datums.
	Indicates the soft-key page (soft-key row) you are currently on.
2	**Position display:** Current position value (length or angle)
3	**Message line** for displaying information, errors or warnings
4	**Status display**: ■ SET: If you enter a new value during datum setting, the SET symbol will start flashing. ■ REF: The REF symbol is flashing until the reference mark evaluation for the displayed axis has been completed (if an incremental encoder is connected).
5 and 6	**Soft keys** and **soft-key buttons** for executing functions
1,2,3,4...	**Numeric input keys**
ENTER	Use the ENTER key to confirm your entry or to return to the previous screen.
C	Use the C key to clear an entry, acknowledge an error message or return to the previous screen.
	The NAVIGATION key moves through the soft-key pages (soft-key rows).
7	Use the UP or DOWN arrow key to move between fields within a form or menu items (parameters) within a menu.

ND 280 rear panel

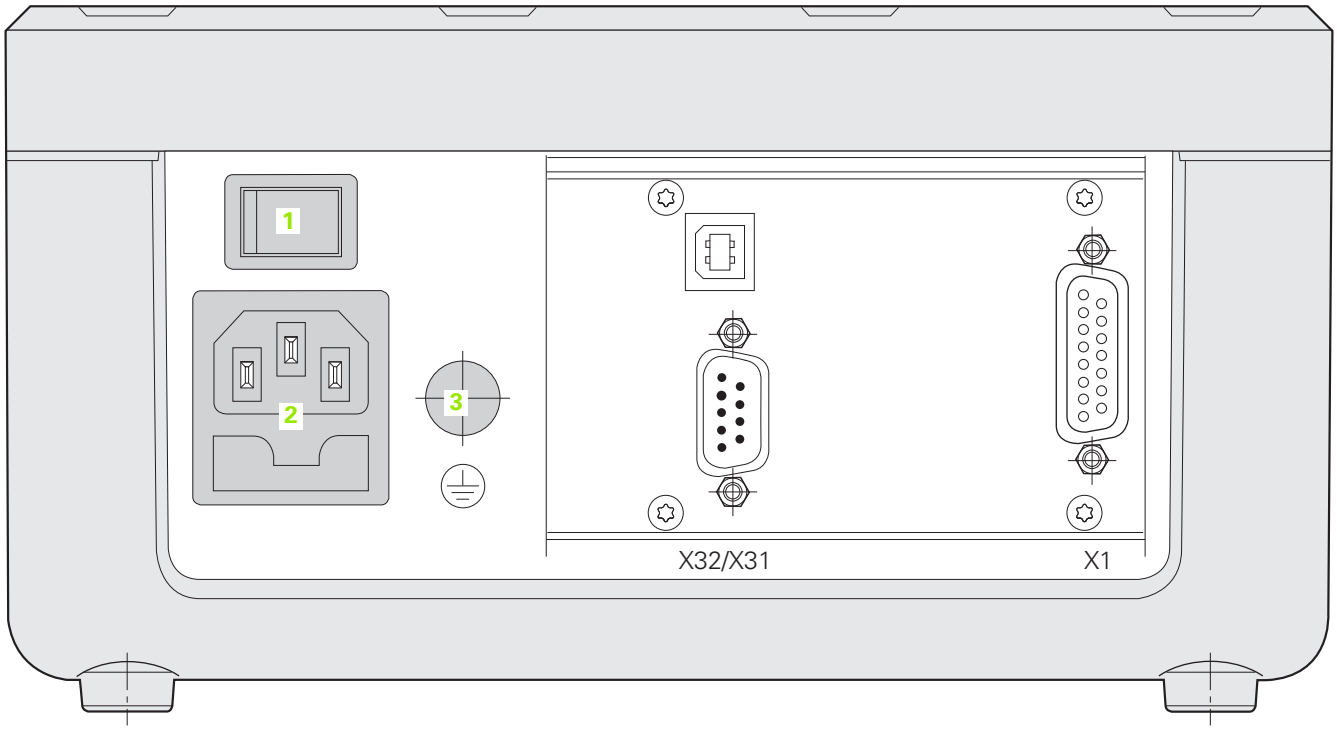

Connections

1	**Power switch**
2	**Power connection** with fuse
3	**Ground** (protective earthing)
X1	for a HEIDENHAIN encoder with **11 µApp**, **1 Vpp** or **EnDat interface (purely serial)**
X32/X31	**Two serial ports** for data transfer: **RS-232-C/V.24** (**X31**) and **USB Type B** (UART, **X32**)

Introduction

Software version

The software version is shown on the power-up screen of the ND 280.

This manual describes the functions that are available in the ND 280 and the installation of the units.

Symbols within notes

Every note is marked with a symbol on the left indicating to the operator the type and/or potential severity of the note.

General information

e. g. on the behavior of the ND 280.

Refer to accompanying documents

e.g. when a special tool is required for a function.

Danger to the operator, workpiece or internal components

e.g. danger of collision

Electrical hazard

e. g. danger of electrical shock when opening a housing.

The ND 280 must be prepared by a qualified and authorized technician to perform this function.

Fonts

The chart below shows how the different variables (soft keys, hard keys, forms and form fields) are represented within the text of this manual:

- Soft keys – SETUP soft key
- Hard keys – ENTER hard key
- Menus and forms – UNITS OF MEASURE form
- Parameters and input fields – ANGULAR field
- Data in fields - ON, OFF

I Working with the ND 280 position display unit 11

I – 1 ND 280 position display unit 12
I – 2 Fundamentals of positioning 13
Datums 13
Actual position, nominal position and distance-to-go 14
Absolute workpiece positions 15
Incremental workpiece positions 15
Incremental position encoders 16
Absolute position encoders 16
Reference marks 17
I – 3 Basic functions of the ND 280 18
ND 280 power-up 18
Reference mark evaluation 19
Working without reference mark evaluation 19
ND 280 shutdown 19
Standard screen layout 20
Soft-key functions on the standard screen 21
Data input 22
Integrated help system 23
Data input forms 24
Instruction box messages 24
Error messages 24
I – 4 Job Setup 25
Operating modes 25
Datum setting 26
Setting the display value for one axis 26
Calling the JOB SETUP menu 27
Unit of measure 28
Scaling factor 29
Value for datum point 30
Stopwatch 30
Console adjustment 31
Language 31
I – 5 Error messages 32
Overview 32

II Installation, specifications 33

II – 1 Installation and electrical connection 34
Items supplied 34
Optional accessories 34
Mounting 35
Environmental conditions 35
Mounting location 35
ND 280 – Mounting and installation 35
Electromagnetic compatibility/
CE compliance 36
Electrical connection 37
Electrical requirements 37
Wiring the power connector 37
Grounding 37
Preventative maintenance or repair 38
Connecting the encoders 38
D-sub connection X1 (15-pin, female) for the following input signals 38
II – 2 Installation Setup 40
INSTALLATION SETUP menu 40
Setting up the encoder 41
Incremental linear encoder 42
Incremental rotary encoder 43
Absolute encoder 44
Using an absolute multiturn rotary encoder as a linear encoder 44
Configuring the display 45
Linear encoder 45
Rotary encoder 45
Counter settings 46
Error compensation 47
Linear error compensation (not for rotary encoders) 48
Non-linear error compensation 49
Setting up the serial port 53
Setting up the data interface 53
Diagnostics 55
Keypad test 55
Display test 55
Encoder test 56
Power supply 58

II – 3 Encoder parameters 59
Table values 59
HEIDENHAIN linear encoders 59
HEIDENHAIN rotary encoders 60
II – 4 Data interface 61
Data communication 61
Serial data transfer with the Import or Export function 62
Data transfer from the ND 280 to a printer 62
Data transfer from the ND 280 to a PC 62
Importing data into the ND 280 from a PC 63
Data format 63
Control characters 63
Software update (firmware update) installation 64
Wiring the connecting cable 65
USB Type B (UART), socket as per IEC 61076-3-108 66
External operation via RS-232-C/V.24 or USB interface 67
Key commands 67
Description of key commands 68
Key is pressed (TXXXX commands) 69
Output of screen contents (AXXXX commands) 69
Execute function (FXXXX commands) 73
Execute special function (SXXXX commands) 73
II – 5 Measured value output 74
Alternatives for starting measured value output 74
Measured-value output via the serial data interface X31 or X32 74
Propagation times 75
Duration of measured value transfer 76
Example: Data sequence during measured-value output 76

II – 6 Input and output of parameter list and error compensation table 77
Text file 77
Output format of the parameter list 78
First line 78
Second line 78
Subsequent lines for the individual parameters 78
Last line 78
Example of a parameter list 79
ND 280 with rotary encoder connected to input X1 79
Output format of the error compensation table 81
First line 81
Second line 81
Third line 81
Fourth line 81
Fifth line 82
Sixth line 83
Subsequent lines for further compensation values 83
Last line 83
Examples of error compensation tables 84
ND 280 with linear encoder connected to input X1 84
II – 7 Specifications for 86
ND 280 86
II – 8 Dimensions 88
ND 280 88
II – 9 Accessories 89
ID numbers for accessories 89
Mounting base for installation in 19-inch electrical cabinet 90

Working with the ND 280 position display unit

I – 1 ND 280 position display unit

The ND 280 position display unit from HEIDENHAIN is designed for measuring devices, adjustment and testing equipment, automated tasks, as well as infeed and positioning tasks with **one axis** that can be moved manually.

A HEIDENHAIN linear/angular/rotary encoder or a length gauge with 11 µApp, 1 Vpp or EnDat (purely serial) interface can be connected to the ND 280.

The following functions are available on the ND 280:

- Multilingual user guidance: Language can be selected by the user
- REF reference-mark evaluation for distance-coded or single reference marks
- Length and angle display
- Distance-To-Go or Actual Value operating mode
- Two datums
- Scaling factor
- Stopwatch
- Reset or Preset function
- Linear or non-linear error compensation for **axis-error compensation**
- There are two serial ports for transmitting measured values, compensation values or configuration parameters to a PC or printer: The data can be transferred via the **RS 232-C/V.24** or the **USB Type B (UART)** interface. It is also possible to download software via the serial interface.
- **Diagnostic functions** for testing the encoder, the keyboard, the screen and the supply voltage
- The **integrated help system** provides information and assistance in any situation.

Fig. I.1 ND 280

I – 2 Fundamentals of positioning

Datums

The workpiece drawing identifies a certain point on the workpiece (usually a corner) as the **absolute datum** and perhaps one or more other points as relative datums.

The datum setting procedure establishes these points as the origin of the absolute or relative coordinate systems. The workpiece, which is aligned with the machine axes, is moved to a certain position relative to the length gauge and the display is set either to zero or to another appropriate value.

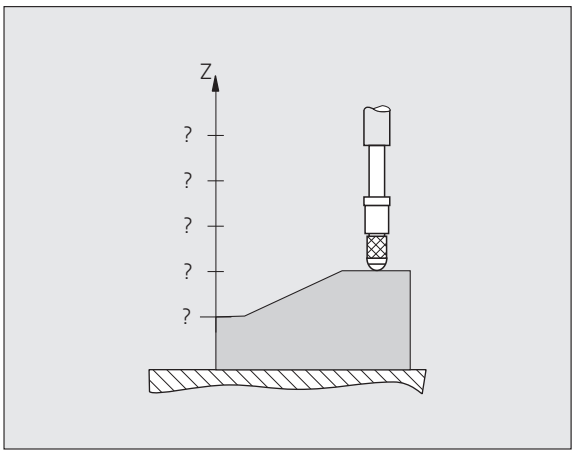

Fig. I.2 Length gauge without datum setting: Unknown assignment of measured values to positions

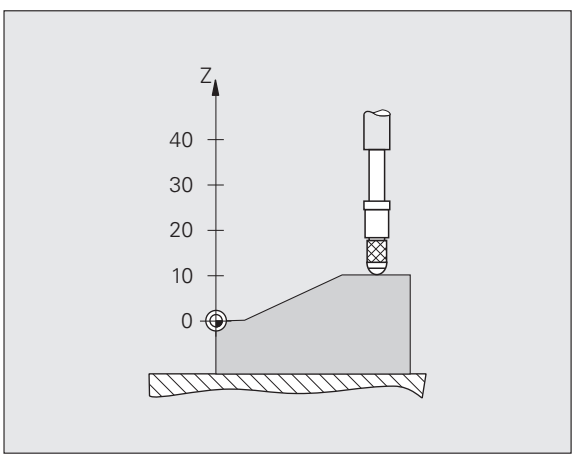

Fig. I.3 Length gauge with datum setting: Known assignment of measured values to positions

Actual position, nominal position and distance-to-go

The position of the length gauge at any given moment is called the **actual position**, while the position that the length gauge is to move to is called the **nominal position**. The distance from the nominal position to the actual position is called the **distance-to-go** (see Fig. I.4).

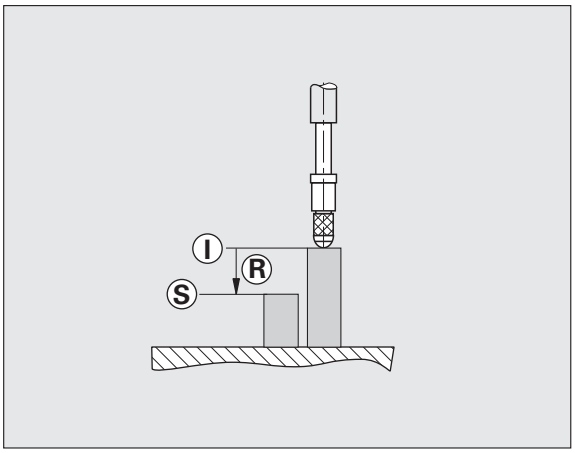

Fig. I.4 Nominal position **S**, actual position **I** and distance-to-go **R**

Absolute workpiece positions

Each position on the workpiece is uniquely identified by its absolute coordinates (see Fig. I.5).

Example: Absolute coordinates of position **1**: Z = 20 mm

If you are drilling or milling a workpiece according to a workpiece drawing with **absolute coordinates**, you are moving the tool or length gauge to the value of the coordinates.

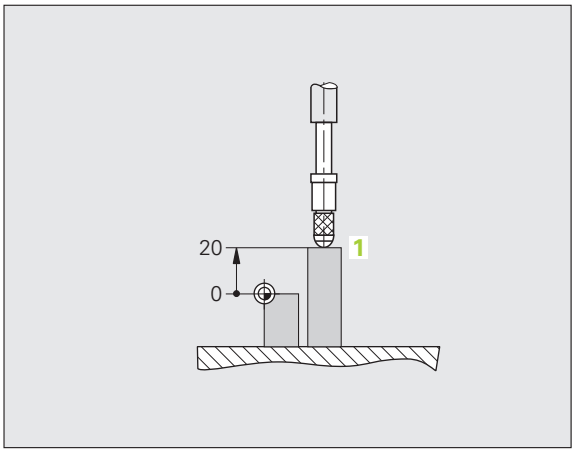

Fig. I.5 Position **1:** definition through absolute coordinates

Incremental workpiece positions

A position can also be referenced to the preceding nominal position. For this, the relative datum must be set to the preceding nominal position. Such coordinates are referred to as **incremental coordinates** (increment = increase). They are also called incremental or chain dimensions (since the positions are defined as a chain of dimensions). Incremental coordinates are identified by a preceding **I**.

Example: Incremental coordinate of position **3** referenced to position **2** see Fig. I.6.

Absolute coordinate of position **2**: Z = 10 mm

Incremental coordinates of position **3**: **I**Z = 10 mm

If you are drilling or milling a workpiece according to a workpiece drawing with **incremental coordinates**, you are moving the tool or length gauge **by** the value of the coordinates.

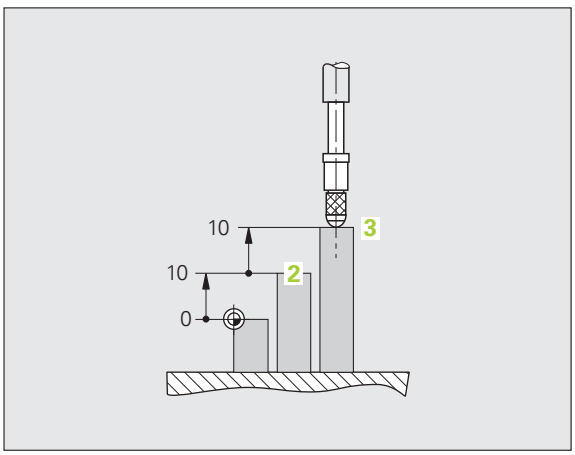

Fig. I.6 Position **3:** definition through incremental coordinates

Incremental position encoders

Incremental linear and rotary encoders from HEIDENHAIN convert the movements of, for example, a length gauge into electrical signals. A position display unit, such as the ND 280, constantly evaluates these signals and calculates the actual positions of the length gauge, which it displays as a numerical value on the screen.

If there is a power interruption, the calculated position will no longer correspond to the actual position of the length gauge. When power is restored, you can re-establish this relationship with the aid of the reference marks on the position encoders and the ND 280's reference mark evaluation feature.

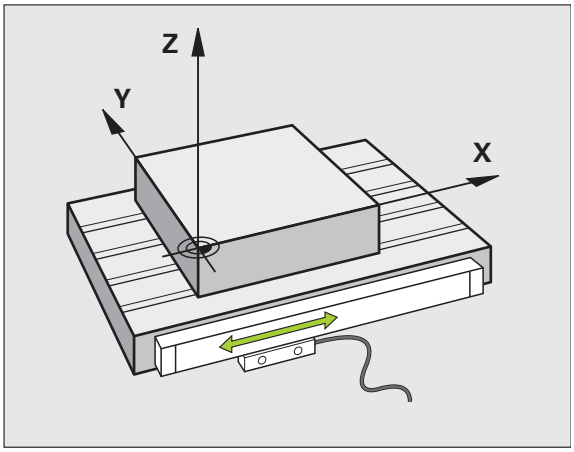

Fig. I.7 Linear position encoder, here for the X axis

Absolute position encoders

Absolute linear and angle encoders from HEIDENHAIN transmit the absolute position value to the position display unit immediately after switch-on. This way the assignment of the actual position to the position of, for example, a length gauge is re-established directly after switch-on.

The encoder reads the absolute position information directly from the scale graduation (see Fig. I.8), and transmits it serially to the position display unit via the bidirectional EnDat interface.

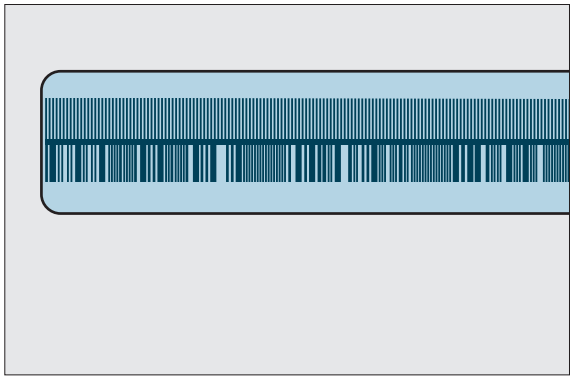

Fig. I.8 Scale grating for absolute position encoders

Reference marks

Encoders normally contain one or more reference marks (see Fig. I.9) which the ND 280's reference mark evaluation feature uses to re-establish datum positions after a power interruption. There are two main options available for reference marks: fixed and distance-coded.

Encoders with **distance-coded reference marks** have marks separated by a specific encryption pattern that allows the ND 280 to use any two pair of marks along the length of the encoder to re-establish the prior datums. This configuration means that the operator only has to travel a very short distance, anywhere along the encoder, to re-establish the datums when the ND 280 is turned back on.

Encoders with **fixed reference marks** have one or more marks on fixed intervals. To re-establish the datums correctly, it is necessary to use the same exact reference mark, during the reference mark evaluation routine, that was used when the datum was first established.

Danger to workpiece!

The established datums cannot be restored from one power cycle to the next if the reference marks were not crossed before the datums were set.

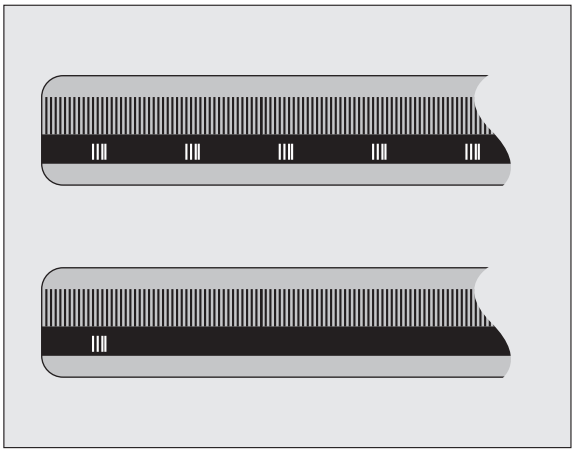

Fig. I.9 Linear scales – with distance-coded reference marks (upper illustration) and one reference mark (lower illustration)

I – 3 Basic functions of the ND 280

ND 280 power-up

Switch on the ND 280. The power switch is located on the back of the ND. After switching the ND 280 on, or after a power failure, the power-up screen will appear (see Fig. I.10). The green LED on the front panel lights up. The power-up screen shows the position display unit model as well as the ID and version number of the currently installed software.

Press the LANGUAGE soft key if you want to change the conversational language (see Fig. I.11). Press ENTER to confirm your selection.

Press the HELP soft key to call the integrated help system.

Press any key to call the standard screen.

Your ND 280 is now ready for operation in the Actual Value operating mode. If an incremental encoder is connected to the ND, the REF symbol is flashing. At this point the reference mark evaluation should be completed (see "Reference mark evaluation" on page 19).

If an absolute encoder is connected to the ND, the encoder automatically transmits the absolute position value to the position display unit.

- If necessary, you can change the language later, see "Language" on page 31.
- To update your software version (firmware version), see "Software update (firmware update) installation" on page 64.
- The idle time after which the ND activates the screen saver can be defined (factory default setting: 120 min, see "Console adjustment" on page 31). The red LED on the front panel lights up. To reactivate the screen, press any key or move the encoder.
- You can deactivate the power-up screen in order to display the standard screen immediately after power up (see "Counter settings" on page 46).

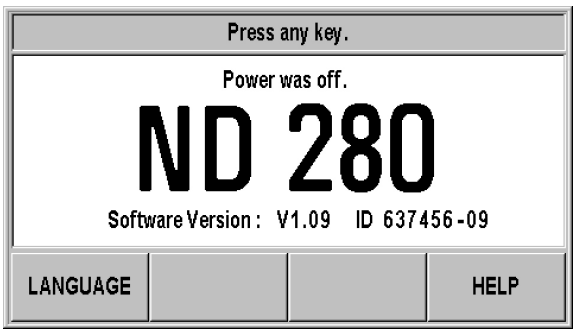

Fig. I.10 Power-up screen

Fig. I.11 Selecting the language

Reference mark evaluation

The ND 280's **REF** reference mark evaluation feature automatically re-establishes the relationship between axis-slide or length gauge positions and display values that you last defined by setting the datum.

Reference mark evaluation if an incremental encoder is connected (see Fig. I.12):

- If the REF symbol is flashing, cross over the reference marks.
- The REF mark evaluation feature determines the correct display value and the REF symbol stops flashing.

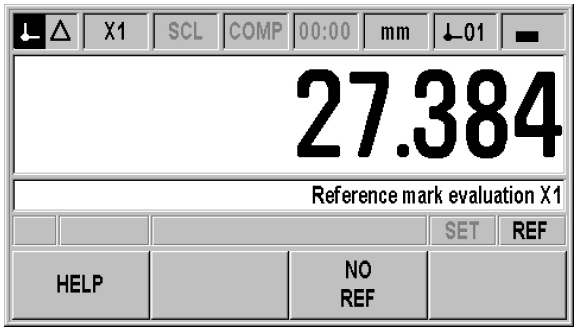

Fig. I.12 Screen for establishing reference marks

Working without reference mark evaluation

- Press the NO REF soft key to exit the reference mark evaluation routine and continue.
- Switch the ND 280 off and then on again to activate reference mark evaluation at a later time.

Danger to workpiece!

If an encoder is set up without reference marks, or if the reference marks have **not** been crossed over, then the REF indicator will appear dimmed, and datums set from any axis will be lost once power is turned off. This means that it is not possible to re-establish the relationship between axis slide positions and display values after a power interruption (switch-off).

ND 280 shutdown

Switch off the ND 280. The parameter settings and error compensation tables will be retained on a power cycle.

Standard screen layout

In addition to displaying position information, the ND 280 standard screen also displays information on settings and operating modes at any time (see Fig. I.13). The standard screen is divided into the following areas:

1 Status bar

- Current operating mode: Actual Value, Distance-To-Go.
- X1: Current display mode of axis.
- SCL shown in black: Scale factor is active.
- COMP shown in black: Error compensation is active for the displayed axis.
- Elapsed time of running **stopwatch:** If the stopwatch is stopped, the box appears dimmed.
- MM, INCH, DEG, DMS or RAD: Currently active unit of measure.
- Currently active datum: The ND 280 allows you to work with two different datums.
- Indicates the soft-key page (soft-key row) you are currently on.

2 Position display

- Length display:
  Current axis value with algebraic sign.
- Angle display:
  Current angle value with algebraic sign and unit of measure for display values in degrees, minutes or seconds.

3 Message line

- The message line provides information on the required data input or procedures, which is intended to support you in using the position display unit.
- If errors or warnings occur, they show up in flashing letters in the message line. Acknowledge the message with the C key.
- If a multiturn rotary encoder is connected, the ND shows the number of revolutions at the right edge of the message line.

4 Status display

- Set: If you enter a new value during datum setting, the SET symbol will start flashing.
- REF: The REF symbol is flashing in black until the reference mark evaluation for the displayed axis has been completed (if an incremental encoder is connected).

5 Soft keys

The NAVIGATION key (shown at left) allows you to move through the two pages of selectable soft-key functions. Press the corresponding soft key directly below each soft key label to execute the soft-key function. The soft-key assignment varies depending on the ND's operating mode.

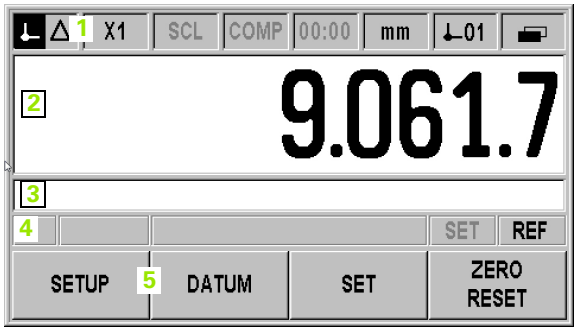

Fig. I.13 Standard screen

Soft-key functions on the standard screen

There are two pages (rows) of soft-key functions. Use the NAVIGATION key (shown at left) to move through the pages. The page indicator in the status bar shows the number of pages. The darkened page indicates the page you are currently on. This manual provides more information about each soft key on the pages indicated in the table below.

Fig. I.14 Page indicator

Soft key page 1:

Soft key	Function	Page
SETUP	Opens the JOB SETUP menu and provides access to the INSTALLATION SETUP soft key.	Page 25
DATUM	Switches the datum (see datum display in the status bar).	Page 26, Page 30,
PRESET	Sets the axis value to the preset value for the datum.	Page 26
RESET	■ Actual Value mode: Resets the selected datum of the displayed axis to zero. ■ Distance-To-Go mode: Resets the distance-to-go for the displayed axis to zero.	Page 26

Soft key page 2:

Soft key	Function	Page
HELP	Calls the integrated help system.	Page 23
PRINT	Transmits the current measured value to a connected PC or printer via the serial interface.	Page 74
Distance-to-go on	Switches the display between operating modes Actual Value/ Distance-To-Go.	Page 25
MM inch DEG DMS rad	Switches the position display (length or angle) to the displayed unit of measure. The selected unit of measure is shown in the status bar.	Page 28

Data input

- Use the keypad to enter numeric values within each field.
- The ENTER key will confirm the entry within a field and return to the previous screen.
- Press the C key to clear entries, acknowledge error messages or return to the previous screen.
- **Soft-key labels** 1 show the various operating and parameter-setting functions. These functions are selected by pressing the corresponding soft key directly below each soft key label. The soft-key functions are usually arranged in up to three soft-key pages. Use the NAVIGATION key 2 to move through the soft-key pages (see below).
- The NAVIGATION key 2 moves through the pages of available soft-key functions. The current page will be highlighted in the status bar at the top of the screen.
- Use the UP or DOWN arrow key 3 to move between fields within a form or menu items (parameters) of a menu. The orientation of the cursor is such that it will return to the top once it has reached the bottom of the menu.

Fig. I.15 Data input

Integrated help system

The integrated help system provides appropriate information and assistance in any situation (see Fig. I.16).

To **call** the integrated help system:

- Press the HELP soft key.
- Information relevant to the current operation will be displayed.
- Use the UP or DOWN arrow keys or the PAGE UP or DOWN soft keys if the explanation is spread over more than one screen page.

To view information on another topic:

- Press the LIST OF TOPICS soft key to view the index of the help topics.
- Press the PART 1/[PART 2] soft key to call the extended help, which is available in exceptional cases.
- Press the UP or DOWN arrow key or the PAGE UP or PAGE DOWN soft key to scroll through the index.
- Press the VIEW TOPIC soft key or the ENTER key to select the item you need.

To leave the **integrated help system**:

- Press the C key. The ND will return to the screen from which you called the help system.

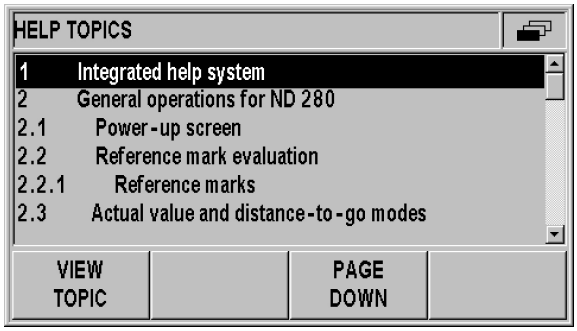

Fig. I.16 Integrated help system

Data input forms

Information required for various operational functions and setup parameters is entered through a data input form. These forms will appear after selecting features that require any additional information. Each form provides specific fields for entering the required information.

To confirm the changes:

▶ Press the ENTER key.

To ignore the changes and return to the previous screen:

▶ Press the C key.

Instruction box messages

Whenever a menu or form is open, an instruction box will also open immediately to the right of it (see Fig. I.17). This message box will provide information to the operator on what the chosen function does and present instructions on the available options.

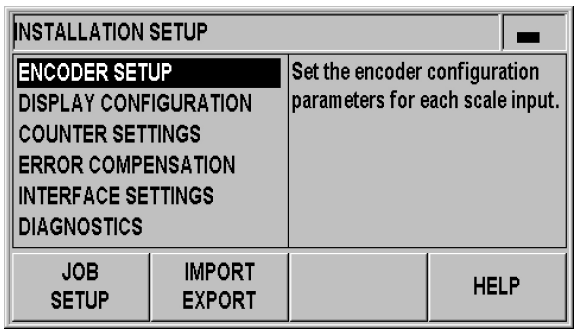

Fig. I.17 Example of instruction box messages

Error messages

If an error occurs while you are working with the ND, the message will appear on the display and provide an explanation of what caused the error.

To **acknowledge** the error message:

▶ Press the C key.

If a new error occurs before the last error has been acknowledged, the last error that has occurred will be displayed. After the last error has been acknowledged, the previous error will be displayed again. The ND always stores the last error of each error category for acknowledgment (see "Error messages" on page 32).

I – 4 Job Setup

Operating modes

The ND 280 has two operating modes: **Actual Value** and **Distance-To-Go.**

Status bar	Function
	Shows current actual position
	Displays current distance from the nominal position

Fig. I.18 Actual Value symbol (highlighted) in the status display

In the **Actual Value** operating mode, the ND 280 always displays the current actual position of the length gauge, relative to the active datum. In this mode, all moves are done by traveling until the display matches the nominal position that is required.

The **Distance-To-Go** feature enables you to approach nominal positions simply by traversing to display value zero. Proceed as follows:

- Press the DELTA MODE ON soft key to switch the operating mode (see "Soft-key functions on the standard screen" on page 21): The display value is zero.
- Use the numeric keys to enter the nominal position you want to move to and confirm with the ENTER key: The distance-to-go is displayed.
- Traverse the axis until the display value is zero.
- If required, enter the next nominal position and confirm with the ENTER key: Traverse the axis until the display value is zero.
- To leave the Distance-To-Go operating mode: Press the DELTA MODE OFF soft key.

Algebraic sign of distance-to-go:

- The distance-to-go has a positive sign if the axis direction from the actual towards the nominal position is negative.
- The distance-to-go has a negative sign if the axis direction from the actual towards the nominal position is positive.

Datum setting

The datum setting procedure assigns the matching display value to a known position. With the ND 280 position display unit, you can set two separate datum points.

During operation, you can reset the display value of the axis to zero, or preset it to a defined or new value.

With RESET, you set the current datum to zero at the current position for that axis:

- If the **Actual Value mode** is active, the display value is zero.
- If the **Distance-To-Go mode** is active, the distance remaining to the position of the new datum is displayed.

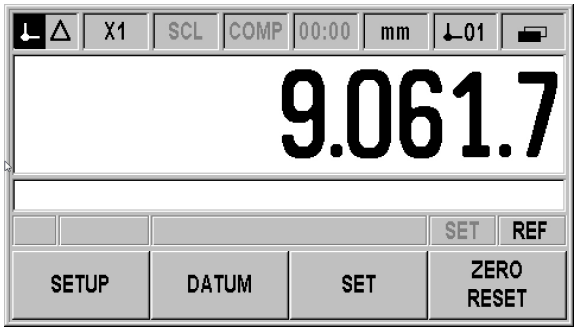

Fig. I.19 Standard screen with soft-key page 1

Setting the display value for one axis

- Select soft-key page 1 on the standard screen.
- If necessary, press the DATUM soft key to select the datum you want to set.
- To reset the display value to zero, press the RESET. As an alternative, you can use the numeric keys to enter the number **zero** and press ENTER to confirm your entry.
- You can also set any desired display value by entering the new value with the **numeric keypad.** As a result, the SET symbol in the status display starts flashing in . Press the ENTER key to confirm the entered numerical value.
- To set the display value to the preset value for the datum point (see "Value for datum point" on page 30), press the PRESET soft key.

Calling the JOB SETUP menu

The ND 280 offers two categories for setting up operating parameters: JOB SETUP and INSTALLATION SETUP.

- The JOB SETUP parameters are used to accommodate specific machining requirements for each job.
- The INSTALLATION SETUP menu is used to establish encoder, display and communication parameters (see "INSTALLATION SETUP menu" on page 40).

To call the JOB SETUP menu:

▶ Press the SETUP soft key to open the JOB SETUP menu.

When in the JOB SETUP menu, the following soft keys will be available (see Fig. I.20):

- INSTALLATION SETUP
  Press to begin accessing the INSTALLATION SETUP parameters (see "INSTALLATION SETUP menu" on page 40).
- IMPORT/EXPORT
  Operating parameter information can be imported or exported over the serial port. (See "Serial data transfer with the Import or Export function" on page 62). Press this soft key to call the two following soft keys:

▶ Press IMPORT to download operating parameters from a PC.

▶ Press EXPORT to upload the current operating parameters to a PC.

▶ To exit, press the C key.

- HELP
  This soft key will open on-line help.

Press the NAVIGATION key to move through the pages of menu parameters. To view and change menu parameters, use the UP/DOWN arrow key to highlight the parameter of interest and press the ENTER key.

On the following pages you will find more information on the menu parameters.

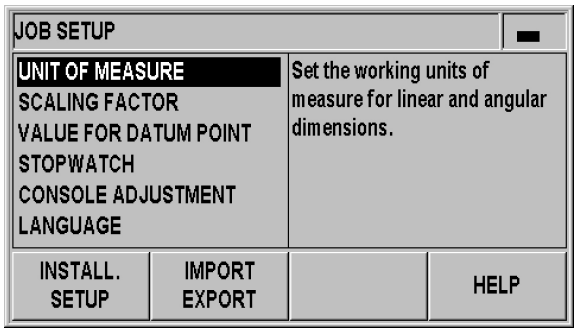

Fig. I.20 JOB SETUP menu

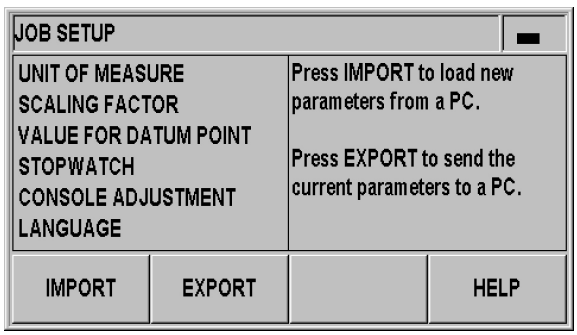

Fig. I.21 JOB SETUP menu

Unit of measure

The UNITS OF MEASURE form is used to specify the preferred display units and formats for linear and angular measurements. The ND 280 powers up with these settings in effect.

In the LINEAR field, define the unit of measure for linear measurement:

- In the JOB SETUP menu, select UNITS and press the ENTER key to open the form.
- Use the MM/INCH soft key to switch between MM and INCHES. This can be performed in either Actual Value or Distance-To-Go mode.

In the ANGULAR field, define the format and input mode for angles.

- Press the ANGLE soft key to switch between DECIMAL DEGREES, RADIANS and DMS (degrees/minutes/seconds).

The defined unit of measure is shown in the status bar on the standard screen.

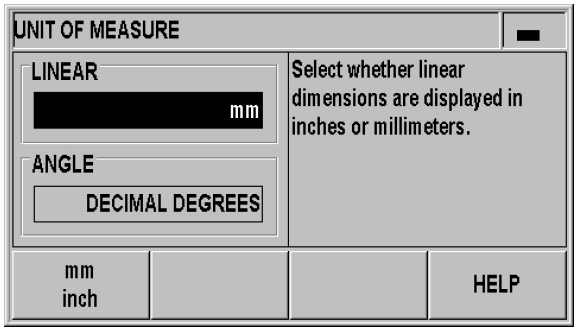

Fig. I.22 Unit of measure

Scaling factor

The scaling factor is used to scale the part up or down. All encoder movements are multiplied by the scaling factor.

- A scaling factor of 1.0 creates a part with the exact size as dimensioned on the print.
- A scaling factor > 1 enlarges the workpiece.
- A scaling factor < 1 reduces the workpiece.

To define the scaling factor:

- In the JOB SETUP menu, select SCALE FACTOR and press the ENTER key to open the form.
- The ON/OFF soft key is used to disable the current scaling factors.
- Use the numeric keys to enter a number greater than zero if a scaling factor is active. The number range is 0.100000 to 10.000000. When the scaling factor is a value other than 1, the scaling symbol SCL is shown in black in the status bar.

The settings for the scaling factor will be retained on a power cycle.

- **Mirror**: A scaling factor of **–1.00** will produce a mirror image of the part. You can both mirror and scale a part at the same time.

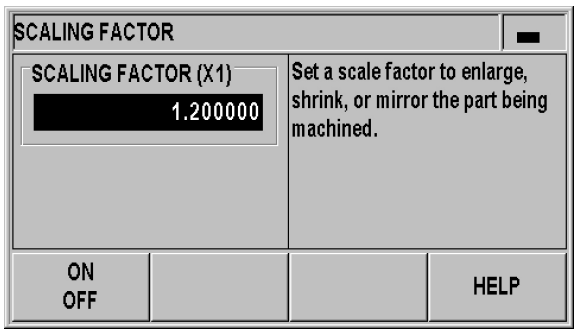

Fig. I.23 Scaling factor

Value for datum point

This form is used to set a value for a datum point (see Fig. I.24).

- In the JOB SETUP menu, select VALUE FOR DATUM POINT and press the ENTER key to open the form.
- Enter the value and press ENTER to confirm your entry.
- If you want to set the display value to this value, press the PRESET soft key on the standard screen (see "Datum setting" on page 26) .

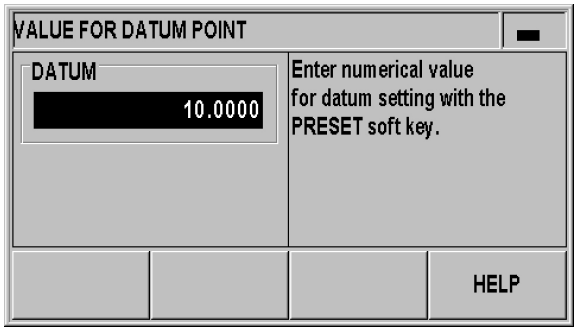

Fig. I.24 Value for datum point

Stopwatch

The stopwatch shows the hours (h), minutes (m), seconds (s). It operates like a stop watch showing elapsed time. The clock starts timing from 0:00:00.

The ELAPSED TIME field shows the total accumulated time from each interval (see Fig. I.25).

- In the JOB SETUP menu, select STOPWATCH and press the ENTER key to open the form.
- Press the START/STOP soft key. The ND 280 shows the status field RUNNING and the elapsed time. Press it again to stop time from elapsing.
- Press the RESET soft key to reset the elapsed time. Resetting will stop the clock if it is running (STOPPED).

Fig. I.25 Stopwatch

- All stopwatch functions (START, STOP, and RESET) are applied immediately.
- The **status bar** shows minutes and seconds for an elapsed time of less than 1 hour. Hours and minutes are shown for a time of 1 hour or more.

Console adjustment

You can adjust the brightness of the ND 280's LCD display (see Fig. I.26):

- In the JOB SETUP menu, select CONSOLE ADJUSTMENT and press the ENTER key to open the form.
- Press the DECREASE or INCREASE soft key to adjust the brightness to your requirements.
- The DISPLAY SAVER setting is the amount of time the system is idle before the LCD is turned off. The idle time may be set from 30 to 120 minutes. The display saver can be disabled during the current power cycle by pressing the DISABLE soft key.

You can also use the UP or DOWN arrow key to adjust the LCD's brightness directly on the screen.

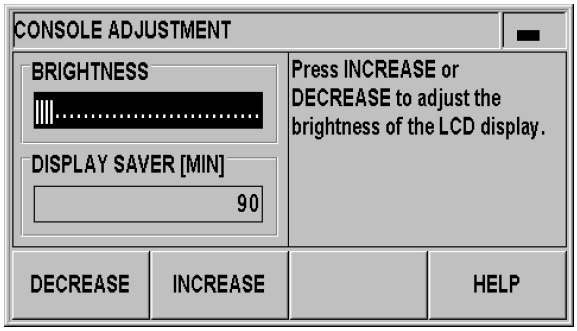

Fig. I.26 Console adjustment

Language

The ND 280 supports multiple languages. To change the language:

- In the JOB SETUP menu, select LANGUAGE and press the ENTER key to open the form.
- Press the LANGUAGE soft key until the desired language appears in the LANGUAGE field.
- Press ENTER to confirm your selection.

Fig. I.27 Language

I – 5 Error messages

Overview

Various error messages may occur while you're using the ND 280. The ND 280 always stores the last error of each error category. You can acknowledge the error messages by pressing the C **key**,

> If a new error occurs before the last error has been acknowledged, the last error that has occurred will be displayed. After you have acknowledged the last error, the previous error will be displayed again. The ND always stores the last error of each error category for acknowledgment.

The following overview will help you to diagnose the errors as quickly as possible:

Error message	Error cause and corrective action
Error: Reference mark spacing	The reference mark spacing defined in ENCODER SETUP in the INSTALLATION SETUP menu does not match the actual spacing of the reference marks.
DSR signal missing	The connected encoder has not sent a DSR signal.
EnDat connection problem	The ND has detected a communication problem with the encoder (only EnDat). Restart the encoder by unplugging and replugging the encoder cable, or switch the position display unit off and then back on.
Error X1: Input frequency too high	The input frequency at encoder input X1 is too high (e. g., when the traversing speed is too high). Use the diagnostic functions of the ND 280 to check the encoder.
Error: Display overflow	The measured value to be displayed is too large or too small. Set a new datum or move within display range.
Position error X1	Various reasons may cause the encoder (only EnDat) to set an error bit for axis X1. Restart the encoder by unplugging and replugging the encoder cable, or switch the ND off and then back on. If the error recurs, use the ND's diagnostic functions for a more detailed diagnosis of the error.
ERROR X1: Encoder signal too small	The encoder signal at input X1 is too small (e. g, when the encoder is contaminated). Use the diagnostic functions of the ND 280 to check the encoder.
Error X1: Encoder signal too large	The encoder signal at input X1 is too large (e. g, when the encoder is mounted incorrectly). Use the diagnostic functions of the ND 280 to check the encoder.
Interface commands too fast	Two commands for measured value output are sent in too close a succession.

II

Installation, specifications

II – 1 Installation and electrical connection

Items supplied

- ND 280 position display unit with the following connections:
  - **An encoder module** for connecting a HEIDENHAIN encoder with **11 µApp**, **1 Vpp** or **EnDat (purely serial) interface for axis X1** is a standard item supplied with the position display unit.
  - **Two serial connections** for data transmission: **RS-232-C/V.24** (**X31**) and **USB type B** (UART, **X32**)
- 2.5 m long power cable with European plug
- Quick Reference Guide

Optional accessories

- Mounting base for installation in a 19-inch electrical cabinet
- Various adapter cables with D-sub connector for HEIDENHAIN encoders
- Length gauge with D-sub connector
- Data transmission cable for RS-232-C/V.24 interface
- Data transmission cable for USB interface

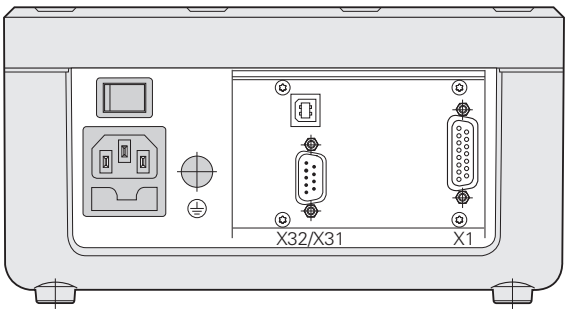

Fig. II.1 Connections

Mounting

Environmental conditions

Property	Value
Protection (IEC 60529)	IP 40 rear panel IP 54 front panel
Operating temperature	0 °C to 50 °C (32 °F to 122 °F)
Storage temperature	–40 °C to 85 °C (–40 °F to 185 °F)
Relative air humidity	Annual mean: < 75 % In exceptional cases: < 90 %
Weight	Approx. 2.5 kg (5.5 lb.)

Mounting location

Locate the ND 280 in a well ventilated area such that it may be easily accessed during normal operation.

ND 280 – Mounting and installation

M4 screws are used to secure the ND 280 from below. For the hole locations, see "Dimensions" on Page 88.

You can install the ND 280 in an electrical cabinet (see "Mounting base for installation in 19-inch electrical cabinet" on page 90) by using a mounting base (option). The dimensions of the position display unit allow you to install two units next to each other in a 19-inch cabinet (see "Dimensions" on page 88).

The ND 280 position display units are easily **stackable**. **Slots on the top** prevent the stacked units from being moved out of place.

The units can be stacked in either of the following two ways (see Fig. II.2):

- On top of each other at a front angle of 10°.
- Vertically on top of each other: Screw the front feet of the ND into the appropriate mounting holes.

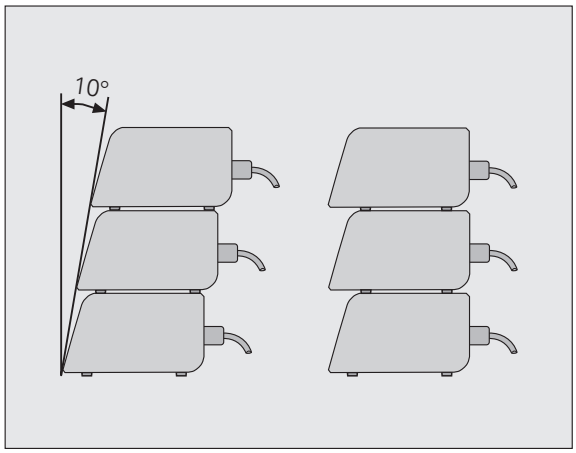

Fig. II.2 Alternatives for stacking the position display units

Electromagnetic compatibility/ CE compliance

The ND 280 fulfills the requirements for electromagnetic compatibility according to 2004/108/EC with respect to the generic standards for

- Noise immunity as per IEC 61000-6-2: Specifically:
  - ESD as per IEC 61000-4-2
  - Electromagnetic fields as per IEC 61000-4-3
  - Burst as per IEC 61000-4-4
  - Surge as per IEC 61000-4-5
  - Conducted disturbances as per IEC 61000-4-6
- Emission as per IEC 61000-6-4: Specifically:
  - For industrial, scientific and medical (ISM) equipment as per EN 55011
  - For information technology equipment as per IEC 55022 Class B

Electrical connection

Electrical requirements

Danger of electrical shock!

Disengage the power plug before opening the unit!

Connect a protective ground (see "Grounding" on page 37).

The protective ground connection must never be interrupted.

Danger to internal components!

Do not engage or disengage any connecting elements while the unit is under power!

Use only original replacement fuses.

Type	Value
AC voltage	Between 100 and 240 V~
Power	Max. 30 W
Frequency	50/60 Hz
Fuse	2 x T500 mA

Wiring the power connector

The ND features a plug socket for a cable with European plug on the rear panel, see Fig. II.3:

Hot leads: L and N

Ground: ⏚

Minimum diameter of power connection cable: 0.75 mm^2

Maximum cable length: 3 m

Grounding

Danger to internal components!

It is necessary to connect the ground terminal on the rear panel to the star point of machine ground.

Minimum cross-section of the connecting wire: 6 mm^2, see Fig. II.4.

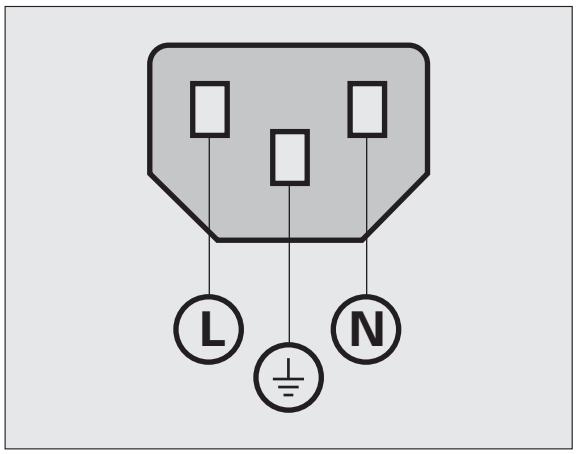

Fig. II.3 Wiring the power connector

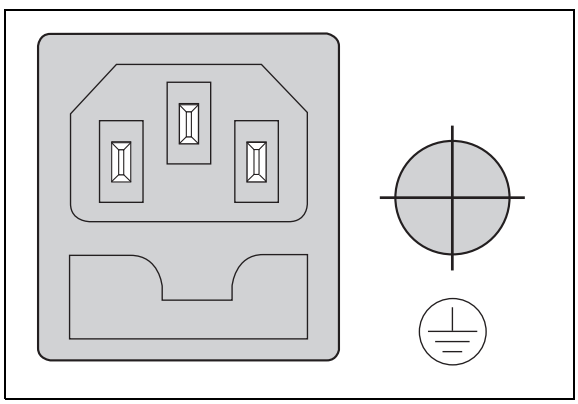

Fig. II.4 Power connection and protective ground terminal on the rear panel

Preventative maintenance or repair

No special preventative maintenance is necessary. For cleaning, wipe lightly with a dry lint-free cloth.

Danger of electrical shock!

- The position display unit must be repaired by qualified and authorized service technicians.
- See the last page of the Operating Instructions for our service department's contact data.

Connecting the encoders

The ND 280 operates with the following encoders:

- Incremental encoders with sinusoidal output signals (11 µApp or 1 Vpp interface)
- Absolute encoders with a bidirectional EnDat interface (purely serial; when an EnDat 2.1 interface is used, the resolution is limited, because the incremental signals are ignored.)

The encoder input on the rear panel is designated X1.

Danger of electrical shock!

The interface X1 complies with the requirements of EN 50 178 for **low voltage electrical separation**.

Do not engage or disengage any connecting elements while the unit is under power!

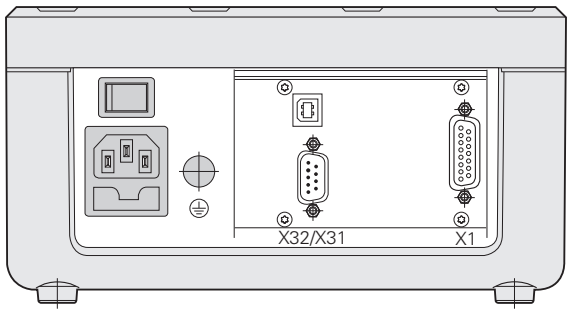

Fig. II.5 Connections

D-sub connection X1 (15-pin, female) for the following input signals

Input signal	Maximum cable length	Maximum input frequency
11 µApp	30 m	100 kHz
1 Vpp	60 m	500 kHz
EnDat	100 m	-

Pin assignment X1

D-sub connector 15-pin	Input signal 11 µApp	Input signal 1 Vpp	EnDat (purely serial)
1	I1+	A+	
2	0 V (UN)	0 V (UN)	0 V (UN)
3	I2+	B+	
4	5 V (Up)	5 V (Up)	5 V (Up)
5			Data
6	Internal shield		
7	I0–	R–	
8			Clock
9	I1–	A–	
10		0 V sensor	0 V sensor
11	I2–	B–	
12		5 V sensor	5 V sensor
13			Data (inverse)
14	I0+	R+	
15			Clock (inverse)
Housing	External shield	External shield	External shield

In the INSTALLATION SETUP menu, you define the parameters for the encoder (see "Setting up the encoder" on page 41).

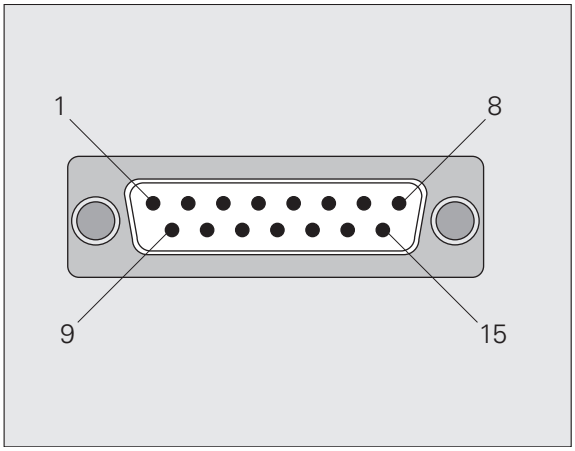

Fig. II.6 15-pin encoder connector X1 for the encoder input on the rear panel

II – 2 Installation Setup

INSTALLATION SETUP menu

The ND 280 offers two categories for setting up operating parameters: JOB SETUP and INSTALLATION SETUP.

- The JOB SETUP parameters are used to accommodate specific machining requirements for each job, see "Job Setup" on page 25.
- The INSTALLATION SETUP menu is used to establish encoder, display and communication parameters.

To call the INSTALLATION SETUP menu:

- Begin by pressing the SETUP soft key. This opens the JOB SETUP menu.
- Press the INSTALLATION SETUP soft key.
- Use the numeric keys to enter the correct passcode (**95148**) and then press ENTER.

INSTALLATION SETUP parameters are established during the initial installation and, most likely, will not often change. For this reason, the INSTALLATION SETUP parameters are protected by a **passcode**.

Once you enter the passcode, it will not have to be entered again until you cycle power.

When in the INSTALLATION SETUP menu, the following soft keys will be available (see Fig. II.7):

- JOB SETUP
  Press to begin accessing the JOB SETUP parameters (see "Job Setup" on page 25).
- IMPORT/EXPORT
  Press this soft key to call the IMPORT or EXPORT soft keys for transmitting the operating parameters (see "Serial data transfer with the Import or Export function" on page 62).
- HELP
  This soft key will open on-line help.

Press the NAVIGATION key to move through the pages of menu parameters. To view and change menu parameters, use the UP/DOWN arrow key to highlight the parameter of interest and press the ENTER key.

On the following pages you will find more information on the menu parameters.

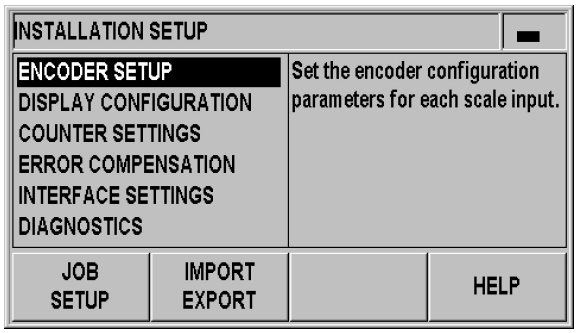

Fig. II.7 INSTALLATION SETUP menu

Setting up the encoder

In the ENCODER SETUP form you configure the ND 280 for the connected encoder:

- The cursor will default to the ENCODER SETUP field upon opening INSTALLATION SETUP. Press the ENTER key to confirm your selection.
- The cursor will be in the ENCODER TYPE field. Select the encoder type by pressing the TYPE soft key:
  - LINEAR: Linear encoder
  - ROTARY: Rotary encoder
- Press the ENTER key to confirm your selection.
- The ND automatically enters the measurement signal received in the ENCODER SIGNAL field: NO SIGNAL, 1 Vpp, 11 µApp ENDAT 2.1 or ENDAT 2.2.

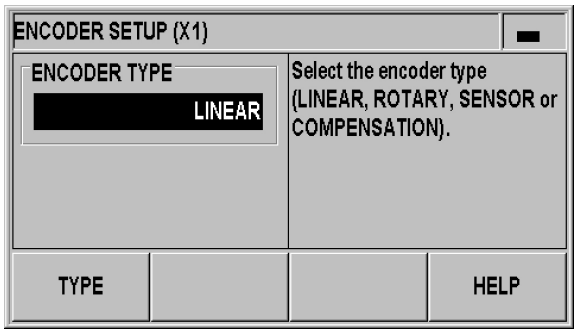

Fig. II.8 Encoder type

Incremental linear encoder

- For linear encoders, cursor to the SIGNAL PERIOD field and toggle the COARSER or FINER soft key to select a predefined encoder signal period, or type in the exact signal period (in µm) desired (see "Encoder parameters" on page 59).
- In the REFERENCE MARK field, toggle the REF MARK soft key to select whether the encoder has no reference signal (NONE), a single reference mark (SINGLE) or distance-coded reference marks (CODED/...). For **distance-coded** reference marks, select the spacing (500, 1000, 2000 or 5000 signal periods).
- The EXTERNAL REF field is inactive.
- In the COUNT DIRECTION field, select the count direction by pressing the POSITIVE/ NEGATIVE soft key. If the encoder's count direction matches the user's traverse direction, select POSITIVE. If the directions do not match, select NEGATIVE.
- In the ERROR MONITOR field, select whether the ND will monitor and display encoder counting and signal errors by pressing the ERROR soft key. In the ERROR MONITOR field, you can select OFF, FREQUENCY, CONTAMINATION or FRQ.+CONTAMINATION. When an error message occurs, press the C key to acknowledge it.

If you set the ERROR MONITOR field to OFF, the ND 280 will ignore encoder errors.

Counting errors are caused by contamination or excessive frequency:

- **Contamination**: The signal to the encoder falls below a set limit.
- **Frequency errors**: The signal frequency exceeds the set limit.

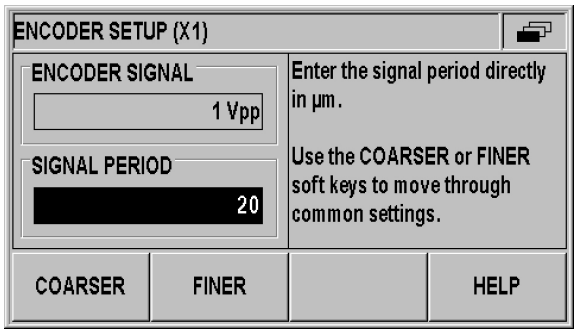

Fig. II.9 Incremental linear encoder form

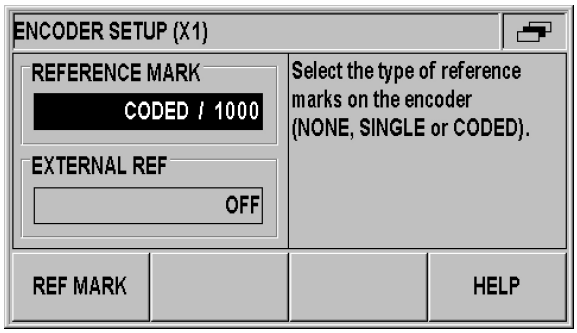

Fig. II.10 Incremental linear encoder form

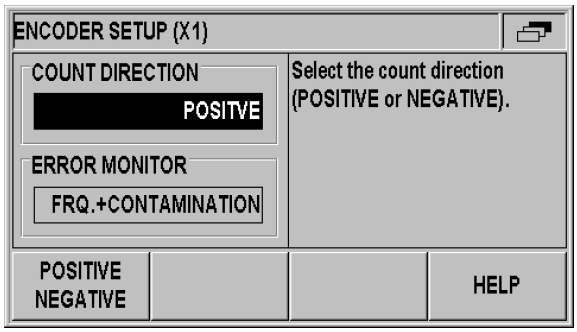

Fig. II.11 Incremental linear encoder form

Incremental rotary encoder

- For rotary encoders, enter the encoder's signal period per revolution (360°) directly in the SIGNAL PERIOD field (see "Encoder parameters" on page 59). Press the DOWN arrow key to move to the next parameter.
- In the REFERENCE MARK field, use the numeric keys to enter the number of reference marks (0 for NONE, 1 for SINGLE, ...) per revolution (360°).
- The EXTERNAL REF field is inactive.
- In the COUNT DIRECTION field, select the count direction by pressing the POSITIVE/ NEGATIVE soft key. If the encoder's count direction matches the user's traverse direction, select POSITIVE. If the directions do not match, select NEGATIVE.
- In the ERROR MONITOR field, select whether the ND will monitor and display encoder counting and signal errors by pressing the ERROR soft key. In the ERROR MONITOR field, you can select OFF, FREQUENCY, CONTAMINATION or FRQ.+CONTAMINATION. When an error message occurs, press the C key to acknowledge it.

If you set the ERROR MONITOR field to OFF, the ND 280 will ignore encoder errors.

Counting errors are caused by contamination or excessive frequency:

- **Contamination**: The signal to the encoder falls below a set limit.
- **Frequency errors**: The signal frequency exceeds the set limit.

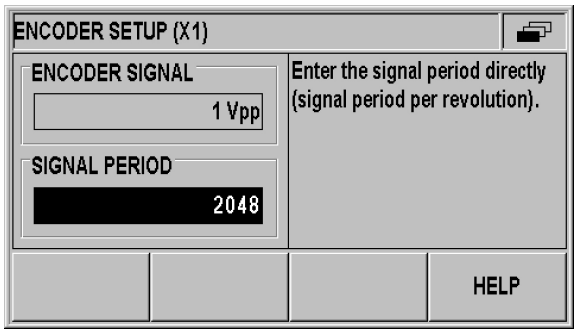

Fig. II.12 Incremental rotary encoder form

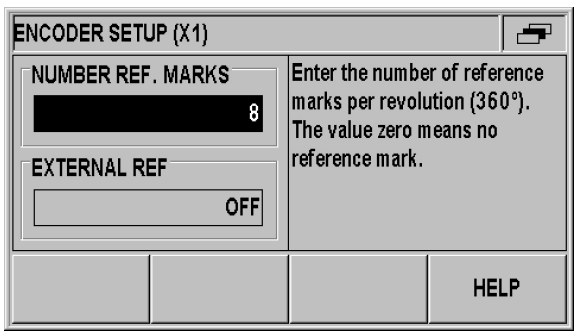

Fig. II.13 Incremental rotary encoder form

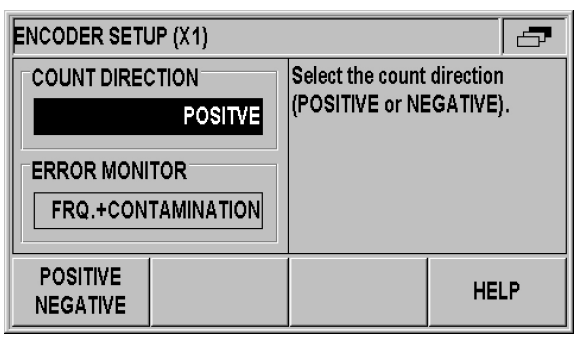

Fig. II.14 Incremental rotary encoder form

Absolute encoder

For **absolute** encoders with EnDat interface, you can only define the **COUNT DIRECTION** and the **ERROR MONITOR**.

All other fields in the ENCODER SETUP form show information that has been transferred from the encoder.

Press the ENDAT ENC. FILE soft key to display the encoder's electronic **ID label**. In this form, you can cancel an **existing datum shift** by pressing the CANCEL DATUM SHIFT soft key.

When an EnDat 2.1 interface is used, the resolution is limited, because the incremental signals are ignored.

Using an absolute multiturn rotary encoder as a linear encoder

- Select the multiturn rotary encoder input in the ENCODER SETUP form and press ENTER to confirm.
- Select LINEAR in the ENCODER TYPE field and press ENTER to confirm your selection.
- Enter the ball screw pitch in mm in the SCREW PITCH field and press ENTER to confirm your entry.
- The multiturn rotary encoder will now be handled as if it were an absolute linear encoder.

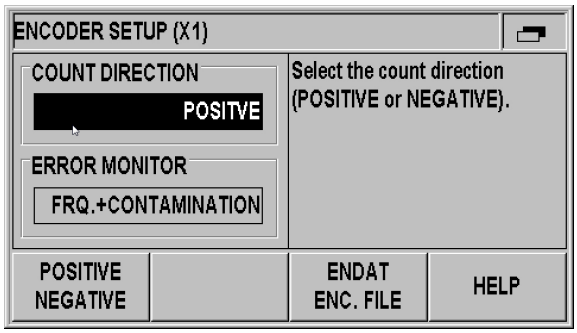

Fig. II.15 Absolute encoder form

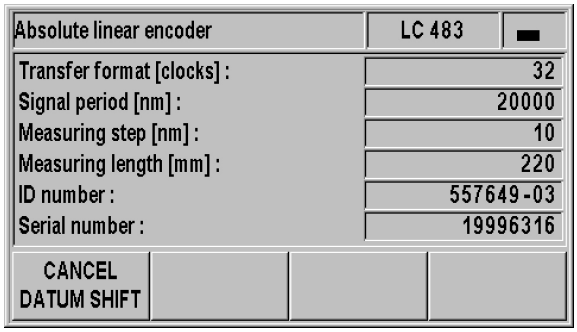

Fig. II.16 Example of electronic ID label

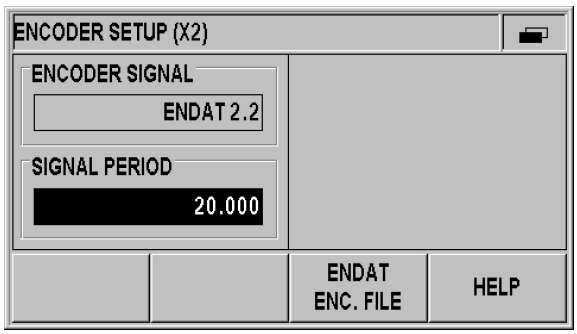

Fig. II.17 Screw pitch form

Configuring the display

In the DISPLAY CONFIGURATION form you determine the display resolution for the different encoders.

- In the INSTALLATION SETUP menu, select DISPLAY CONFIGURATION.

> The selectable display resolution depends on the signal period. The smallest selectable display resolution corresponds to the rounded-off value calculated from dividing the signal period by 4096. For linear encoders, resolutions from 0.5 mm to 0.001 µm are possible, and for rotary encoders from 0.5° to 0.000001° (00°00'00.1").

Linear encoder

- Press the COARSER or FINER soft key to select the display resolution for the axis display in the DISPL. RESOLUTION X1 field.

Rotary encoder

- Press the COARSER or FINER soft key to select the display resolution for the axis display in the DISPL. RESOLUTION X1 field.
- In the ANGLE DISPLAY field, press the ANGLE soft key to choose between the three following angle formats:
  - +/– 180 DEGREES
  - 360 DEGREES
  - +/– INFINITE

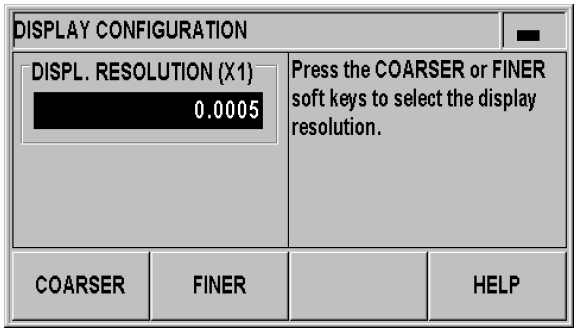

Fig. II.18 DISPLAY CONFIGURATION form for linear encoder

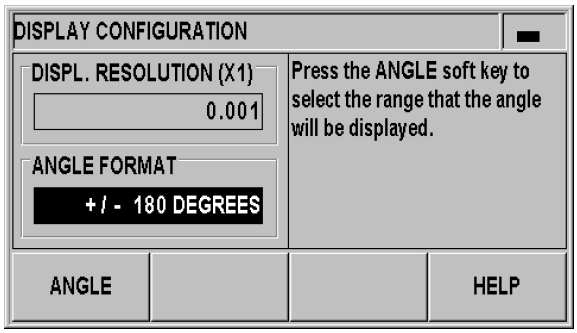

Fig. II.19 DISPLAY CONFIGURATION form for rotary encoder

Counter settings

In the COUNTER SETTINGS form, you define the user application for the position display unit (see Fig. II.20):

- In the INSTALLATION SETUP menu, select COUNTER SETTINGS.
- The APPLICATION field shows that you have configured the ND for one axis.
- In the KEYBOARD field, use the KEYPAD soft key to release/lock the keypad. To release the locked keypad, press and hold the NAVIGATION key for at least **three seconds.** Then enter the password (**246584**) for releasing the keypad and confirm your entry by pressing the ENTER key, or cancel by pressing the C key.
- Press the DOWN arrow key to move to the next parameter.
- Press the SECOND DEC. POINT soft key to display a second decimal point after 1/1000 inches (mm).
- Press the POWER UP SCREEN soft key to define whether the ND displays the initial screen after it has been switched on.
- Press the DOWN arrow key to move to the next parameter.
- The DISPLAY UNIT field shows the **type** of position display.
- The SOFTWARE VERSION field shows the **currently installed software version** and its **identification number**. To update your software version, see "Software update (firmware update) installation" on page 64.
- The FACTORY DEFAULTS soft key resets the configuration parameters to factory defaults. Press the ENTER key to confirm, or press the C key to cancel.

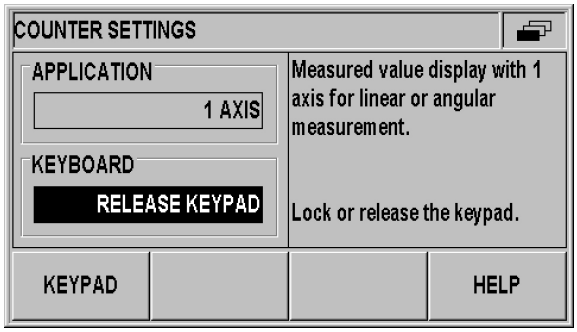

Fig. II.20 COUNTER SETTINGS form

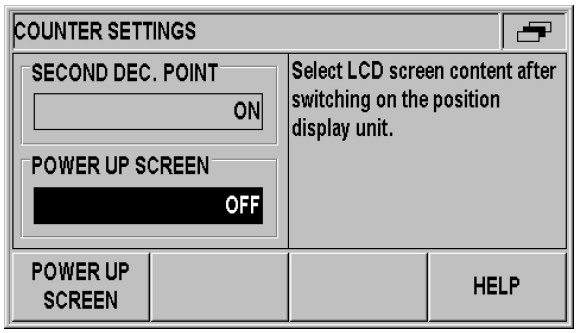

Fig. II.21 COUNTER SETTINGS form

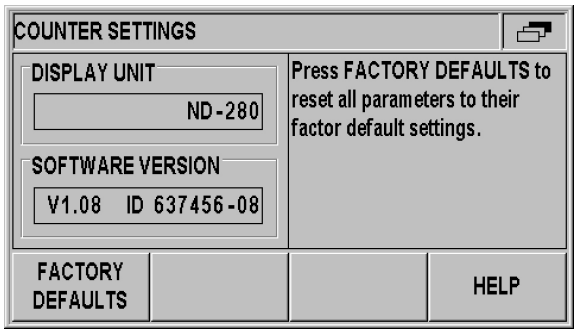

Fig. II.22 COUNTER SETTINGS form

Error compensation

The distance a cutting tool travels, measured by an encoder, can in certain cases, differ from the actual tool travel. This error can occur due to ball screw pitch error or deflection and tilting of axes.

This error can either be **linear** or **non-linear**. You can determine these errors with a reference measurement system, e.g. the **VM 101** from HEIDENHAIN. From an analysis of the error it can be determined which form of compensation is required (linear or non-linear).

The ND 280 can compensate these errors.

Only non-linear **error compensation** is available when using **rotary encoders**.

Linear error compensation (not for rotary encoders)

Linear error compensation can be applied if the results of the comparison with a reference standard show a linear deviation over the whole measuring length. In this case the ND 280 can compensate the error mathematically by calculating the **LEC correction factor**.

To calculate the linear correction factor, use the following formula:

$$LEC = \left(\frac{S - M}{M}\right) \times 10^6 \text{ppm}$$

S: length measured with reference standard
M: measured length with device at axis
ppm: parts per million
1 ppm = 10^{-6}= 1 µm/m = 1 µinch/inch

Example:

If the length of the standard you used is 500 mm and the measured length along the X axis is 499.95 mm, then the LEC for the X axis is 100 ppm:

$$LEC = \left(\frac{500 - (499,95)}{499,95}\right) \times 10^6 \text{ppm} = 100\text{ppm}$$

Entering linear error compensation

- In the INSTALLATION SETUP menu, select ERROR COMPENSATION.
- Press the ERROR COMP. soft key to select the desired type of compensation.
  - If you select OFF, no error compensation will be applied.
- 0.0 PPM: Use the numerical keys to enter the **linear** correction factor in **ppm**.
  - NONLINEAR (see "Non-linear error compensation" on page 49).
- Press ENTER to confirm your entries.

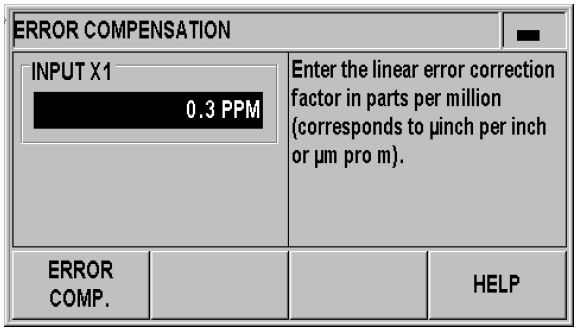

Fig. II.23 Linear error compensation form

Non-linear error compensation

- Non-linear error compensation is available for **encoders with reference marks** and for **absolute** encoders.
- If non-linear error compensation has been defined, no error compensation will be applied until the **reference marks have been crossed**.

Non-linear error compensation should be applied if the results of the comparison with a reference standard show an alternating or oscillating deviation. The ND 280 supports up to **200 correction points per axis**. The error value between two entered adjacent correction points is calculated with linear interpolation. The required correction values must be calculated and entered in an error compensation table.

For **rotary encoders, 180 correction points spaced every 2°** are predefined by the ND 280.

Selecting non-linear error compensation

- In the INSTALLATION SETUP menu, select ERROR COMPENSATION.
- Press the ERROR COMP. soft key to select NON-LINEAR.

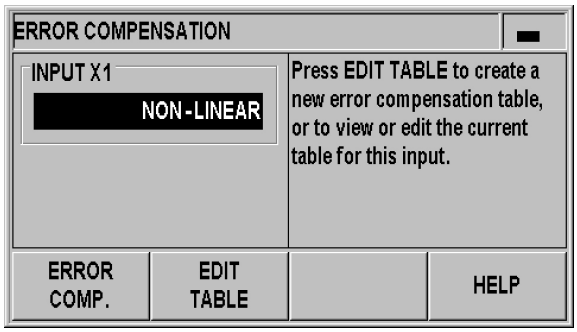

Fig. II.24 Non-linear error compensation form

Creating an error compensation table

- To start a new error compensation table, first press the EDIT TABLE soft key. This opens the ERROR COMPENSATION TABLE form.
- All correction points (up to 200) are equally spaced from the start point. Enter the distance between each of the correction points. Select POINT SPACING and press the SPACING soft key or the ENTER key. Enter a value and press ENTER.
- Enter the START point:
  - If the start point is known, enter the start point. Select START POINT and press the START POINT soft key or the ENTER key. The start point is measured from the scale's reference point.
  - If the start point is **not** known, move to the location of the start point. Please keep in mind that the reference marks must have been crossed. Press the TEACH POSITION soft key. Press the ENTER key to confirm the position.
- In the REF DISPLAY field, the ND shows the **current value of the axis to be compensated** without considering the datums entered.

After a new start point has been entered, the ND 280 will adjust the previous values in the error compensation table.

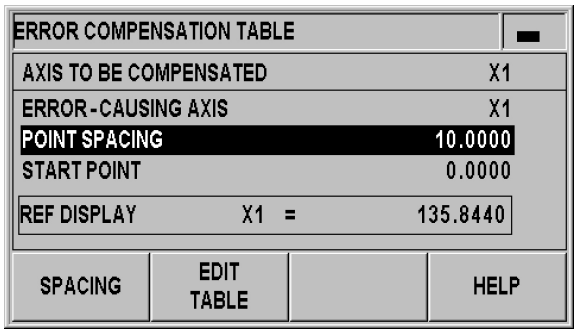

Fig. II.25 Error compensation table

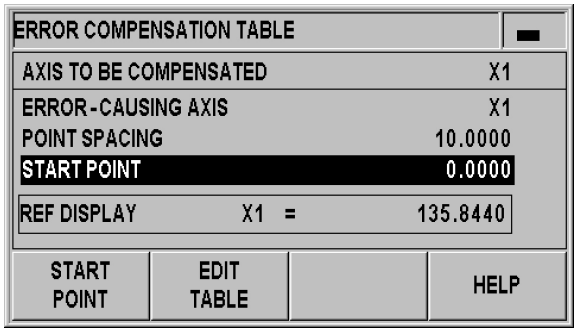

Fig. II.26 Error compensation table

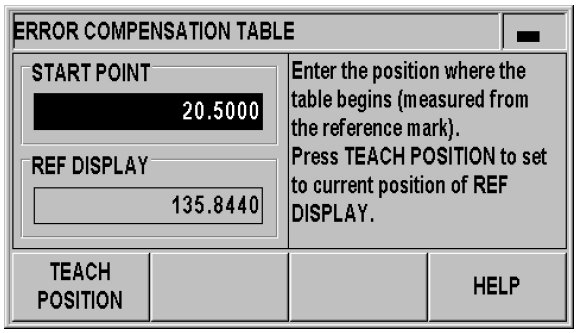

Fig. II.27 Error compensation table: Enter the START point.

Configuring an error compensation table

- Press the EDIT TABLE soft key to view the table entries.
- Use the UP/DOWN arrow key or the numeric keys to move the cursor to the correction point to be added or changed. Press ENTER to confirm your selection.
- Enter the known error which exists at this point. Confirm with the ENTER key.
- When completed, press the C key to exit the table and return to the ERROR COMPENSATION form.

Reading the graph

The ND 280 can display the error compensation table in table or graphical format. The graph shows a plot of a translation error vs. measured value. The graph has a fixed scale.

Viewing the error compensation table

- Press the EDIT TABLE soft key.
- Press the UP/DOWN arrow key or the numeric keys to move the cursor within the table.
- To switch between the table and graph views, press the VIEW soft key.
- Use the ZOOM IN or ZOOM OUT soft key to enlarge or reduce to graphic to 20 and 200 points, respectively. The enlarged graphic display can be scrolled forward or backward by 20 points by pressing the ⇐ and ⇒ soft key.

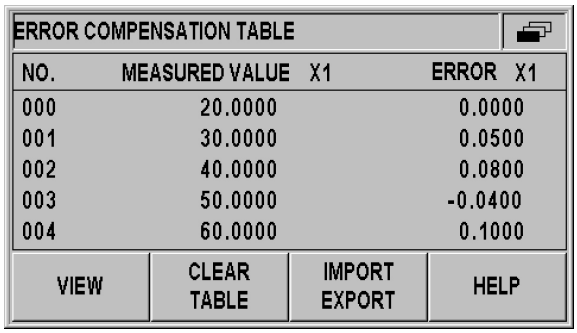

Fig. II.28 Editing an error compensation table

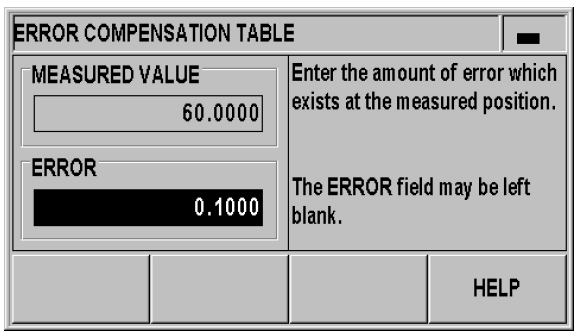

Fig. II.29 Entering the error determined for the measured value

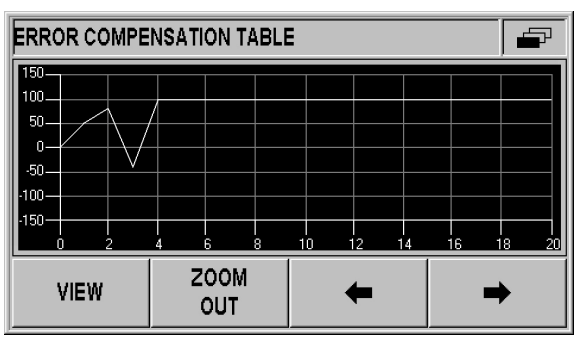

Fig. II.30 Graphic representation of compensation values

The error compensation table data may be saved to or loaded from a PC via the serial port (see "Setting up the serial port" on page 53).

Exporting the current compensation table

- Press the EDIT TABLE soft key.
- Press the IMPORT/EXPORT soft key.
- Press the EXPORT TABLE soft key.

Importing a new error compensation table

- Press the EDIT TABLE soft key.
- Press the IMPORT/EXPORT soft key.
- Press the IMPORT TABLE soft key.
- Press the IMPORT READY soft key.

ERROR COMPENSATION TABLE

NO.	MEASURED VALUE X1	ERROR X1
000	20.0000	0.0000
001	30.0000	0.0500
002	40.0000	0.0800
003	50.0000	-0.0400
004	60.0000	0.1000

IMPORT TABLE | EXPORT TABLE

Fig. II.31 Importing or exporting compensation values

ERROR COMPENSATION TABLE

NO.	MEASURED VALUE X1	ERROR X1
000	20.0000	0.0000
001	30.0000	0.0500
002	40.0000	0.0800
003	50.0000	-0.0400
004	60.0000	0.1000

IMPORT READY

Fig. II.32 Importing compensation values

Setting up the serial port

The ND 280 features two serial interfaces: **RS-232-C/V.24 (X31)** and **USB (UART, X32).**

Danger of electrical shock!

The interfaces X31 and X32 comply with the requirements of EN 50 178 for **low voltage electrical separation**.

A printer or computer with a serial data interface may be connected to the available serial ports in order to perform the following tasks:

- Sending measured values, error compensation tables or configuration files to a printer or computer.
- Receiving error compensation tables or configuration files from a computer.
- In addition, the interfaces allow external operation of the ND 280.

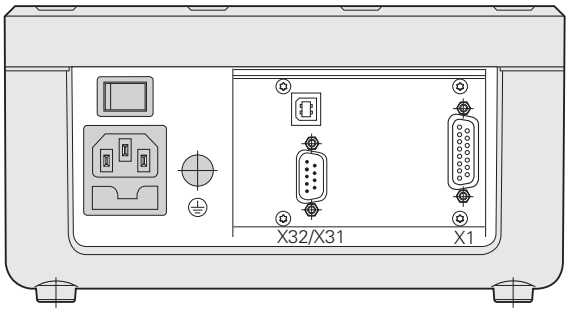

Fig. II.33 Connections

Setting up the data interface

- In the INSTALLATION SETUP menu, select INTERFACE SETTINGS.
- In the SERIAL PORT field, use the USB/RS-232 soft key to select the interface you want to use.
- The BAUD RATE field can be set to 110, 150, 300, 600, 1200, 2400, 9600, 19200, 38400, 57600 or 115200 by using the DECREASE or INCREASE soft keys.

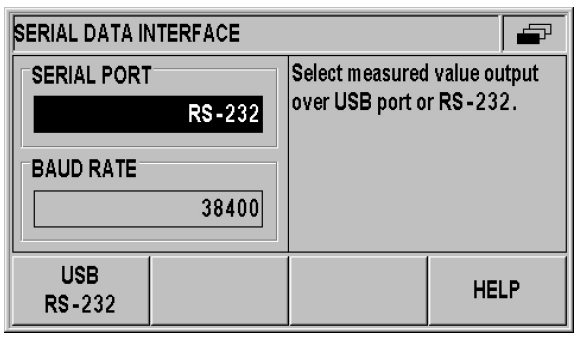

Fig. II.34 RS-232-C/V.24 data interface

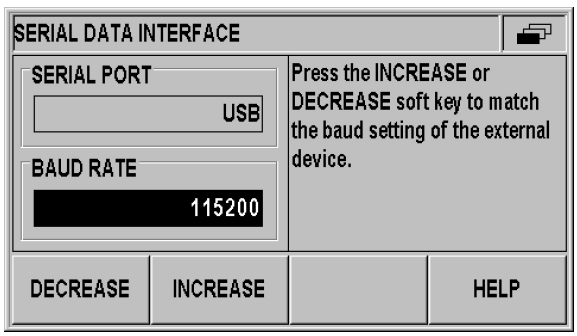

Fig. II.35 USB (UART) data interface

- Press the 7/8 soft key to set the DATA BITS field to 7 or 8.
- Press the 1/2 soft key to set the STOP BITS field to 1 or 2:
- The PARITY field can be set to NONE, EVEN or ODD using the soft keys provided.
- OUTPUT TAIL is the number of carriage returns that will be sent at the end of the transmission. The output tail is initially 0 and can be set to a positive integer value between 0 and 99 by using the numerical keys.

There is no parameter to enable or disable the serial ports. Data will only be sent to the serial port if the **external device is ready**.

For information about the cable connection, pin assignment, data input/output and external operation, see "Data interface" on page 61.

The serial port settings will be retained on a power cycle.

Data is transferred in the following sequence: Start bit, data bits, parity bit, stop bits.

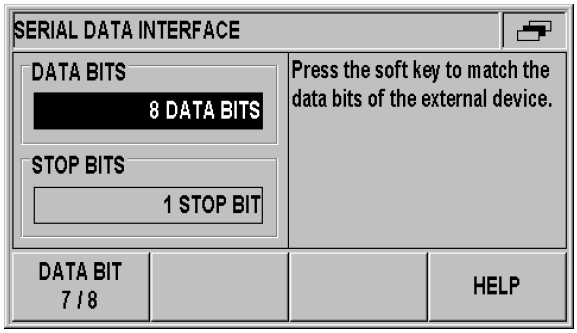

Fig. II.36 Data interface: Parameter input

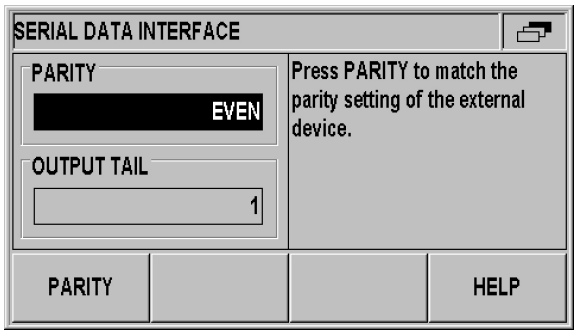

Fig. II.37 Data interface: Parameter input

Diagnostics

The DIAGNOSTICS submenu provides parameters for testing the keypad, the LCD display, the connected encoders, the supply voltages, and the function of the switching inputs/outputs (see Fig. II.38):

- In the INSTALLATION SETUP menu, select DIAGNOSTICS.
- Select the desired test. The tests are described in the following sections.

Keypad test

An image of the keypad of the ND 280 provides an indication when a key is pressed and released.

- Press each hard and soft key to test. A **dot** will appear on each key when it has been pressed indicating that it is operating properly.
- Press the C hard key twice to exit the keypad test.

Display test

LCD display test:

- To test the LCD display, press the ENTER key **three times** to set the LCD display to black with white inside, white with black inside and back to normal.

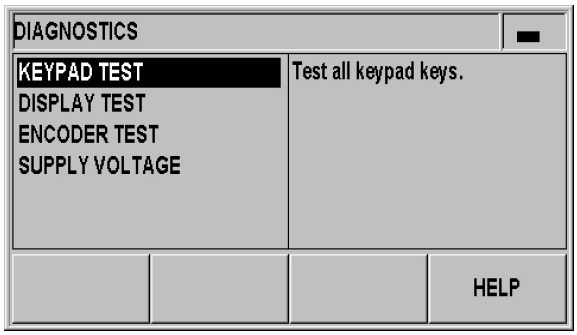

Fig. II.38 Diagnostics menu

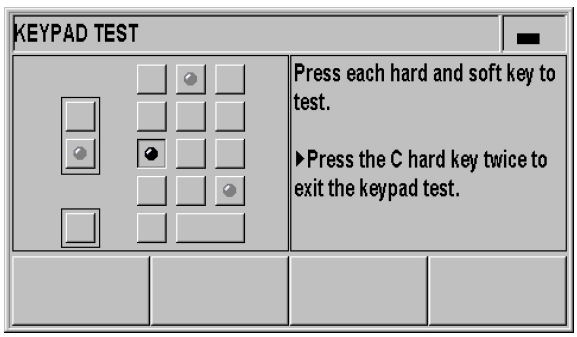

Fig. II.39 Keypad test

Encoder test

Use this test to check the signals of the 11 µApp or 1 Vpp interface, or the EnDat interface of an encoder.

Encoders with 11 µApp or 1 Vpp interface:

- As the encoder is moved, you will see the signals of the A and B channels as Lissajous figure (see Fig. II.40), as well as the amplitude, symmetry and phase offset values.

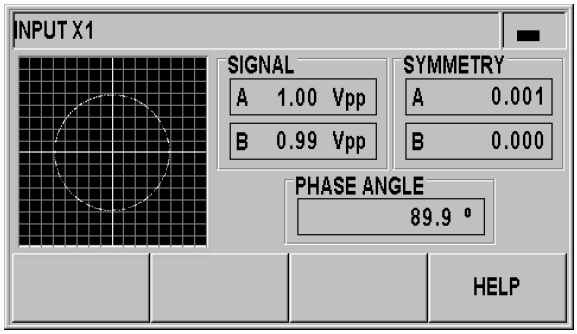

Fig. II.40 Encoder test: 1 Vpp interface

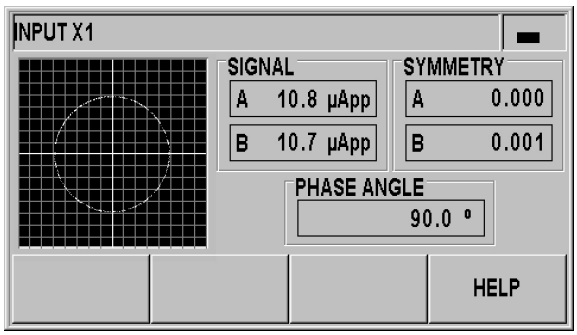

Fig. II.41 Encoder test: 11 µApp interface

Encoders with EnDat interface:

- The form displays the electronic ID label of the connected encoder: Transmission format, signal periods, measuring steps, distinguishable revolutions, ID number and serial number.
- Only for encoders with EnDat 2.2 interface: The DIAGNOSIS soft key opens a form showing the function reserve of the encoder:
  - Incremental track (INC)
  - Absolute track (ABS)
  - Position value calculation
- Press the ALARMS soft key to display the alarms that are supported by the connected encoder, and to show whether errors have occurred. A color-filled square before the respective alarm indicates the status:
  - **Gray** means that the alarm is **not** supported by the connected encoder.
  - **White** means that the alarm is supported by the connected encoder, and **no error** has occurred yet.
  - **Black** signalizes that an error has occurred.
- Press the WARNINGS soft key to display the warnings that are supported by the connected encoder, and to check whether warnings have occurred. A color-filled square before the respective warning indicates the status:
  - **Gray** means that the warning is **not** supported by the connected encoder.
  - **White** means that the warning is supported by the connected encoder, and **no warning** has occurred yet.
  - **Black** signalizes that a warning has occurred.
- To clear alarms or warnings that have occurred, press the RESET soft key when the ALARMS or WARNINGS window is open.

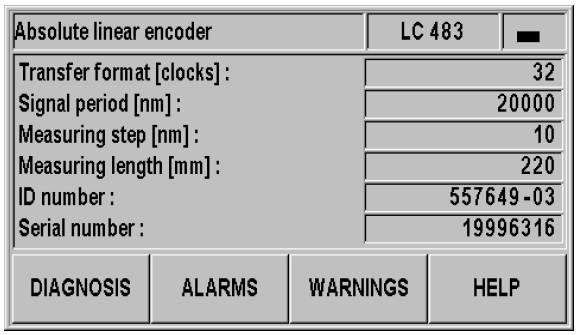

Fig. II.42 Encoder test: EnDat interface

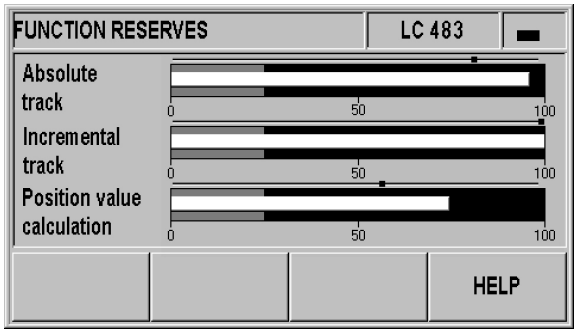

Fig. II.43 Encoder test: EnDat 2.2 interface

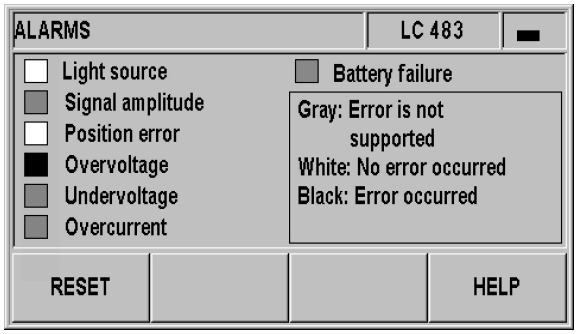

Fig. II.44 Encoder test: EnDat interface

Power supply

Check the supply voltage at encoder input X1. It should normally be slightly above 5 V in order to ensure that the voltage level at the encoder input complies with the specification (5 V ± 5%) even at greater cable lengths.

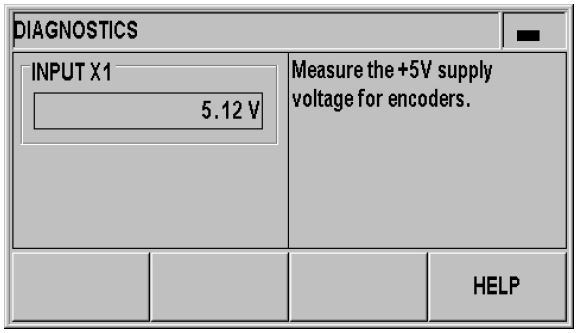

Fig. II.45 Power supply

II – 3 Encoder parameters

Table values

The following tables represent a partial list of HEIDENHAIN encoders. These tables describe the operating parameters which you must set for the encoders. Most entries can be found in the operating instructions for your encoder.

HEIDENHAIN linear encoders

Encoder	Signal period	Reference marks
SPECTO ST 12/30	20 µm	Single
METRO MT 60/101	10 µm	Single
METRO MT 12xx/25xx	2 µm	Single
CERTO CT 25xx/60xx	2 µm	Single
LS 388C	20 µm	Coded/1000
LS 487 LS 487C	20 µm	Single Coded/1000
LS 186 LS 186C	20 µm	Single Coded/1000
LF 183 LF 183C	4 µm	Single Coded/5000
LB 382 LB 382C	40 µm	Single Coded/2000
LC 183 LC 483	Self-configuring	None Absolute
LIDA 18x LIDA 48x	40 µm	Single
LIDA 28x	200 µm	Single
LIDA 583	20 µm	Single
LIF 181R LIF 181C	8 µm	Single Coded/5000
LIF 581R LIF 581C	8 µm	Single Coded/5000

HEIDENHAIN rotary encoders

Encoder	Signal period	Reference marks
ROD 48x ERN x80	1000 ... 5000	Single
ROC 425 ECN x25	Self-configuring	None Absolute
ROQ 437 EQN 437	Self-configuring	None Absolute
ROD 280 ROD 280C	18000	Single Coded/36
RON 28x RON 28xC	18000	Single Coded/36
RON 785 RON 785C	18000	Single Coded/36
RON 886 RON 886C	36000	Single Coded/72
RCN 22x	Self-configuring	None Absolute
RCN 729 RCN 829	Self-configuring	None Absolute

II – 4 Data interface

Data communication

The ND 280 features two serial interfaces: **RS-232/V.24 (X31)** and **USB (UART, X32)**.

Danger to internal components!

The interfaces X31 and X32 comply with the requirements of EN 50 178 for **low voltage electrical separation**.

Do not engage or disengage any connecting elements while the unit is under power!

The serial ports support both bi-directional data communication, which allows data to be exported to or imported from an external device, and external operation of the ND 280 via the data interface.

Data which can be exported from the ND 280 to an external serial device includes:

- Job and installation configuration parameters
- Non-linear error compensation tables
- Measured value output

Data which can be imported into ND 280 from an external device includes:

- Key commands
- Job and installation configuration parameters
- Non-linear error compensation tables
- Software updates (firmware update)

This chapter covers what you need to know about **setting up** the data interface:

- Serial data transfer with the Import or Export function
- Software update (firmware update) installation
- Wiring of the connecting cable at the ND 280
- External operation

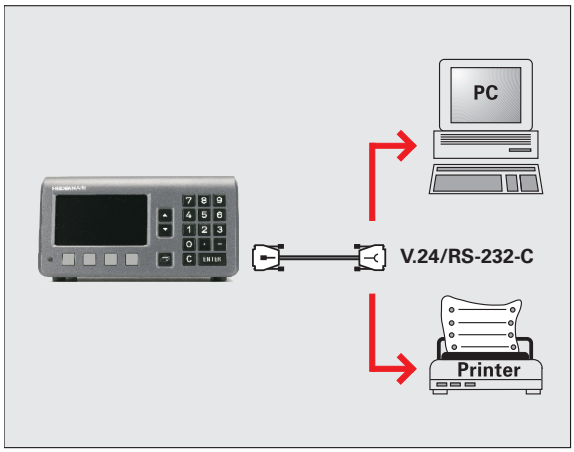

Fig. II.46 Data communication via RS-232-C/V.24

Serial data transfer with the Import or Export function

The serial ports **RS-232/V.24 (X31)** and **USB Type B (UART, X32)** are located on the rear panel. The following devices can be connected to these ports (see "Wiring the connecting cable" on page 65):

- Printer with serial data interface
- Personal computer (PC) with serial data interface

Danger to internal components!

The interfaces X31 and X32 comply with the requirements of EN 50 178 for **low voltage electrical separation**.

Do not engage or disengage any connecting elements while the unit is under power!

Define the system parameters for data transfer (see "Setting up the serial port" on page 53).

For operations that support data transfer, the ND 280 displays the IMPORT/EXPORT soft key. Press this soft key to call the two following soft keys:

- Press IMPORT to receive data from a computer.
- Press EXPORT to send data to a computer or printer.

Data transfer from the ND 280 to a printer

To export data to a serial port **printer**, press the EXPORT soft key. The ND 280 exports the data in an ASCII text format which can be printed directly.

Data transfer from the ND 280 to a PC

To export or import data between the ND 280 and a PC, the PC must use terminal communications software, such as HyperTerminal, which is included with Windows ®, or **TNCremo**. TNCremo is available from HEIDENHAIN free of charge. You will find the software on the HEIDENHAIN website at **www.heidenhain.de** on the downloads page under**Documentation and Information**.

Contact your HEIDENHAIN distributor for further details. This software processes the data being sent or received over the serial cable link. All data transferred between the ND 280 and the PC is in ASCII text format.

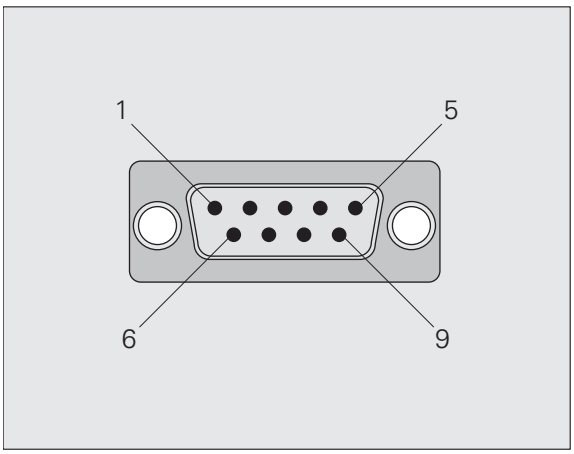

Fig. II.47 Connector for RS-232-C/V.24

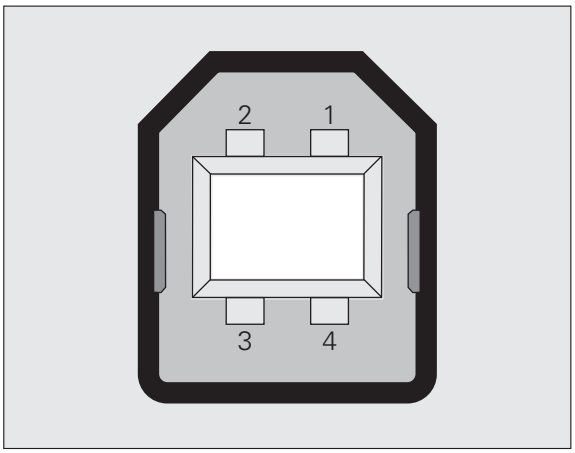

Fig. II.48 USB Type B socket (UART)

To export data from the ND 280 to a PC, the PC must first be made ready to receive the data to save it to a file. Set up the terminal communication program to capture ASCII text data from the COM port to a file on the PC. After the PC is ready to receive, start the data transfer by pressing the ND 280's EXPORT soft key.

Importing data into the ND 280 from a PC

To import data into the ND 280 from a PC, the ND 280 must first be made ready to receive the data:

- Press the IMPORT soft key. After the ND 280 is ready, set up the terminal communications program on the PC to send the desired file in ASCII text format.

Data format

The data format can be defined in the INSTALLATION SETUP menu under INTERFACE SETTINGS (see "Setting up the serial port" on page 53).

The ND 280 does not support communication protocols such as Kermit or Xmodem.

Control characters

Measured value retrieval:	STX (CTRL B)
Interruption:	DC3 (CTRL S)
Continuation:	DC1 (CTRL Q)
Error message enquiry:	ENQ (CTRL E)

For examples of measured value output, refer to "Measured value output" on page 74.

Software update (firmware update) installation

If required, you can download a software update (firmware update) for your ND from the HEIDENHAIN website. You will find the update at **www.heidenhain.de** on the downloads page under **Documentation and Information**.

To install the software update (firmware update):

- Connect your PC to the serial port **USB Type B (UART, X32)**, see "Wiring the connecting cable" on page 65.

Danger to internal components!

The interfaces X31 and X32 comply with the requirements of EN 50 178 for **low voltage electrical separation**.

Do not engage or disengage any connecting elements while the unit is under power!

A software update can be installed only over the USB interface, and **not** over the **RS-232/V.24 (X31)** interface.

- The device driver must be installed on your PC in order to transmit data over the USB port, see "Wiring the connecting cable" on page 65.
- Double-click the file to start the software update (firmware update) on the PC.
- **Simultaneously** press and hold the C key and the ENTER key on the ND **while switching the ND on**. The ND displays the currently installed hardware and firmware versions and is now ready for a software download (firmware download), see Fig. II.49.
- Start the update by pressing the **Start** button on the PC.
- Wait until the software installation (firmware) has been completed. The ND will automatically restart and will then display the **initial screen**.
- Press the LANGUAGE soft key if you want to change the conversational language and press ENTER.
- Press any key to call the standard screen. The ND is now ready for operation (see "ND 280 power-up" on page 18).
- Close the installation window on the PC.

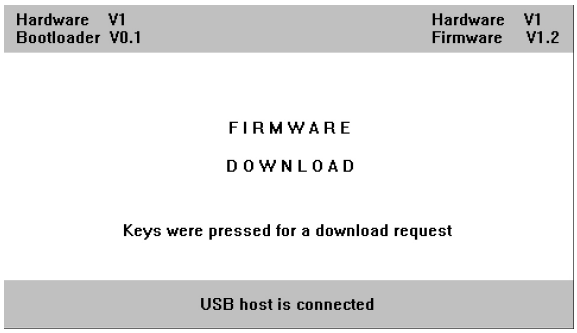

Fig. II.49 Software update (firmware update)

Wiring the connecting cable

The wiring of the connecting cable depends on the device being connected (see technical documentation for external device).

Complete wiring of RS-232-C/V.24 (X31)

Before the ND 280 and your PC can communicate, they need to be connected to each other with a serial cable.

RS-232-C / V.24 data transfer cable
D-sub (female) 9-pin/D-sub (female) 9-pin

ID 366964-xx

Pin	Assignment	Function
1	Do not assign	
3	TXD	Transmitted data
2	RXD	Received data
7	RTS	Request to send
8	CTS	Clear to Send
6	DSR	Data set ready
5	SIGNAL GND	Signal ground
4	DTR	Data terminal ready
9	Do not assign	

Signal level

Signal	Signal level "1" = "active"	Signal level "0"= "inactive"
TXD, RXD	–3 V to –15 V	+3 V to +15 V
RTS, CTS DSR, DTR	+3 V to +15 V	–3 V to –15 V

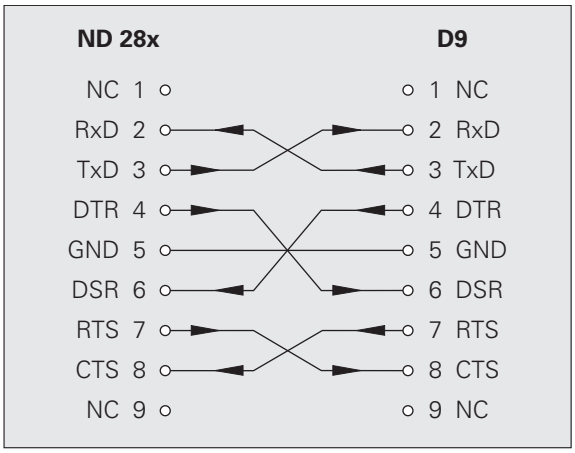

Fig. II.50 Pin assignment for serial port with handshaking

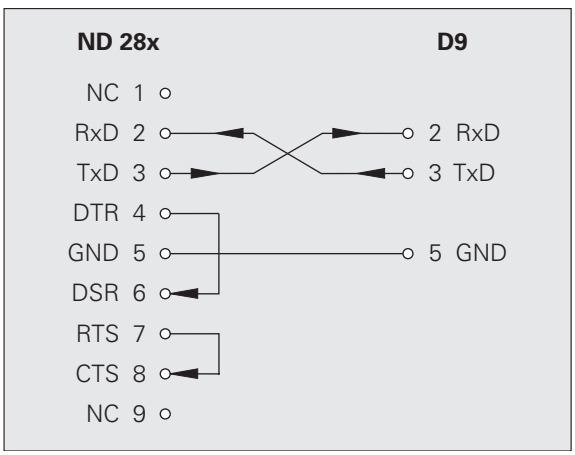

Fig. II.51 Pin assignment for serial port without handshaking

USB Type B (UART), socket as per IEC 61076-3-108

Pin	Assignment	Function
1	VCC	+5 V
2	D–	Data (inverse)
3	D+	Data
4	GND	Signal ground

If you want to connect your position display unit to a PC via the USB interface, you need a special USB driver. You will find the driver file for Windows 2000, XP, Vista and 7 in the installation directory of the TNCremo software or on the HEIDENHAIN website at **www.heidenhain.de** on the downloads page under **Documentation and Information**.

After downloading the software, run the respective file. Then connect your position display unit to the PC, and switch the position display unit on. Then you can install the USB driver with the Windows hardware wizard, which will start automatically.

Cable length: Max. 5 m

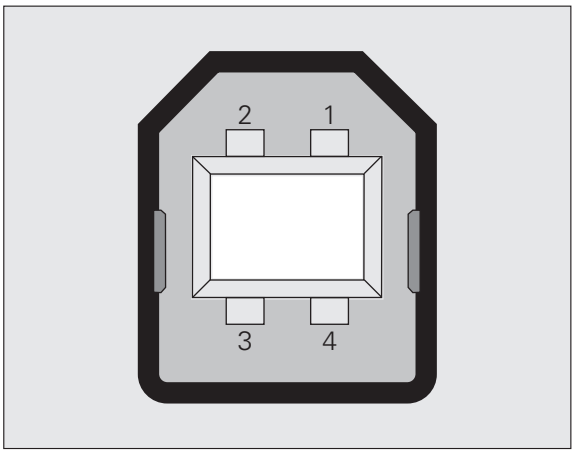

Fig. II.52 Pin assignment USB Type B socket

External operation via RS-232-C/V.24 or USB interface

Key commands

You can operate the ND 280 remotely over the RS-232-C/V.24 (X31) or USB (UART, X32) data interface using an external device. The following key commands are available:

Format	
<ESC>TXXXX<CR>	Key is pressed
<ESC>AXXXX<CR>	Output of screen contents
<ESC>FXXXX<CR>	Execute function
<ESC>SXXXX<CR>	Execute special function

Sequence of commands	Function
<ESC>T0000<CR>	Key '0'
<ESC>T0001<CR>	Key '1'
<ESC>T0002<CR>	Key '2'
<ESC>T0003<CR>	Key '3'
<ESC>T0004<CR>	Key '4'
<ESC>T0005<CR>	Key '5'
<ESC>T0006<CR>	Key '6'
<ESC>T0007<CR>	Key '7'
<ESC>T0008<CR>	Key '8'
<ESC>T0009<CR>	Key '9'
<ESC>T0100<CR>	CLEAR key
<ESC>T0101<CR>	Key '–'
<ESC>T0102<CR>	Key '.'
<ESC>T0103<CR>	Navigation key
<ESC>T0104<CR>	Key 'ENTER'
<ESC>T0105<CR>	Key 'Cursor Up'
<ESC>T0106<CR>	Key 'Cursor Down'
<ESC>T0107<CR>	Key 'Soft key 1' (left)
<ESC>T0108<CR>	Key 'Soft key 2'
<ESC>T0109<CR>	Key 'Soft key 3'
<ESC>T0110<CR>	Key 'Soft key 4' (right)

Sequence of commands	Function
<ESC>A0000<CR>	Output of device identification
<ESC>A0100<CR>	Output of position display value
<ESC>A0200<CR>	Output of actual position
<ESC>A0301<CR>	Output of error message
<ESC>A0400<CR>	Output of software ID number
<ESC>A0800<CR>	Output of status bar
<ESC>A0900<CR>	Output of status indicators

Sequence of commands	Function
<ESC>F0000<CR>	Toggle REF function
<ESC>F0002<CR>	Print

Sequence of commands	Function
<ESC>S0000<CR>	Reset position display
<ESC>S0001<CR>	Lock keypad
<ESC>S0002<CR>	Release keypad

Description of key commands

The ND supports the XON-XOFF protocol when executing commands:

- As soon as the internal character buffer is full (100 characters), the ND sends the control character **XOFF** to the transmitter.
- After the buffer has been executed, the ND sends the control character **XON** to the transmitter and is then ready to receive data again.

Key is pressed (TXXXX commands)

- The ND acknowledges every correctly received key command by transmitting the control character **ACK** (Acknowledge, CTRL F). Then the ND executes the key command.
- The ND responds to commands that cannot be identified or to invalid commands by sending the control character **NAK** (No acknowledge, CTRL U).

Output of screen contents (AXXXX commands)

- The ND responds to valid commands by sending the control character **STX** (Start of text, CTRL B) before outputting the text.
- The ND responds to commands that cannot be identified or to invalid commands by sending the control character **NAK** (No acknowledge, CTRL U).

Output of device identification:

- Device name
- ID number of the currently installed software
- Version number of the currently installed software

<STX>					N	D	-	2	8	0	<CR>	<LF>
		6	4	6	1	1	8	-	0	1	<CR>	<LF>
						V	1	-	0	1	<CR>	<LF>
1	2										3	

1 STX control character: 1 character
2 Device identification: 10 characters
3 End of line: 2 characters

Output of position display value:

<STX>	-	1	2	3	4	5	.	6	7	8	9	<CR>	<LF>
4	5											6	

4 STX control character: 1 character
5 Displayed position value: 10 - 13 characters, depending on the number of decimal points and decimal places
6 End of line: 2 characters

Output of current position:

<STX>	+	1	2	3	4	5	6	7	8	9	<CR>	<LF>
7	8										9	

7 STX control character: 1 character
8 Current position: 10 characters, without decimal point, with leading zeros
9 End of line: 2 characters

Output of error message:

- The error text displayed in the message line is transmitted.
- This functions only if an error message is displayed.

<STX>	E	R	R	O	R		X	1	:	I	N	P	U	T		F	R		
	E	Q	U	E	N	C	Y		T	O	O		H	I	G	H	!	<CR>	<LF>
10	11																	12	

10 STX control character: 1 character
11 Error message: 35 characters
12 End of line: 2 characters

Output of software ID number:

<STX>		6	3	7	4	5	6	-	0	1	<CR>	<LF>
13	14										15	

13 STX control character: 1 character
14 ID number of the currently installed software: 10 characters
15 End of line: 2 characters

Output of status bar:

<STX>	0	3	0	1	0	0	1	2	<CR>	<LF>
16	a	b	c	d	e	f	g	h	17	

16 STX control character: 1 character
a-h Parameter values of the status bar: 8 characters
17 End of line: 2 characters

Column	Parameter					
a	Operating mode	0 = Actual Value	1 = Distance-To-Go			
b	Display mode for axis and coupled axes	0 = X1				
c	Scaling factor	0 = Not active	1 = Active			
d	Compensation	0 = No compensation	1 = Error compensation or axis-error compensation is active			
e	Stopwatch	0 = Stopped	1 = Stopwatch is running			
f	Unit of measure	0 = mm	1 = Inches	2 = DEG	3 = DMS	4 = rad
g	Datum	1 = Datum 1	2 = Datum 2			
h	Soft-key page	1 = Page 1	2 = Page 2	3 = Page 3	4 = Keyboard is locked	

Output of status indicators

<STX>	0	0	0	1	0	0	1	0	0	0	0	1	<CR>	<LF>
18	a	b	c	d	e	f	g	h	i	j	k	l	19	

18 STX control character: 1 character
a-l Parameter values of the status display: 12 characters
19 End of line: 2 characters

The ND sends the status of the symbols in the status display:

0 = Symbol not active (gray)
1 = Symbol active (black)
2 = Symbol flashing

Column	Parameter	Meaning
a-i	Not active	
j	SET	Datum setting
k	REF	Reference mark evaluation
l	Not active	

Execute function (FXXXX commands)

- The ND acknowledges every correctly received key command by transmitting the control character **ACK** (Acknowledge, CTRL F). Then the ND executes the key command.
- The ND responds to commands that cannot be identified or to invalid commands by sending the control character **NAK** (No acknowledge, CTRL U).

Functions:

- **Toggle REF function**: Deactivate or activate REF mode (currently active REF status is changed).
- **Print**: Transmit the current measured value; same function as **Output Measured Values** with STX (CTRL B, see "Measured value output" on page 74).

Execute special function (SXXXX commands)

Functions:

- **Reset the position display**: Function same as switching the position display unit off/on.
- **Lock keyboard**: The ND acknowledges the special function by transmitting the control character **ACK** (Acknowledge). All keys of the ND are locked. The ND can be operated only by external key commands. The keypad can be released either by transmitting the special function **Release keypad** or by switching the position display unit off and then back on.
- **Release keypad**: The ND acknowledges the special function by transmitting the control character **ACK** (acknowledgment). Then it releases the keypad that has been locked with **Lock keypad**.

II – 5 Measured value output

Alternatives for starting measured value output

With a PC, there are two ways to start measured value output from the ND 280: With **CTRL B** or the PRINT soft key over the serial port X31 or X32.

Measured-value output via the serial data interface X31 or X32

Danger to internal components!

The interfaces X31 and X32 comply with the requirements of EN 50 178 for **low voltage electrical separation**.

Do not engage or disengage any connecting elements while the unit is under power!

Use the PRINT soft key or the **CTRL B** command to transmit the currently displayed values in either Actual Value or Distance-To-Go mode, whichever is currently active (see "Operating modes" on page 25), via either the RS-232-C/V.24 or the USB interface to a PC.

CTRL B command:

- RS-232-C/V.24 interface:
  If the ND receives the **CTRL B** command over the RXD line of the interface, it transmits the measured values back over the TXD line (see "Data interface" on page 61).
- USB Type B:
  This interface supports bidirectional data communication. Data transfer is started with the **CTRL B** command.

Data transfer:

- The measured values can be received and saved using a terminal program (e. g. HyperTerminal, which is included with Windows ®). You can also use the **TNCremo** software. TNCremo is available from HEIDENHAIN free of charge. You will find the software at **www.heidenhain.de** on the downloads page under **Documentation and Information**.
- The basic program (see Fig. II.53) shows the fundamental structure of a program for measured value output.

Propagation times

Event	Time
Latching delay t_1	$t_1 \leq 1$ ms
Measured-value output after t_2	$t_2 \leq 50$ ms
Regeneration time t_3	$t_3 \geq 0$ ms

```
10   L%=18
20   CLS
30   PRINT "V.24/RS-232-C"
40   OPEN "COM1:9600,E,7" AS#1
50   PRINT #1, CHR$ (2);
60   IF INKEY$<>""THEN 130
70   C%=LOC(1)
80   IF C%<L%THEN 60
90    X$=INPUT$(L%,#1)
100  LOCATE 9,1
110  PRINT X$;
120  GOTO 50
130  END
```

Fig. II.53 Basic program for measured value output with CTRL B

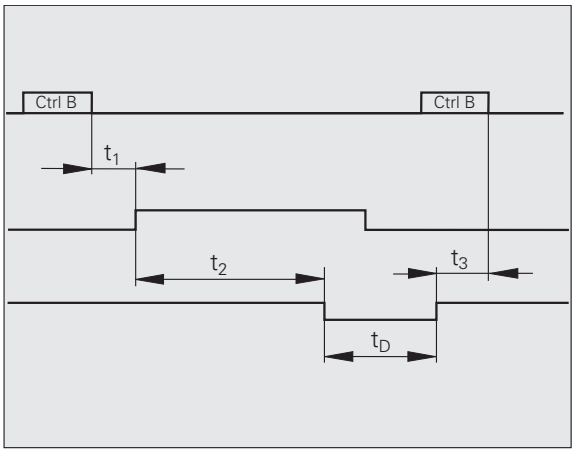

Fig. II.54 Propagation times for measured value output after CTRL B

Duration of measured value transfer

$$t_D = \frac{187 + (11 \bullet L)}{B}$$

t_D Duration of measured value transfer in [s]
L: Number of blank lines
B: Baud rate

Example: Data sequence during measured-value output

Measured value: X = - 5.23 mm

Measured value output:

-	5.23					<CR>	<LF>
1	2	3	4	5	6	7	8

1 +/– sign
2 Numerical value with decimal point: 10 characters on the whole, leading zeros are output as blank spaces.
3 Blank space
4 Unit of measure: **Blank space** = mm, **"**= inches, **G** = degrees, **M** = DMS, **R** = rad, **?** = fault
5 Blank space
6 Blank space
7 Carriage return
8 Blank line (Line Feed)

II – 6 Input and output of parameter list and error compensation table

Text file

You can receive the lists output by the ND via the serial data interface as **text files in ASCII format** and save them on your PC.

To export or import data between the ND 280 and a PC, the PC must use terminal communications software, such as HyperTerminal, which is included with Windows ®, or **TNCremo**. TNCremo is available from HEIDENHAIN free of charge. You will find the software at **www.heidenhain.de** on the downloads page under **Documentation and Information**.

- Each list must be saved as a **separate text file**.
- You can then use the terminal program to transmit the text files back to the ND.
- If you want, you can edit the text files with a **text editor** and change the parameter values, for example. However, this requires **knowledge of the different output formats of the lists** (see following pages). When receiving lists, the ND expects the same list structure as used for the output.
- When receiving lists, the ND firsts waits for the **starting character** < # >.
- The receiving mode ends as soon as the ND has received the **final character** < # >.

The lists received are first checked for the **type** of position display unit (line 2 of output list). The receiving ND accepts only lists prepared by the same type of position display unit. For example, if the ND 280 receives a parameter list from the ND 287, it generates the message "**ERROR DURING RECEPTION Incorrect data file.**" in the window to the right. Acknowledge the message with the C key.

Furthermore, the ND checks the list for **completeness**. Lists that contain, for example, too many or too few parameters are ignored. If an error occurs, the ND also displays an error message:
ERROR DURING RECEPTION Incorrect data file. Acknowledge the error message with the C key.

If the ND receives **invalid parameter values**, it sets the respective operating parameters to the **default settings**.

Example: P01 LINEAR = 3
The value **3** is not allowed. The parameter P01 is set to the default setting: P01 LINEAR = 0

Output format of the parameter list

First line

Each parameter list output begins with the start character < # > (HEX: 0x23).

#	<CR>	<LF>
1		

1 Start character and end of line: 3 characters

Second line

Model of position display unit and unit of measure

N	D	-	2	8	0								D	E	G			<CR>	<LF>
2													3					4	

2 Model of display unit, left-aligned: 13 characters
3 Unit of measure: 6 characters
4 End of line: 2 characters

Subsequent lines for the individual parameters

Example:

P	0	1											L	I	N	E	A	R		=											<CR>	<LF>
5																			6		7										8	

5 Parameter designation left-aligned and text right-aligned: 19 characters
6 Separator block: 3 characters
7 Parameter value, right-aligned: 13 characters
8 End of line: 2 characters

For parameter P98, the parameter value can be more than 13 characters long!

Last line

Each parameter list output ends with the final character < # > (HEX: 0x23).

#	<CR>	<LF>
9		

9 Final character and end of line: 3 characters

Example of a parameter list

The parameter text is always sent in English.

The parameter value, not the text, is definitive when the parameters are transferred to the ND. The values in **boldface type are the default settings**.

ND 280 with rotary encoder connected to input X1

Parameter				Meaning
#				Start character (#)
ND-280	DEG			Model: ND-280, Unit of measure: DEG, DMS or rad
P01	LINEAR =		0	Unit of measure for linear dimensions: **mm = 0**, inches = 1
P02	ANGULAR =		0	Unit of measure for angular dimensions: **DEG = 0**, DMS = 1, rad = 2
P03	ENC. TYPE =		1	Encoder type: **Linear = 0**, Rotary = 1
P04	ENC. SIGNAL =		1	Encoder signal: 0 = 11 µA, **1 = 1 Vpp**, 2 = EnDat
P06	ANGLE =		0	Angle format: **0 = +/– 180°**, 1 = 360° , 2 = +/– infinity
P10	SCALING =		0	Scaling: **0 = off**, 1 = on
P11	SCL. FACTOR =	+	1.000000	Scale factor: **1.000000** (default setting)
P20	BRIGHTNESS =		94	Brightness of LCD screen: 0 - 100 % (**80 %** is the default setting)
P21	DISP. SAVER =		1	Screen saver: 0 = off, **1 = on**
P22	SAVER TIME =		120	Idle time before screen saver is activated: **120 min** is the default setting
P23	START.DISPL. =		1	Power-up screen: 0 = off, **1 = on**
P30	DIRECTION =		0	Count direction: **0 = positive**, 1 = negative
P31	SIGN.PERIOD =		20	Signal period: 20 µm (**10 µm** is the default setting)
P32	SP/R =		36000	Signal periods per revolution: **36000** is the default setting
P33	COUNT MODE =		5	Counting mode: **0 - 5 = 5**, 0 - 2 = 2, 0 - 1 = 1
P34	DP PLACES =		4	Decimal places: **4** is the default setting
P35	REF ON/OFF =		1	Reference mark: 0 = off, **1 = on**
P36	REF MARK =		5	**0 = single reference mark**, 1..6: coded reference marks
P37	ALARM =		3	0 = off, 1 = frequency, 2 = contamination, **3 = frequency and contamination**
P39	SCREW:PITCH =		88.123456	Screw pitch in mm (multiturn rotary enc.), **10 mm** is the default setting
P40	ENC. COMP. =		2	Axis error compensation: **0 = off**, 1 = linear, 2 = non-linear
P41	LIN. COMP. =	+	0.0	Linear compensation: **0.0 µm/m** (default setting)

Parameter				Meaning
P50	RS232/USB =		1	Interface: **0 = RS232**, 1= USB
P51	BAUD RATE =		11	Baud rate = 115200 (0 - 11), **7** is the default setting
P52	DATA BIT =		0	Data bits: **0 = 7 bits** , 1 = 8 bits
P53	STOP BIT =		0	Stop bit: **0 = 2 stop bits**, 1 = 1 stop bit
P54	PARITY BIT =		1	Parity bit: 0 = none, **1 = even**, 2 = odd
P55	BLANK LINE =		1	Blank lines: **1** (0 - 99)
P60	PRESET =	+	0.0000	Value for preset via external signal: **0.0000**
P96	LANGUAGE =		1	Local language: 0 - 9, 0 = English, **1 = = German**, 2 = French, 7 = Japanese, 9 = Chinese (simplified)
#				Final character (#)

Output format of the error compensation table

The ND outputs a separate error compensation table for each axis to be compensated.

First line

Each error compensation table output begins with the start character < # > (HEX: 0x23).

#	<CR>	<LF>
1		

1 Start character and end of line: 3 characters

Second line

Model of position display unit and unit of measure

N	D	-	2	8	0									M	M				<CR>	<LF>
2													3						4	

2 Model of display unit, left-aligned: 13 characters
3 Unit of measure: 6 characters
4 End of line: 2 characters

Third line

Output of axis to be compensated:

A	X	I	S		X	1								=						0	<CR>	<LF>
5													6			7					8	

5 Axis to be compensated, left-aligned: 13 characters
6 Separator block: 3 characters
7 Axis value, right-aligned: 6 characters
8 End of line: 2 characters

Fourth line

Output of compensation point spacing (only for linear encoders):

S	P	A	C	I	N	G								=				+				1	0	.	0	0	0	0	<CR>	<LF>
9													10					11										12	

9 Spacing: 13 characters
10 Separator block: 3 characters
11 Value for spacing, right-aligned: 13 characters
12 End of line: 2 characters

Fifth line

Output of datum point for compensation (only for linear encoders):

D	A	T	U	M										=			+					0	.	0	0	0	0	<CR>	<LF>
13													14				15											16	

13 Datum: 13 characters
14 Separator block: 3 characters
15 Value for datum, right-aligned: 13 characters
16 End of line: 2 characters

Sixth line

Output of compensation value no. 0:

C	O	M	P	.	N	0	.		0	0	0			=				+					0	.	0	0	0	0		=	
17													18				19												20		
		+					0	.	0	0	0	0	<CR>	<LF>																	
21													22																		

17 Compensation number zero, left-aligned: 13 characters
18 Separator block: 3 characters
19 Compensation position zero, right-aligned: 13 characters
20 Separator block: 3 characters
21 Compensation value zero, right-aligned: 13 characters
22 End of line: 2 characters

Subsequent lines for further compensation values

Output of compensation values 1 - 199 for linear measurements (1 - 179 for angular measurements):

C	O	M	P	.	N	0	.		1	9	9			=				+		1	9	9	0	.	0	0	0	0		=	
23													24				25												26		
		+					0	.	1	2	3	5	<CR>	<LF>																	
27													28																		

23 Compensation number 199, left-aligned: 13 characters
24 Separator block: 3 characters
25 Compensation position 199, right-aligned: 13 characters
26 Separator block: 3 characters
27 Compensation value 199, right-aligned: 13 characters
28 End of line: 2 characters

Last line

Each error compensation table output ends with the final character < # > (HEX: 0x23).

#	<CR>	<LF>
29		

29 Final character and end of line: 3 characters

Examples of error compensation tables

ND 280 with linear encoder connected to input X1

Parameter	Meaning
#	Start character (#)
ND-280 MM	Model: ND-280, unit of measure MM or IN (inches)
AXIS X1 = 0	Axis to be compensated
SPACING = + 10.0000	Point spacing: 10 mm (value input)
DATUM = + 0.0000	Datum: 0 mm (value input)
COMP.NO.000= + 0.0000=+0.0000	Compensation value 0 = 0.0000 mm (Compensation value 0 is always 0.0000 mm.)
COMP.NO.001= + 10.0000= ...	Compensation value 1 = No value entered
COMP.NO.002= + 20.0000= ...	Compensation values 2 - 199 = No values entered **Axis will not be compensated**.
COMP.NO.003= + 30.0000= ...	
COMP.NO.004= + 40.0000= ...	
COMP.NO.005= + 50.0000= ...	
COMP.NO.006= + 60.0000= ...	
COMP.NO.007= + 70.0000= ...	
COMP.NO.008= + 80.0000= ...	
COMP.NO.009= + 90.0000= ...	
COMP.NO.010= + 100.0000= ...	
COMP.NO.011= + 110.0000= ...	
COMP.NO.012= + 120.0000= ...	
COMP.NO.013= + 130.0000= ...	
COMP.NO.014= + 140.0000= ...	
COMP.NO.015= + 150.0000= ...	
COMP.NO.016= + 160.0000= ...	
COMP.NO.017= + 170.0000= ...	
COMP.NO.018= + 180.0000= ...	
...	
COMP.NO.190= + 1900.0000= ...	

Parameter	Meaning
COMP.NO.191= + 1910.0000= ...	
COMP.NO.192= + 1920.0000= ...	
COMP.NO.193= + 1930.0000= ...	
COMP.NO.194= + 1940.0000= ...	
COMP.NO.195= + 1950.0000= ...	
COMP.NO.196= + 1960.0000= ...	
COMP.NO.197= + 1970.0000= ...	
COMP.NO.198= + 1980.0000= ...	
COMP.NO.199= +1990.0000= ...	
#	Final character (#)

II – 7 Specifications for

ND 280

Specifications	
Axes	One axis
Encoder input	■ Incremental HEIDENHAIN encoders ■ Sinusoidal signals 11 μA_{PP}, input frequency max. 100 kHz ■ Sinusoidal signals 1 V_{PP}, input frequency max. 500 kHz ■ Absolute HEIDENHAIN encoders with EnDat interface (purely serial) Possible signal periods for linear and rotary encoders: ■ For rotary encoders: 1 - 999 999.999 ■ For linear encoders: 0.000 000 01 µm - 99 999.9999 µm
Display step	■ Linear axes: 0.5 mm to 0.001 µm, depending on the signal period ■ Rotary axes: 0.5° to 0.000001° (00°00’00.1”), depending on the signal period
Display	Monochrome display for position values, dialog and input display, graphic functions, graphic positioning aid ■ **Status display:** Operating mode, axis, scale factor, compensation, stopwatch, unit of measure, datum number, soft-key row ■ Position display and measured-value display with selectable display resolution
Conversational language	English, German, French, Japanese, Chinese (simplified)
Functions	■ Multilingual user guidance ■ REF reference-mark evaluation for distance-coded or single reference marks ■ Display for lengths or angles ■ Distance-To-Go or Actual Value operating mode ■ Two datums ■ Scaling factor ■ Stopwatch ■ Reset or Preset function ■ Linear or non-linear error compensation for **axis-error compensation** ■ **Diagnostics function** for testing the encoder, the keyboard, the screen and the supply voltage ■ **Data transfer** of measured values and compensation values, configuration parameters or software downloads via a serial interface ■ **Integrated help system**
Error compensation	■ Linear axes: Linear and non-linear (up to 200 compensation points) ■ Rotary axes: Non-linear (180 fixed compensation points spaced at 2°)

Specifications	
Data interface	Two serial interfaces: ■ **RS-232-C/V.24** 110 to 115 200 baud ■ **USB Type B** (UART) You can use only one interface for data transfer at a time. The data transfer software **TNCremo** is available for free on the HEIDENHAIN website at **www.heidenhain.de** on the downloads page under **Documentation and Information**.
Optional accessories	■ Mounting base for installation in a 19-inch electrical cabinet ■ Adapter cables with D-sub connector for HEIDENHAIN encoders ■ Length gauge with D-sub connector ■ Data transmission cable for RS-232-C/V.24 interface ■ Data transmission cable for USB interface
Power connection	100 V~ to 240 V~; 50 Hz to 60 Hz
Line fuse	2 x T500 mA
Power	Max. 30 VA
Electromagnetic compatibility/ CE compliance	The encoder fulfills the requirements for electromagnetic compatibility according to 2004/108/EEC with respect to the generic standards for ■ Noise immunity (IEC 61000-6-2) ■ Emission (IEC 61000-6-4)
Operating temperature	0 °C to 50 °C (32 °F to 122 °F)
Storage temperature	–40 °C to 85 °C (–40 °F to 185 °F)
Relative air humidity	Annual mean: < 75 % In exceptional cases: < 90 %
Protection (IEC 60529)	IP 40 rear panel, IP 54 front panel
Weight	Approx. 2.5 kg (5.5 lb.)
Housing	Benchtop design, cast-metal housing
Housing dimensions	Width: 211 mm, height: 112 mm (including feet), depth: 251 mm (including connector)

II – 8 Dimensions

ND 280

Dimensions in mm

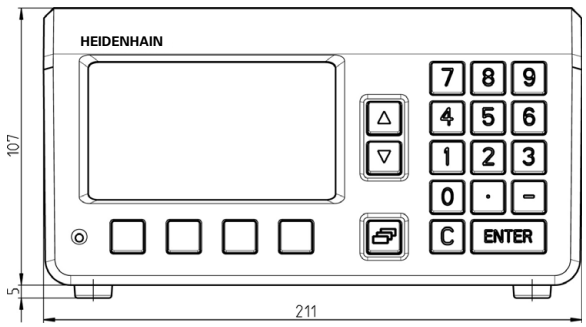

Front view with dimensions

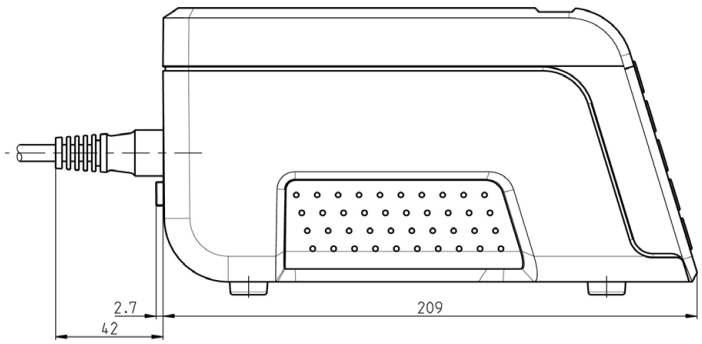

Side view with dimensions

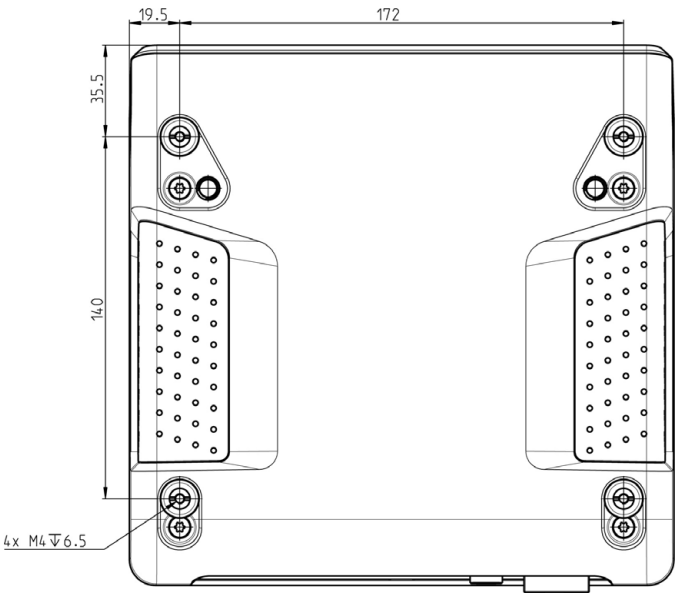

Bottom view with dimensions

Dimensions in mm

Tolerancing ISO 8015
ISO 2768 - m H
< 6 mm: ±0.2 mm

II – 9 Accessories

ID numbers for accessories

ID number	Accessories
654020-01	Mounting base for installation in a 19-inch electrical cabinet, packaged
366964-xx	Data transfer cable for RS-232-C/V.24 interface, packaged
354770-xx	Data transfer cable for USB interface, packaged

Mounting base for installation in 19-inch electrical cabinet

ID number
654020-01

Dimensions (mm)

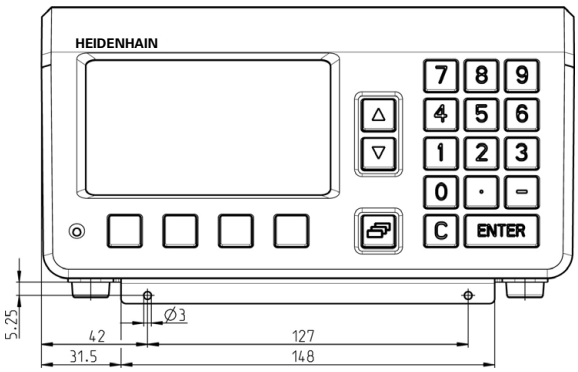

Front view with dimensions

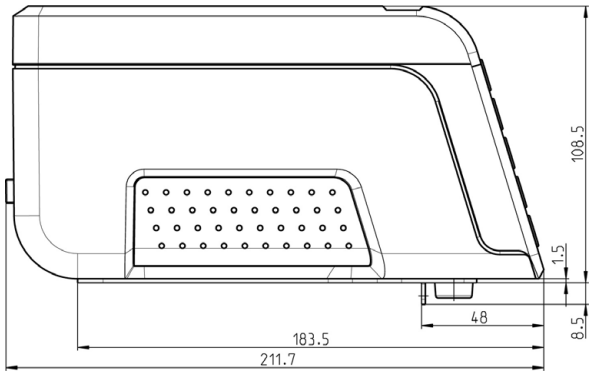

Side view with dimensions

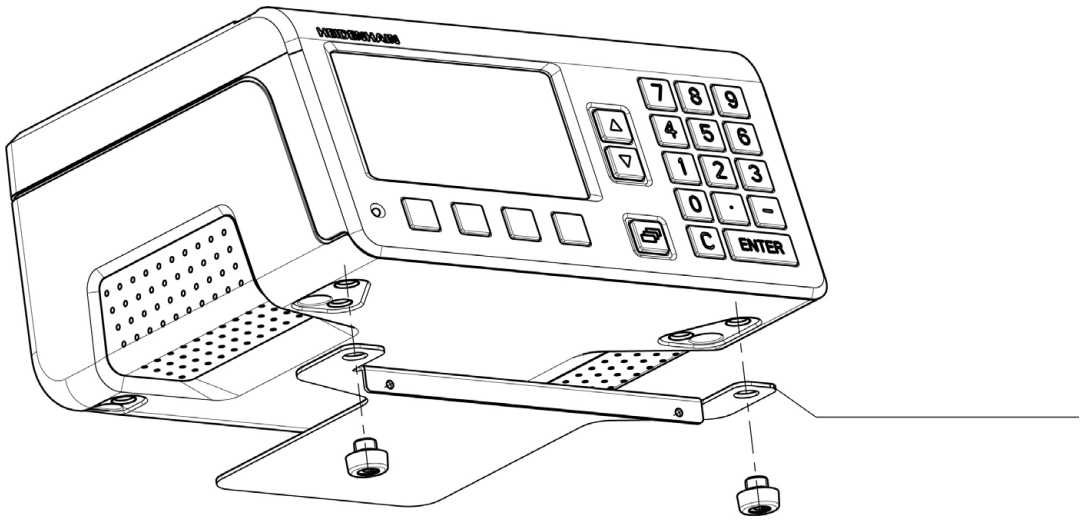

Dimensions in mm

Tolerancing ISO 8015
ISO 2768 - m H
< 6 mm: ±0.2 mm

3-D view, secure the mounting base with two M4 x 6 screws to the electrical cabinet.

A
Absolute coordinates ... 15
Absolute datum ... 13
Absolute position encoders ... 16
Absolute workpiece positions ... 15
Accessories ... 34, 89
Actual position ... 14
Actual Value/Distance-To-Go soft key ... 25

B
Basic functions ... 18

C
C key ... 22
CE compliance ... 36
Connecting cable, wiring ... 65
Console adjustment ... 31
Counter settings ... 46

D
Data input ... 22
Data input forms ... 24
Data interface ... 61
Data transfer
- Control characters ... 63
- Data format ... 63
- from PC ... 63
- Signal level ... 65
- to a printer ... 62
- to PC ... 62

Datum setting ... 26, 30
Datums ... 13
Diagnostics ... 55
- Display test ... 55
- Encoder test ... 56
- Keypad test ... 55
- Power supply ... 58

Dimensions ... 88
Display configuration ... 45
Display value, setting ... 26
Distance-coded reference marks ... 17
Distance-to-go ... 14

E
Electrical connection ... 37
Electrical requirements ... 37
Electromagnetic compatibility (EMC) ... 36
Encoder parameters ... 59
Encoder setup ... 41
- Absolute encoder ... 44
- Incremental linear encoder ... 42
- Incremental rotary encoder ... 43
- Multiturn rotary encoder ... 44

Encoders, connecting the 38
ENTER key ... 22
Environmental conditions ... 35
Error compensation ... 47
- Error compensation table, creating... ... 50
- Linear ... 48
- Non-linear ... 49

Error compensation table ... 50
- Configuring ... 51
- Examples ... 84
- Export ... 52
- Graph, viewing... ... 51
- Import ... 52
- Output format ... 81
- Viewing ... 51

Error messages ... 24, 32
External operation ... 67

F
Factory defaults ... 46
Firmware update ... 64
Fixed reference marks ... 17
Fundamentals of positioning ... 13

G
Grounding ... 37

H
Help system ... 23

I
Incremental coordinates ... 15
Incremental position encoders ... 16
Incremental workpiece positions ... 15
Installation setup ... 40
INSTALLATION SETUP menu ... 40
Instruction box ... 24
Instruction messages ... 24
Integrated help system ... 23
Interface, setting up... ... 53
Items supplied ... 34

J
Job Setup ... 25
Job Setup menu ... 27, 40

K
Keypad, using the... ... 22

L
Language (setting) ... 31
Linear encoders from HEIDENHAIN ... 59

M
Maintenance ... 38
Measured value output ... 74
- Via data interface ... 74

Mirror ... 29
Mounting ... 35
Mounting and installation ... 35
Mounting base ... 90
Mounting location ... 35

N
ND, power-up ... 18
ND, shutdown ... 19
NO REF soft key ... 19
Nominal position ... 14
Non-linear error compensation ... 49

O
Operating modes ... 25
Optional accessories ... 34

P
Parameter list
- Example ... 79
- Input and output ... 77
- Output format ... 78

Passcode ... 40
Position encoders ... 16
Position feedback ... 16
Possible applications ... 12
Power connector ... 37
Power-up ... 18
Preventative maintenance ... 38

R
REF ... 16
Reference mark evaluation ... 19
Reference marks ... 17
    Crossing over ... 19
    Not crossing over ... 19
Repair ... 38
Rotary encoders from
  HEIDENHAIN ... 60
RS-232-C/V.24 interface ... 53, 61

S
Scaling factor ... 29
Screen layout ... 20
Serial data transfer ... 62
Serial port ... 53
Soft key LIST OF TOPICS ... 23
Soft key mm/inch ... 28
Soft-key functions ... 21
Software update (firmware
  update) ... 64
Specifications ... 86
Stacking ... 35
Standard screen ... 20
Stopwatch (setting) ... 30

U
Unit of measure, setting ... 28
Up/Down arrow keys ... 22
Update ... 64
USB interface ... 53, 61, 66

V
Value for datum point ... 30

W
Wiring the connecting cable ... 65
    RS-232-C/V.24 ... 65
    USB ... 66

HEIDENHAIN

DR. JOHANNES HEIDENHAIN GmbH
Dr.-Johannes-Heidenhain-Straße 5
83301 Traunreut, Germany
☏ +49 8669 31-0
FAX +49 8669 5061
E-mail: info@heidenhain.de

Technical support FAX +49 8669 32-1000
Measuring systems ☏ +49 8669 31-3104
E-mail: service.ms-support@heidenhain.de
TNC support ☏ +49 8669 31-3101
E-mail: service.nc-support@heidenhain.de
NC programming ☏ +49 8669 31-3103
E-mail: service.nc-pgm@heidenhain.de
PLC programming ☏ +49 8669 31-3102
E-mail: service.plc@heidenhain.de
Lathe controls ☏ +49 8669 31-3105
E-mail: service.lathe-support@heidenhain.de

www.heidenhain.de

662205-22 · Ver02 · pdf · 11/2013