SENC 50

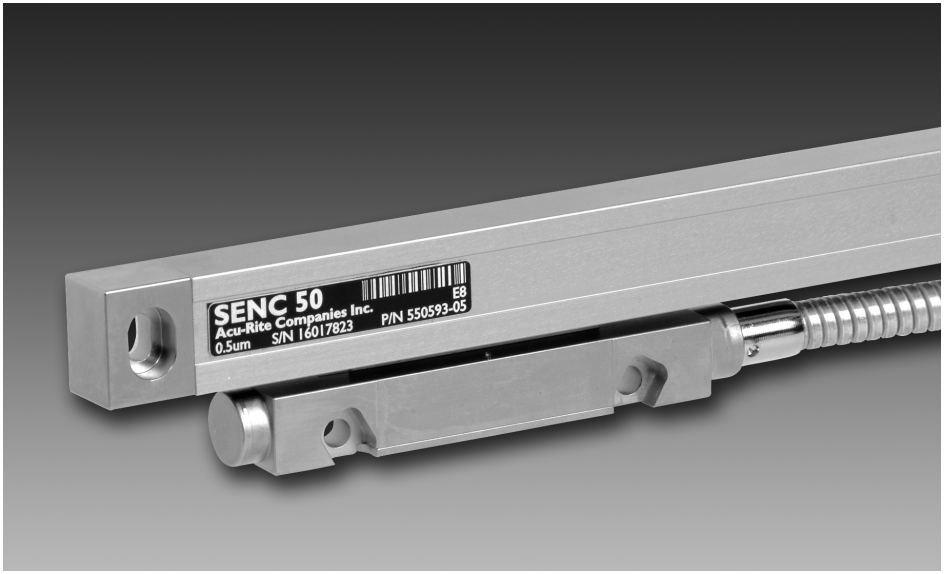

REFERENCE MANUAL

ACU-RITE®

AMI

Automation and Metrology
8808 Tyler Blvd, Mentor, OH 44060

1-888-354-2525 | sales@auto-met.com
Request a quote: auto-met.com

	Page
Introduction / Supplied items	2
Key Points / Tolerances	3
Linear Encoder Dimensions	4
Spar Dimensions	5
Mounting Requirements	6
Typical Mounting	7
Encoder Installation Procedure	8
Checking the Installation	10
Electrical Shielding	11
Troubleshooting	12
Mechanical Specifications	13
Output Signals and Pin-Outs	14
Electrical Specifications	15
Warranty	16

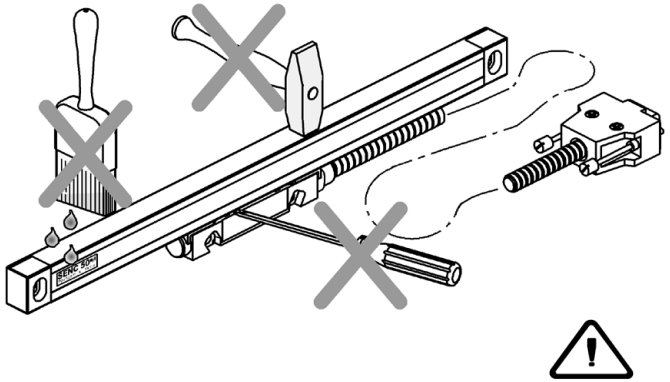

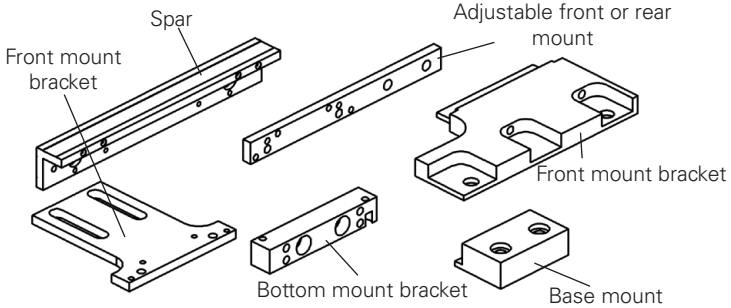

- Installation brackets and kits are available.
- Your Authorized Distributor can assist you in selecting brackets and tools for your installation.

The SENC 50 Precision Glass Scale Linear Encoder provides the accuracy and reliability of an ***ACU-RITE***® measuring system in a very small cross-section with digital output (analog output available). Features and options include:

- Resolutions of 0.5, 1.0 or 5µm.
- Accuracy grades of ± 3 or ± 5 µm / 1000mm.
- Position Trac or 50mm interval Reference Mark.
- Vinyl or Armor cables of 5, 13, & 19 ft. lengths.
- Mounting fasteners, center supports, and backup spar.
- Installation tools, brackets, and accessories.

The SENC 50 is especially useful for applications with limited space such as X/Y stages and compact metrology equipment. Contact your Authorized Distributor for assistance with selection of product options and accessories.

For future ordering information or warranty service, record the linear encoder catalog and serial numbers.

	Catalog #	Serial #	Manufacture Code #
Axis # 1:			
Axis # 2:			
Axis # 3:			
Axis # 4:			

Date of Purchase _____

Distributor: _____

Address: _____

Telephone: _____

Shipping carton contents

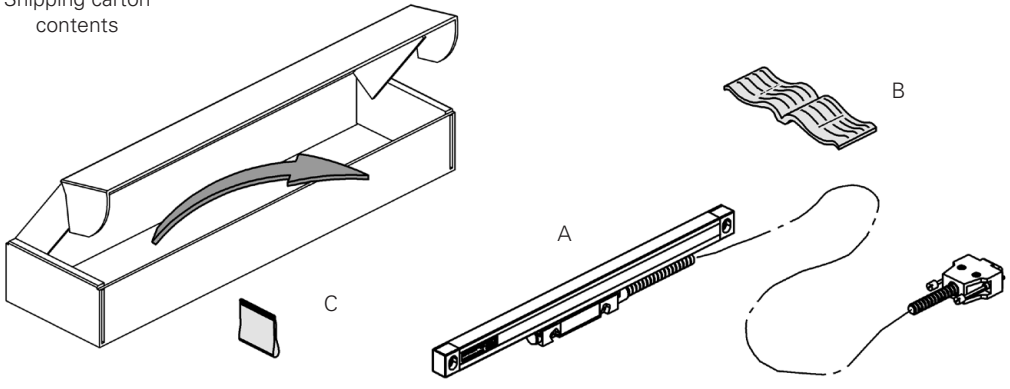

A) SENC 50 linear encoder
B) Reference Manual
C) Encoder and Cable Mounting Hardware

Use this information to plan your Linear Encoder installation.

- Understand your mounting requirements.
- Follow kit instructions when using an ***ACU-RITE***® bracket kit.
- Mount encoders close to ways to insure system accuracy.
- Mount with lip seals down and away from the work area.
- Brackets should be short and rigid.
- Surfaces must be in good condition, clean and free of dirt and paint.
- ⚠ Do not remove shipping brackets until instructed.
- Shipping bracket spacers can be used to insure .059″ gap.
- Mount from either side to obtain desired cable exit direction.

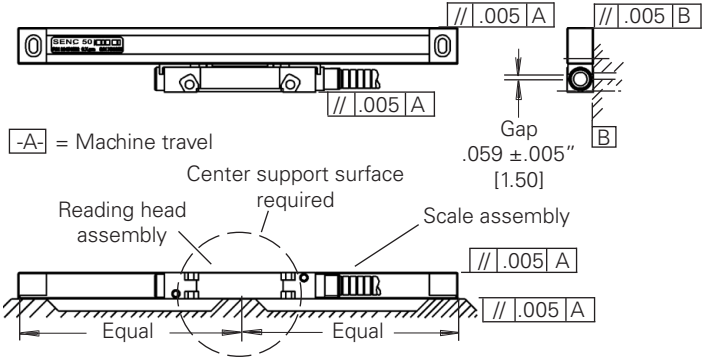

- Tolerances of .005″ TIR apply to all mounting dimensions.
- Center support surface required for all measuring lengths when not using a back up spar.

Shipping bracket removal clearance

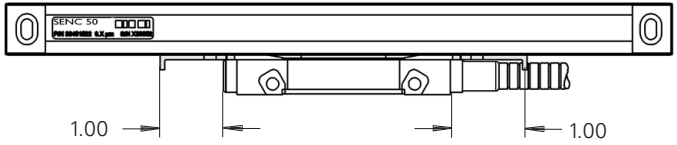

Slide brackets away
from the reading head

- Allow clearance for shipping bracket removal.

Total head travel

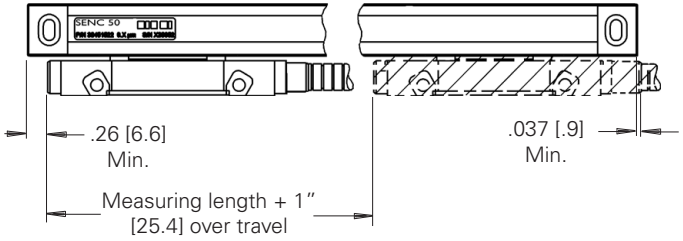

- Limit equipment travel to less than measuring length.

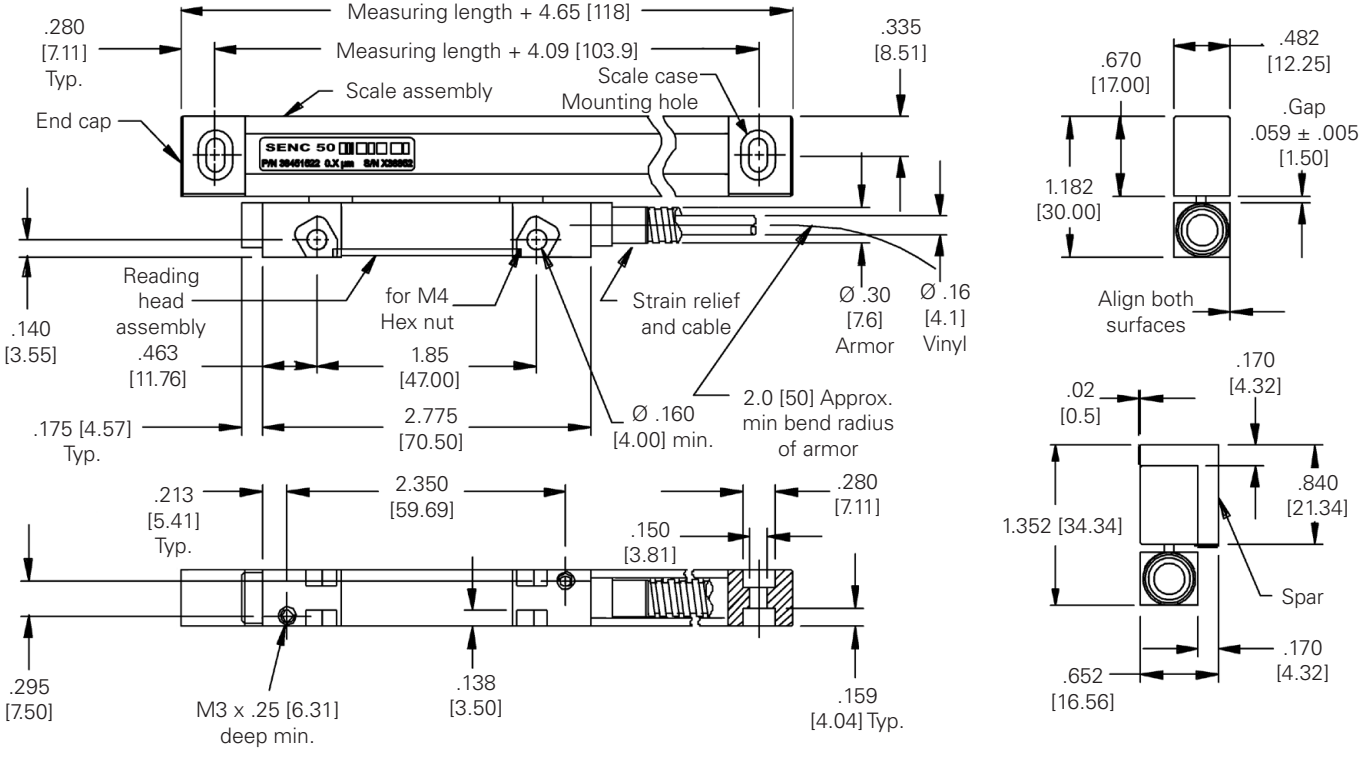
Measuring length + 4.65 [118]
Measuring length + 4.09 [103.9]
.280
[7.11]
Typ.
.335
[8.51]
Scale assembly
Scale case
Mounting hole
End cap
SENC 50
Reading
head
assembly
.463
[11.76]
.140
[3.55]
for M4
Hex nut
Strain relief
and cable
Ø .30
[7.6]
Armor
Ø .16
[4.1]
Vinyl
1.85
[47.00]
2.775
[70.50]
.175 [4.57]
Typ.
Ø .160
[4.00] min.
2.0 [50] Approx.
min bend radius
of armor
.213
[5.41]
Typ.
2.350
[59.69]
.280
[7.11]
.150
[3.81]
.295
[7.50]
M3 x .25 [6.31]
deep min.
.138
[3.50]
.159
[4.04] Typ.
.670
[17.00]
.482
[12.25]
.Gap
.059 ± .005
[1.50]
1.182
[30.00]
Align both
surfaces
.170
[4.32]
.02
[0.5]
.840
[21.34]
1.352 [34.34]
Spar
.170
[4.32]
.652
[16.56]

Backup spar Part Number	Linear Encoder Measuring Length	L	A	X No. Places	B
680803-01	1	5.650	.825	2	4.000
680803-02	2	6.650	.825	2	5.000
680803-03	3	7.650	1.325	2	5.000
680803-04	4	8.650	1.825	2	5.000
680803-05	5	9.650	2.325	2	5.000
680803-06	6	10.650	2.825	2	5.000
680803-07	7	11.650	3.325	2	5.000
680803-08	8	12.650	3.825	2	5.000
680803-09	9	13.650	1.825	3	5.000

Backup spar Part Number	Linear Encoder Measuring Length	L	A	X No. Places	B
680803-10	10	14.650	2.325	3	5.000
680803-11	11	15.650	2.825	3	5.000
680803-12	12	16.650	3.325	3	5.000
680803-13	13	17.650	3.825	3	5.000
680803-14	14	18.650	1.825	4	5.000
680803-15	15	19.650	2.325	4	5.000
680803-16	16	20.650	2.825	4	5.000
680803-18	18	22.650	1.325	3	10.000
680803-20	20	24.650	2.325	3	10.000

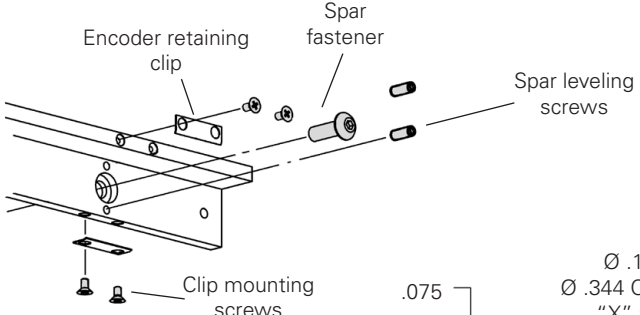

Backup spar mounting optional for all lengths

Backup spar mounting

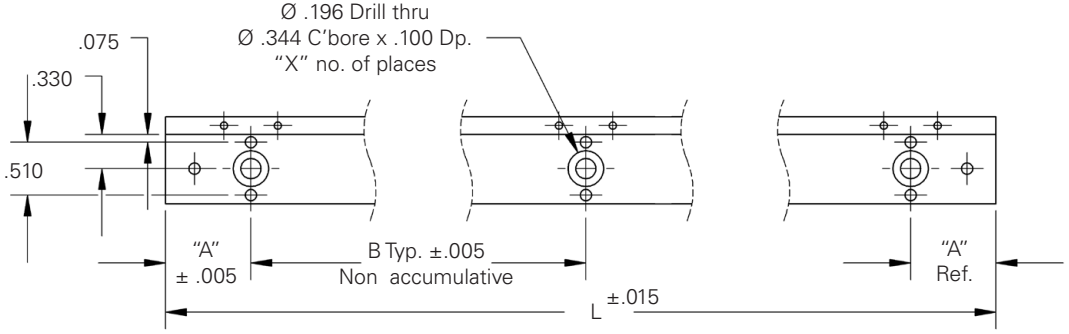

Mounting options can be adapted to machine mounting surfaces using spacers, standoffs, and leveling screws.

- Measuring length and mechanical configuration of your equipment determines your options.
- Length related mounting options shown.
- When a backup spar is used, mount the backup spar following the same procedure as required for mounting without a backup spar, using the same tolerances.

End mounting holes

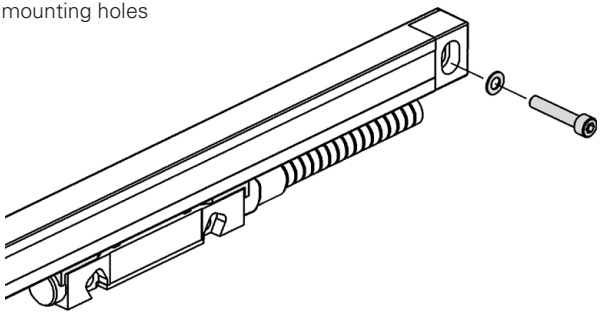

- 7″ and smaller: End mounting holes with encoder mounted to a continuous flat surface, or with center surface on same plane as end mounting surfaces.

Center support assembly

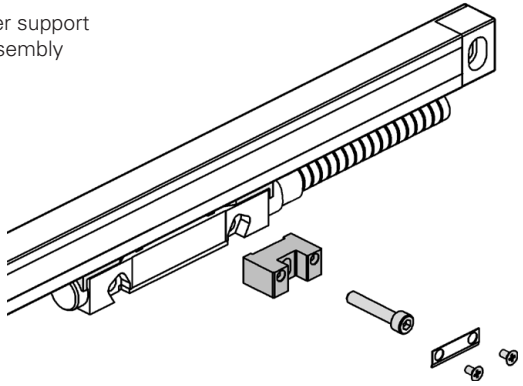

- 8″ and larger: End mounting holes with center support.

A variety of mounting conditions can be accommodated.

- Mechanical configuration of the equipment determines brackets and adapters required to install the linear encoder.
- Three typical conditions are shown for reference.

Spar mounting

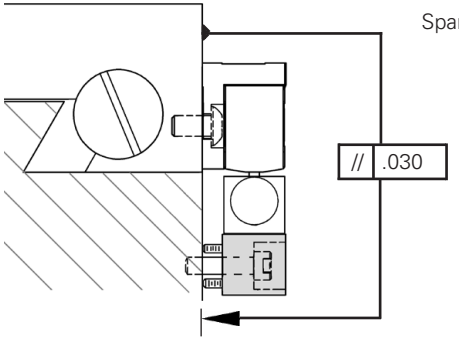

- Flush or offset mounting surfaces using a spar.
- Reading head mounting bracket required (bottom mounting bracket example shown).

Flush mounting surfaces

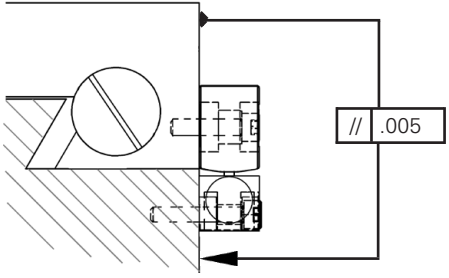

- Mounting surfaces are flush within .005".
- Installation without a backup spar.

Offset mounting surfaces

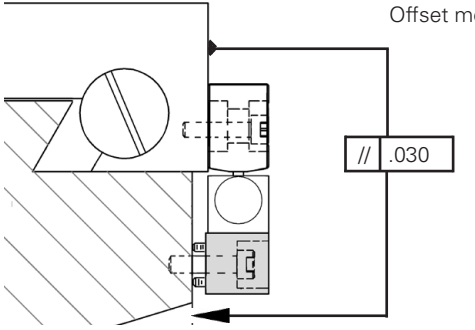

- Offset mounting surfaces using a reading head bracket.

These steps apply to all mounting conditions. Although this may not pictorially represent your application, your installation procedure should follow these steps.

- ⚠ ***ACU-RITE*** ® Bracket Kit instructions supercede this section.
- General steps for small X & Y stage.
- Adjust drill depths and fastener lengths as required.
- Contact your Authorized Distributor if assistance is required.

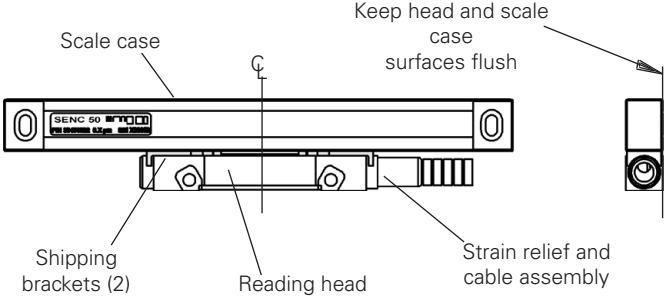

- Center the reading head on the scale case by sliding the head and shipping brackets together along the scale case.

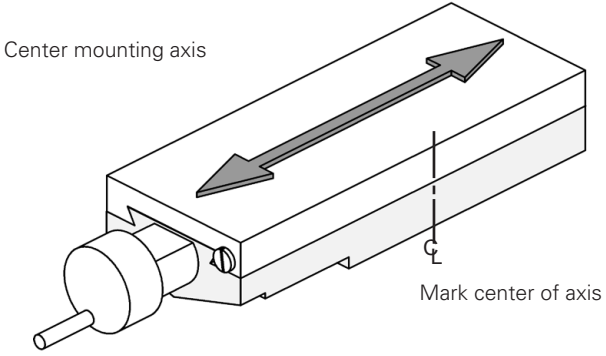

- Center the axis.
- Mark the axis for easy return to center.

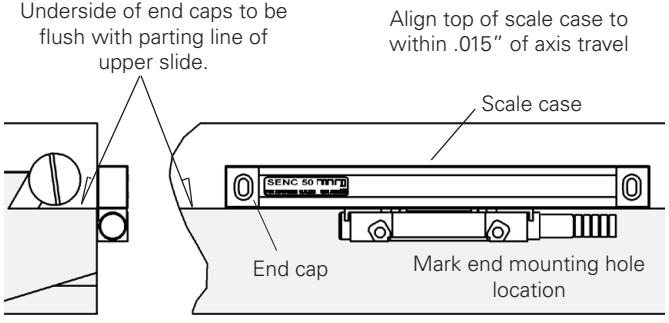

- Locate the linear encoder along the axis parting line.
- Mark location of one end mounting hole in the scale case.

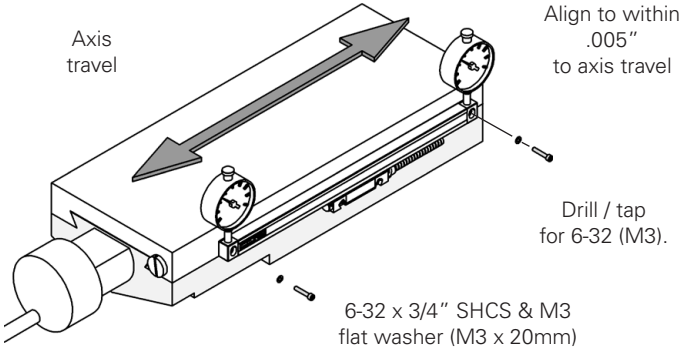

- Drill / tap the first end mounting hole / Attach the scale case.
- Align to within .005" TIR. and drill / tap second end hole.
- Attach scale case & align to within .005" TIR. of the axis travel.

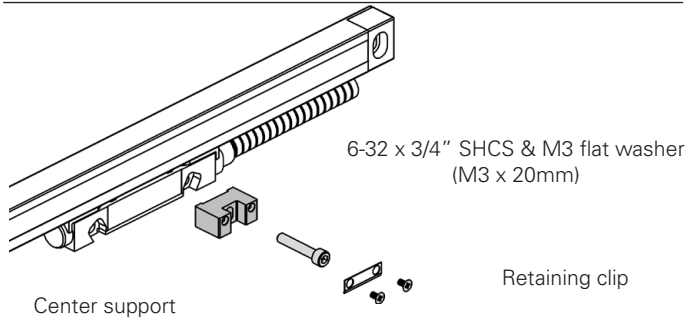

- Use center supports when provided.
- Place at uniform intervals along the scale case.

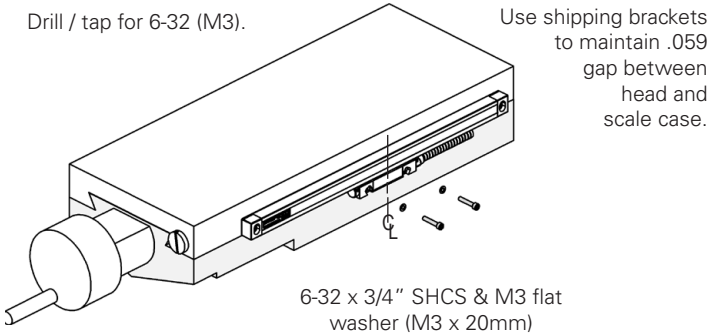

- Center the axis and mark the reading head mounting holes.
- Move the axis and drill / tap holes for 6-32 (M3).
- Attach head and align to scale case to within .005" TIR.

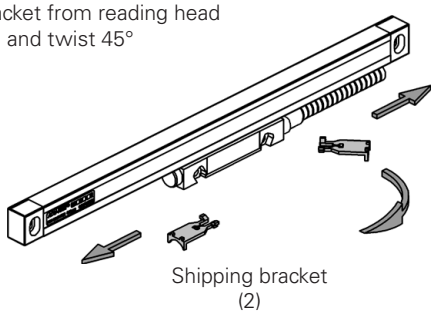

- Slide shipping brackets from reading head and twist to remove from the scale case.
- Save the shipping brackets with the Reference Manual.

Connecting

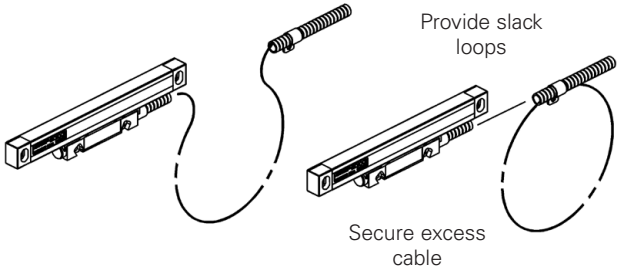

- Route the cables with slack loops to allow for axis motion.
- Secure excess cable by fastening with clips or ties.
- Attach the linear encoder connectors to the readout.

Counting Test

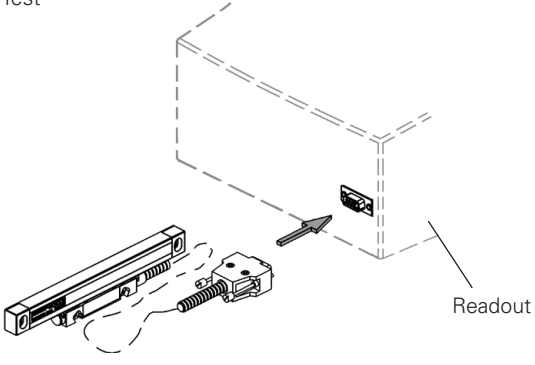

- Check function of the linear encoder.

These steps will confirm proper operation of your installation. Counting tests check channel A and B output function and Reference Mark tests check Reference Mark operation.

- Configure the readout for proper counting resolution.
- Move axis and compare the display to the movement.
- Repeat test for mechanical integrity and repeatability.
- Configure the readout for sensing reference mark.
- Move the reading head approximately 20mm.
- Locate an indicator on scale end and zero out axis and indicator.
- Move axis out and back over full travel and return to dial zero.
- Electronics should read zero ± 1 count.

Place indicator at end of moving component (scale case shown, or reading head).

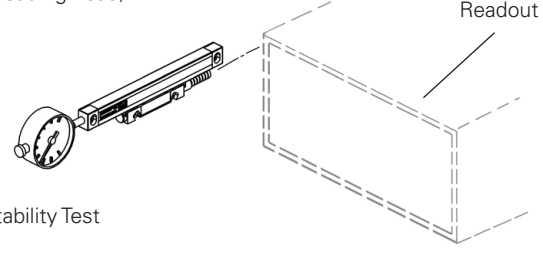

Repeatability Test

- Zero the display and indicator.
- Move axis to the end of it's travel, then return to dial zero.
- Readout should read zero ± 1 count.

Connect a ground wire from the terminal on the back of the readout to the machine or earth ground. Attach a ground wire from the machine to a solid earth ground.

With the encoder attached to the machine and the cable connected to the readout, check shielding by measuring resistance between connector housing and scale unit. Desired value: 1 Ω max.

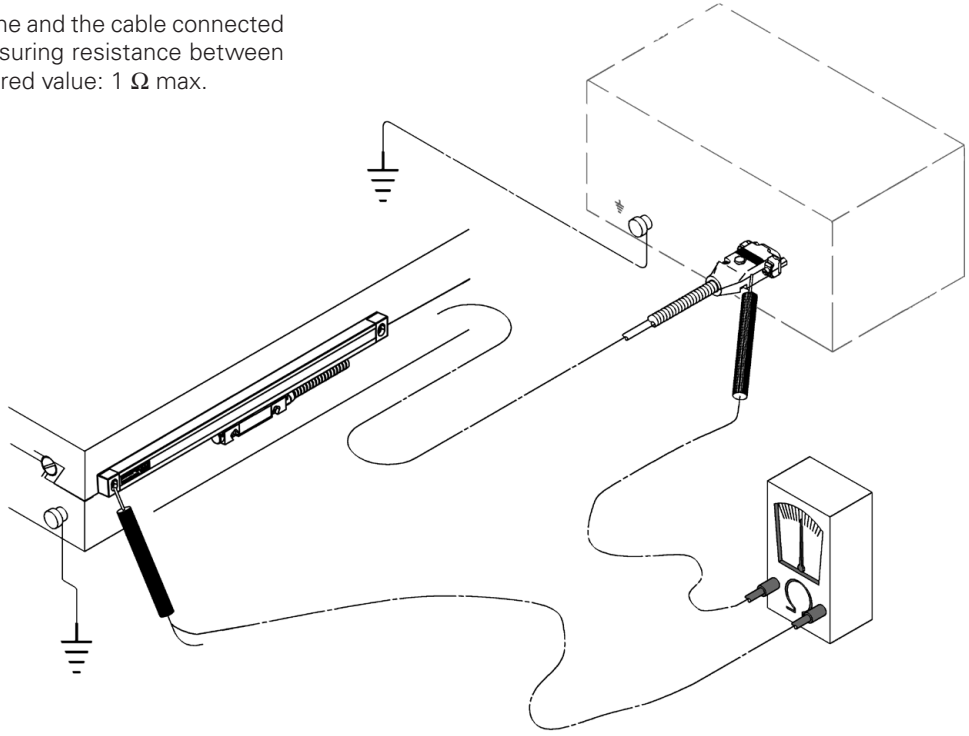

If you experience difficulties with your installation, there are methods to analyze the difficulty. Operating difficulties can be caused by either the linear encoders or the readout.

Checking the readout

Follow the steps below to determine if your difficulties are associated with the readout:

- Insure that the linear encoder connectors are correctly seated.
- Swap linear encoder cables at the readout to see if the problem is still shown in the same display.
- If the problem remains in the same display, the readout is in error.
- If the problem follows the connection change, the linear encoder may be in error.
- Follow this procedure for any intermittent problem experienced.

If the readout is at fault, refer to "What to do" to arrange for the parts necessary to repair your system. If the linear encoders appear to be the cause, perform the next step.

Checking the Linear Encoders

Linear encoder difficulties can be caused by improper installation, loose or misaligned bracketry, or a damaged / failed linear encoder.

Follow the steps below to determine the cause of your system difficulties:

- Confirm that your brackets, and installation does not interfere with other machine structures through the length of the linear encoder travel.
- Check for loose fasteners. If you find loose fasteners, first confirm that the linear encoder is installed to the tolerances specified and then retighten the fasteners as required.
- Confirm that the linear encoder is installed to the required tolerances by checking the alignment tolerances specified on Page 3 "Key Points". If the installation does not meet the tolerances, reinstall the linear encoder according to the procedures in "Installation".
- Perform a Repeatability Test as described on Page 10, "Checking Your Installation". If the linear encoder is installed to the required tolerances, the bracketry and linear encoder have been checked for interferences and loose fasteners, and the linear encoder fails the repeatability test, the linear encoder is likely at fault.

Do not attempt to repair the linear encoder. The units are only serviceable by assembly replacement. Attempted repair can permanently damage the unit and void the warranty.

What to do

If an ***ACU-RITE***® linear encoder or readout is found to be at fault, prior to removing the linear encoders or readout contact your Authorized Distributor or OEM/OEI for repair instructions.

Mechanical Specifications	Digital			Analog
Resolution	0.5µm	1µm	5µm	
Grating pitch	20µm			
Scale medium	Light transmission reflective off of chrome coated glass			
Accuracy (@ 20° C) / 1000mm	± 3µm, ± 5µm			
Max. slew speed (M/s)	1			
Force required to move reading head	≤ 0.5 (lbs)			
Operating Environment Temperature Relative Humidity	0° to 50° C 20% to 95% (non-condensing)			
Storage Environment Temperature Humidity	- 20° to 70° C 20% to 95% (non-condensing)			
Weight	1.1 + 0.2 lbs/ft of measuring length [64g + 5.6g/in.]			
Connecting cable armored or vinyl	Length = 5, 13, and 19 ft. Connector: DE-9P			Length = 5, 13, and 19 ft. Connector: DE-9P
Max. cable length (ft)	20		26	75
Measuring lengths	1" - 20"			
Reference pulse interval	50mm fixed or Position Trac			
Repeatability	Within one resolution count			
Operating current (ma)	220		180	75
Protection (IEC 529)	IP 53 when installed as per instruction			

Digital Differential

Pin 1	Pin 2	Pin 3	Pin 4	Pin 5	Pin 6	Pin 7	Pin 8	Pin 9
N/C	Green	Yellow	Pink	Red	White	Black	Gray	Brown
N/C	Channel A+	Channel A-	Channel B+	Channel B-	Ground	Vcc, + 5.1 ± 0.1 VDC	Channel R+	Channel R-

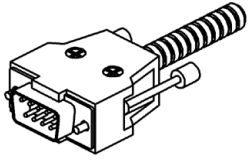

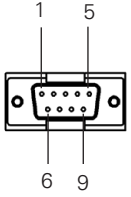

Analog Differential

Pin 1	Pin 2	Pin 3	Pin 4	Pin 5	Pin 6	Pin 7	Pin 8	Pin 9
White w/Grn Stripe & Brown	Green	Yellow	Orange	Red	N/C	Black	Blue	Violet
Ground	Channel A+	Channel A-	Channel B+	Channel B-	N/C	Vcc, + 5.0 ± 0.1 VDC	Channel R+	Channel R-

Parameter	Digital	Analog
Output Signals	I_{OH}=(High level output current) = 20mA V_{OH}=(High level output voltage) >2.5Vdc 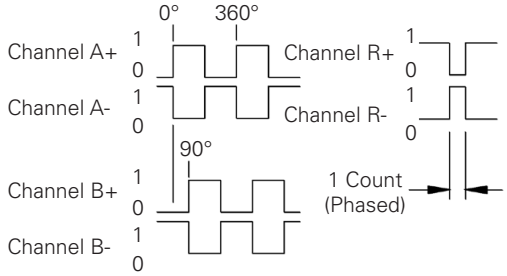 I_{OL}=(Low level output current) = -20mA V_{OL}=(Low level output voltage) < 0.6Vdc	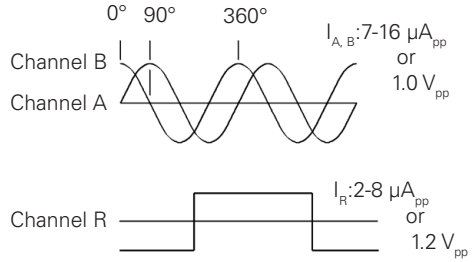
Incremental signals Signal levels	Square-wave voltage signals. Channels A and B, in 90° quadrature relationship TTL-level	Similar phasing, but differential sinusoidal current or 1 volt peak to peak output 7-16μA_{pp} or 1.0 V_{pp} w/1 K Ohm load
Reference Mark signals Signal level	Square-wave signal TTL-level	Differential current or 1 volt peak to peak output 2-8μA_{pp} or 1.2 V_{pp} w/100 K Ohm load
Power Supply	5.1 ± 0.1 VDC @ 220 mA max.	5.0 ± 0.1VDC @ 75 mA max.

For Warranty information, go to www.acu-rite.com.

HEIDENHAIN

DR. JOHANNES HEIDENHAIN GmbH
Dr.-Johannes-Heidenhain-Straße 5
83301 Traunreut, Germany
☏ +49 (8669) 31-0
FAX +49 (8669) 5061
e-mail: info@heidenhain.de

Technical support FAX +49 (8669) 31-1000
e-mail: service@heidenhain.de
Measuring systems ☏ +49 (8669) 31-3104
e-mail: service.ms-support@heidenhain.de
TNC support ☏ +49 (8669) 31-3101
e-mail: service.nc-support@heidenhain.de
NC programming ☏ +49 (8669) 31-3103
e-mail: service.nc-pgm@heidenhain.de
PLC programming ☏ +49 (8669) 31-3102
e-mail: service.plc@heidenhain.de
Lathe controls ☏ +49 (711) 952803-0
e-mail: service.hsf@heidenhain.de

www.heidenhain.de

HEIDENHAIN CORPORATION

333 East State Parkway
Schaumburg, IL 60173-5337 USA
☏ +1 (847) 490-1191
FAX +1 (847) 490-3931
E-Mail: info@heidenhain.com

www.heidenhain.com

ACU-RITE®

ISO 9001
CERTIFIED

CE

516353-22 Ver 00

• Subject to change without notice •

10/2009

AMI
Automation and Metrology
1-888-354-2525
auto-met.com