SENC 150 and SENC 50

Encoder Installation Manual For:
Longitudinal Z Axis & Cross Feed X Axis
to the Clausing 1330 & 1440 Lathes

Longitudinal Installation ...

** Supplied with Encoder hardware*

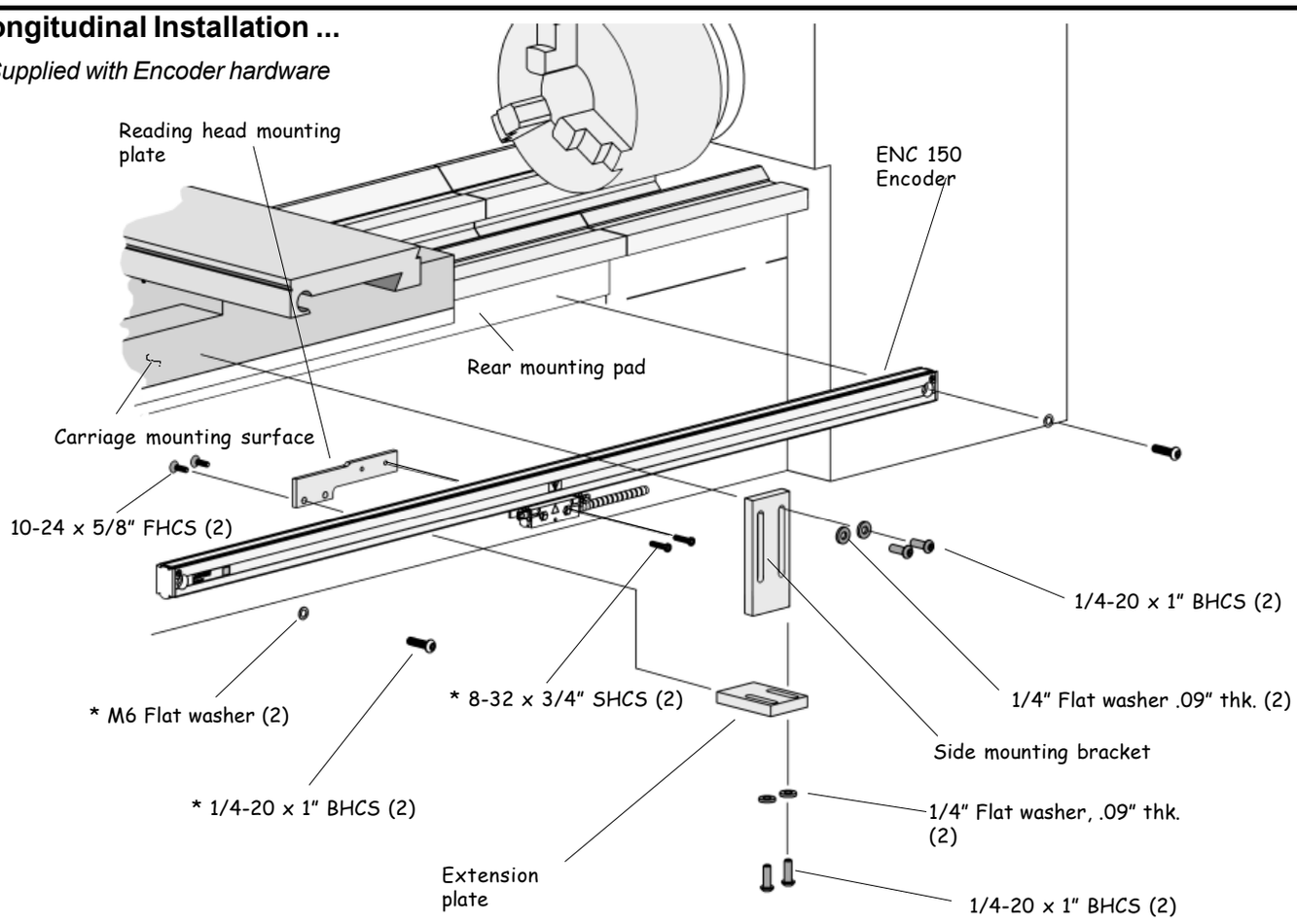

Mounting Information...

These are application instructions for mounting the longitudinal "Z" axis SENC 150 encoder, and the Cross feed "X" axis SENC 50 encoder.

Before proceeding:

- ➤ Please read the instructions completely.
- ➤ Mount Z axis prior to installing the cross feed.
- ➤ Insure that the correct length encoder is being used for the total axis travel.
- ➤ Keep the reading head centered during installation.
- ➤ Clean the mounting surfaces.
- ➤ Save the alignment brackets with the Encoder Reference Manual after installation is completed.

First Steps ...

Machine

- ✔ Move the carriage to its center of travel.
- ✔ Mark the axis so that it can be re-centered easily.

Encoder

- ✔ Unpack encoder in a safe, convenient location.
- ✔ Do not remove the reading head alignment brackets until instructed.

Center reading head ...

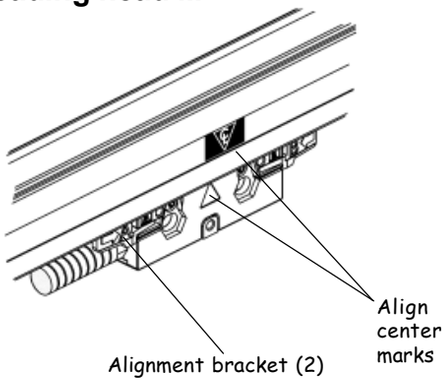

- Slide the reading head and brackets along the scale case until the center marks on the scale case and reading head are aligned.

AMI
Automation and Metrology
8808 Tyler Blvd, Mentor, OH 44060
1-888-354-2525 | sales@auto-met.com
Request a quote: auto-met.com

Encoder orientation ...

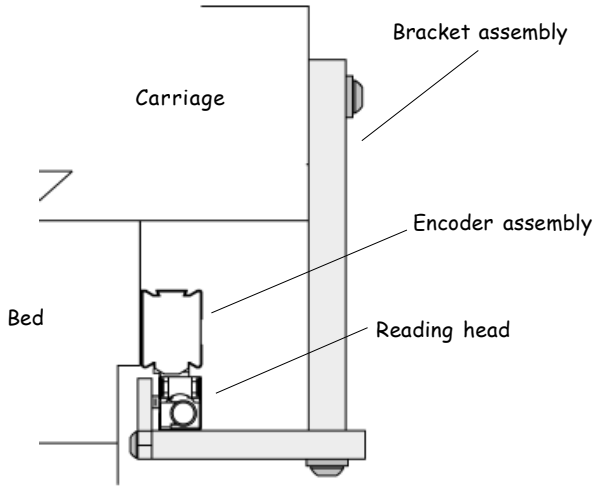

- These instructions will guide you through installing the encoder as shown in this view.

Cable exit ...

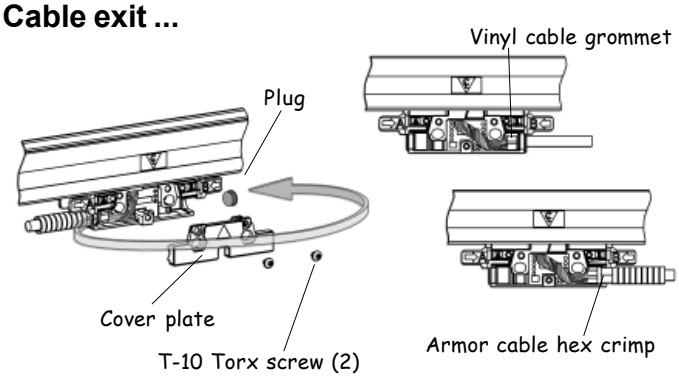

- Determine the cable exit direction before installing the encoder.
- To change the cable exit direction, remove the cover plate and rotate the cable 180°.

Bracket assembly ...

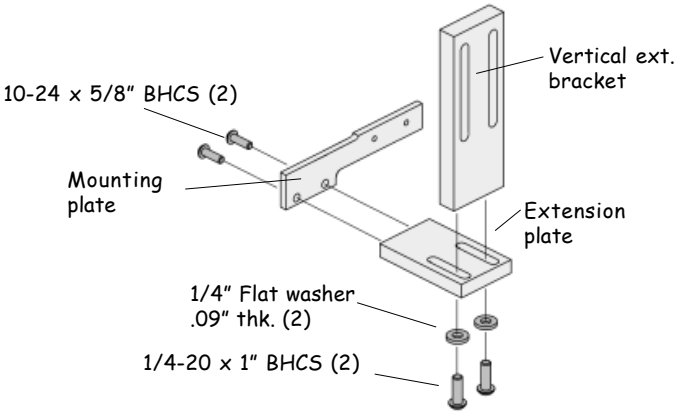

- Assemble the brackets, fully extending the extension plate.

Bracket attachment ...

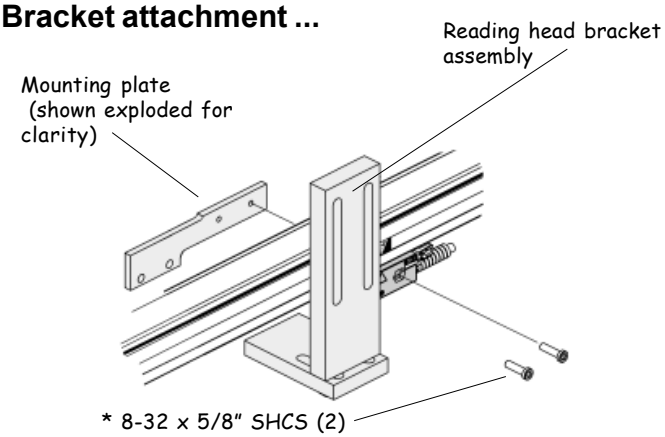

- Temporarily attach the bracket assembly to the reading head for locating purposes.

Encoder installation ...

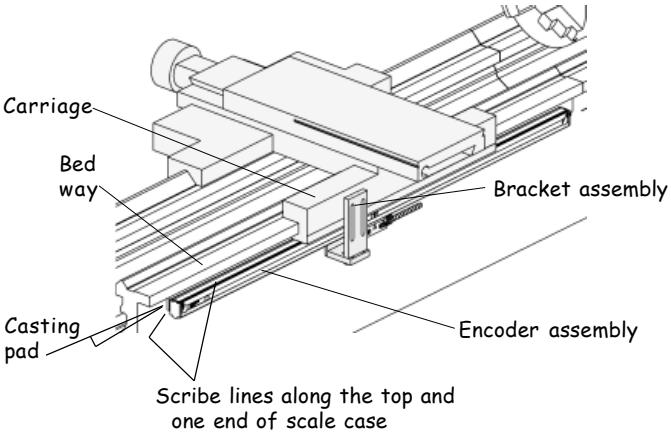

- With the carriage at its center of travel, position the encoder to the side of the bed on the casting pad and the bracket assembly to the rear of the carriage.
- Position the encoder and bracket assembly so that the mounting surfaces provide proper clearances that will not interfere with normal machine operation.
- With spar parallel to the bed ways, scribe encoder reference lines on the bed. Remove the assembly.

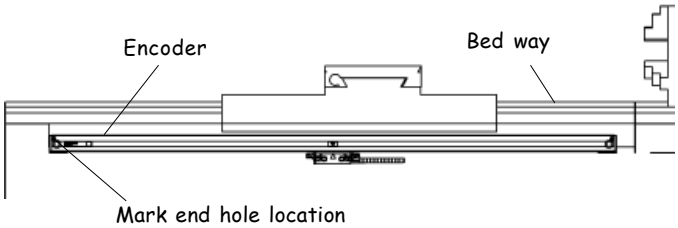

- Remove the bracket assembly from the reading head.
- Position the encoder to the scribed lines and mark one end mounting hole location to the bed.
- Remove encoder, drill and tap hole location for a 1/4-20 x 1/2" deep.

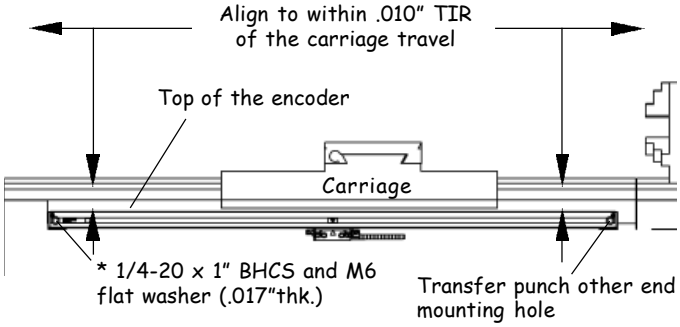

- Fasten the encoder to the bed.
- Align the top of the encoder to the carriage travel to within .010" TIR measuring over scale case end mounting hole locations.
- Transfer punch the other end mounting hole.
- Remove encoder, drill and tap location for a 1/4-20 x 1/2" deep.

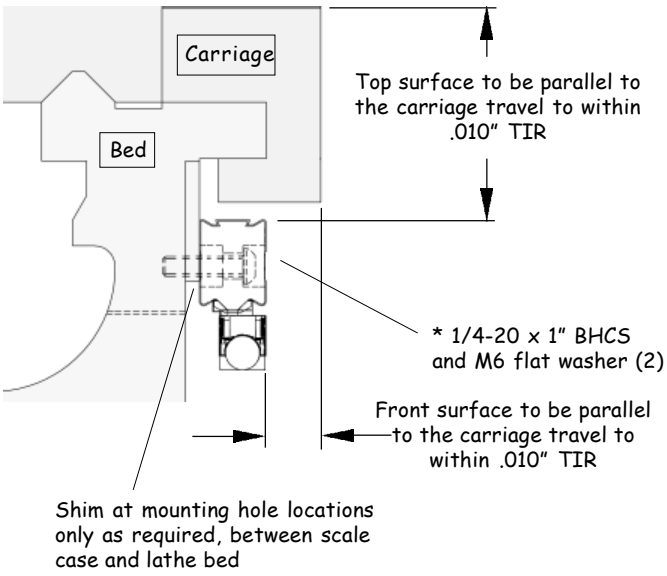

- Attach the encoder to the bed.
- Align the front surface of the encoder to within .010" TIR of the carriage travel (use shim stock if necessary).
- Align the top surface of the encoder to within .010" TIR to the carriage travel and secure encoder in place.

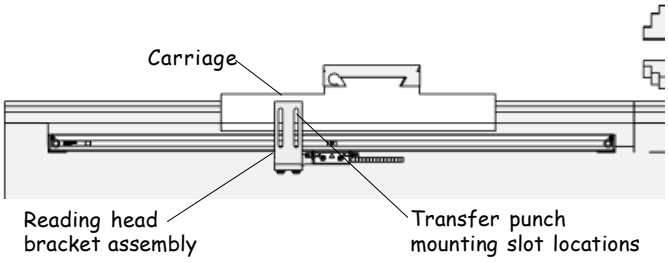

- Move the carriage to its center of travel. Attach the bracket assembly to the reading head.
- Position the assembly to the carriage, and transfer punch the two mounting slot locations to the back side of the carriage.
- Remove the assembly, drill and tap the locations for 1/4-20 x 1/2" deep.

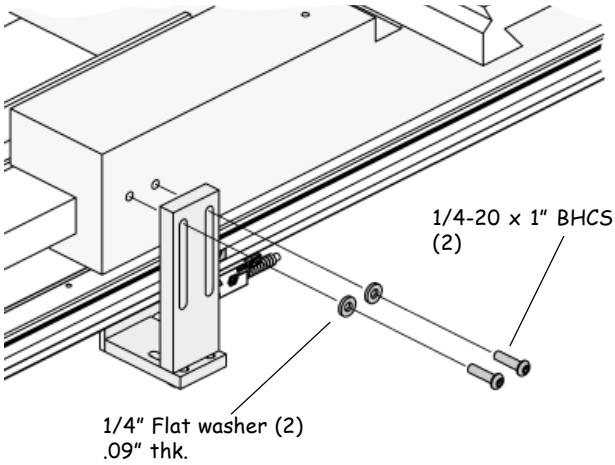

- Attach the bracket assembly to the carriage.

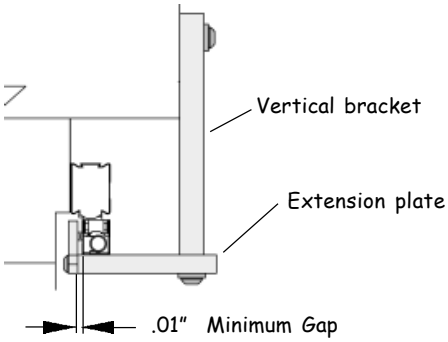

- Adjust the extension plate so that a min. gap of .01" clearance exist between the reading head and bracket.
- It is important to ensure that the back side of the reading head plate and screw do not contact the bed through its full travel.
- Align the bracket and head mounting holes.
- Secure bracket assembly in place.

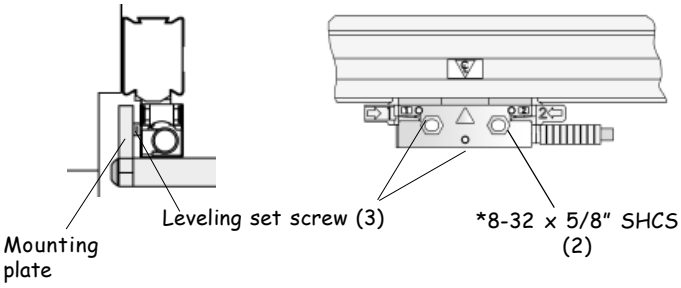

- Set each leveling screw by placing a .001 - .003" feeler gage between the screw and reading head mounting plate.
- Adjust each screw until a slight drag is felt on the feeler gage.
- **Evenly tighten** the two *8-32 SHCS.

Encoder button up ...

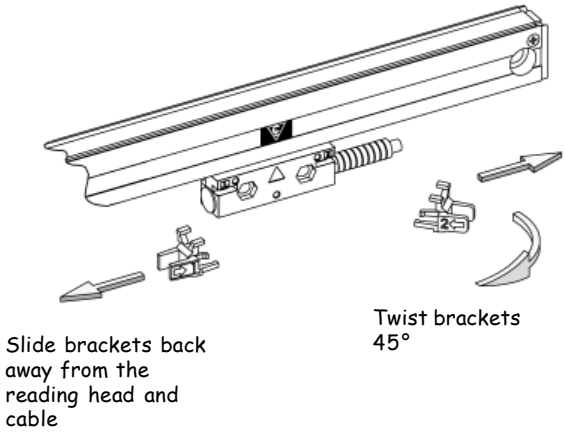

- Use allen wrench from set screw adjustment to slide alignment brackets away from the reading head.
- Remove alignment brackets and save for possible future use.
- Move the axis through its full travel. Confirm that the assembly does not interfere with the machine movement.

Proceed with the Cross Feed installation

Cross Feed Installation ...

** Supplied with Encoder hardware*

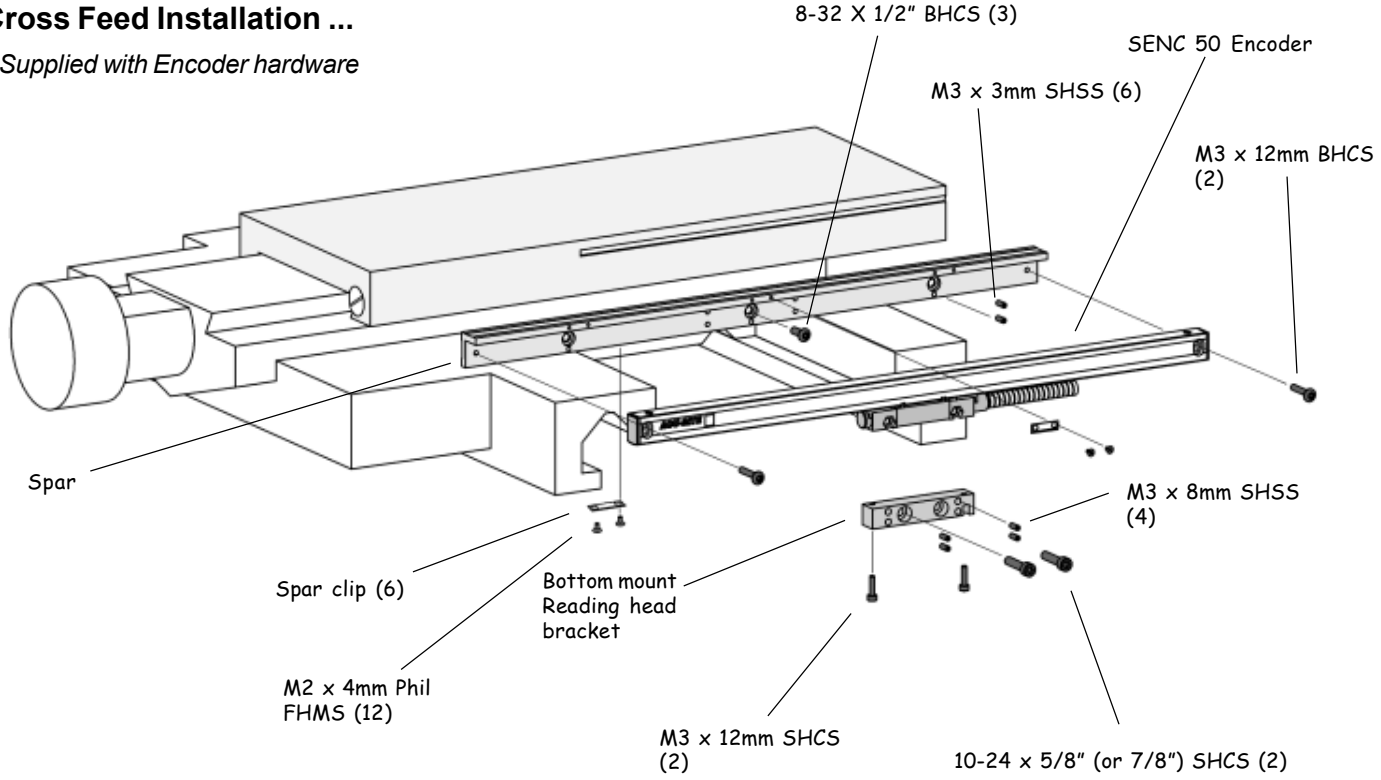

Mounting Information...

These are application instructions for mounting the Cross feed "X" axis SENC 50 encoder.

Before proceeding:

- ➤ Please read the instructions completely.
- ➤ Mount Z axis prior to installing the cross feed.
- ➤ Insure that the correct length encoder is being used for the total axis travel.
- ➤ Keep the reading head centered during installation.
- ➤ Clean the mounting surfaces.
- ➤ Save the alignment brackets with the Encoder Reference Manual after installation is completed.

First Steps ...

Machine

- ✔ Move the cross feed to its center of travel.
- ✔ Mark the axis so that it can be re-centered easily.

Encoder

- ✔ Unpack encoder in a safe, convenient location.
- ✔ Do not remove the reading head shipping brackets until instructed.

Center reading head ...

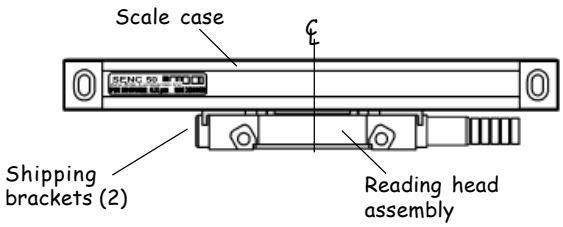

- Center the reading head on the scale case by sliding the reading head and brackets along the scale case to the center of the scale case.

Cable exit ...

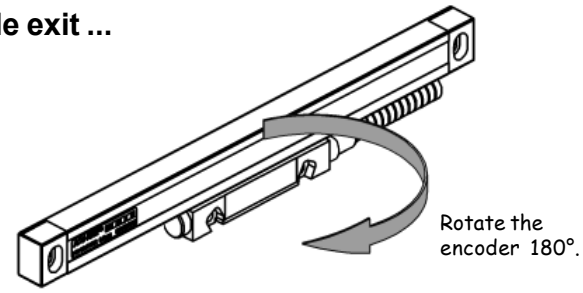

- Determine the cable exit direction before installing the encoder.
- To change the cable exit direction, rotate the encoder 180°. Encoder can be mounted on either side.

Spar installation ...

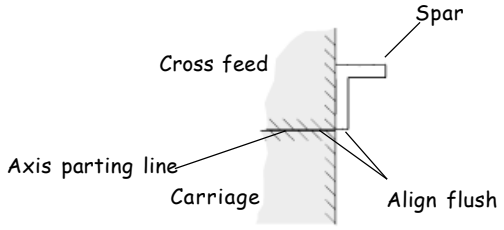

- **With the cross feed at it's center of travel,** hold the spar to the side of the cross feed, and position the bottom edge flush to the axis parting line.

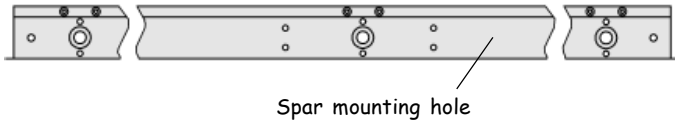

- Locate one end mounting hole to the carriage and remove the spar.
- Drill and tap the hole location for an 8-32 x 1/2" deep.

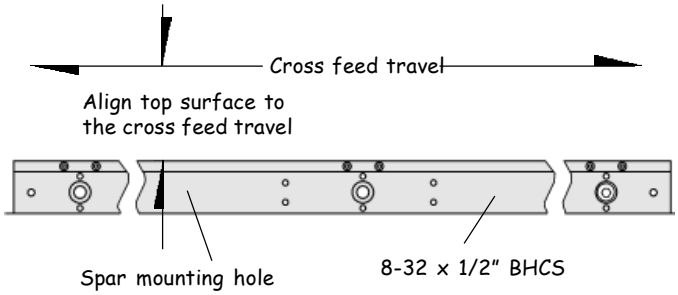

- Fasten the spar to the cross feed.
- Align the top surface of the spar to within .005" TIR of the cross feed travel.
- Transfer punch the remaining mounting holes and remove the spar.
- Drill and tap hole locations for an 8-32 x 1/2" deep.

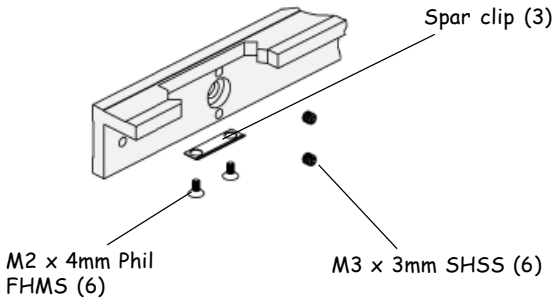

- Install two M3 x 3mm SHSS at each mounting hole location, and set flush with the back surface of the spar.
- Attach the spar clips to the lower leg of the spar only.

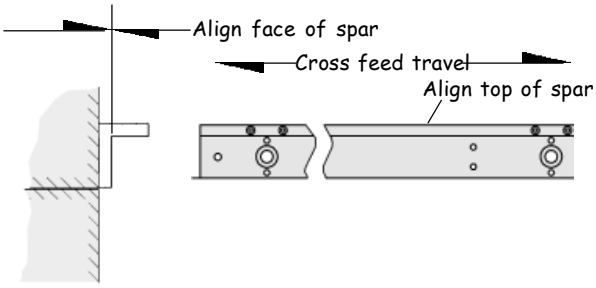

- Attach the spar to the carriage with the 8-32 x 1/2" BHCS.
- Align the face of the spar to the cross feed travel to within .005" TIR. Use the M3 spar set screws to aid with this alignment if required.
- Align the top of the spar to within .005" TIR to the cross feed travel. Secure spar in place maintaining both alignments.

Attach Bracket

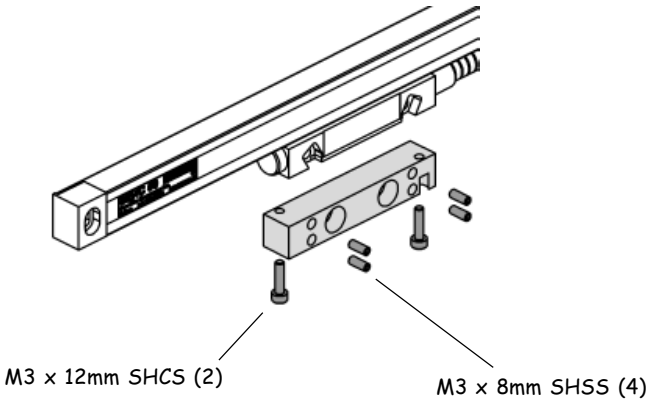

- Insert the four M3 x 8mm SHSS into the bracket and set flush with the back side surface.
- Attach the bracket to the underside of the reading head but do not tighten.

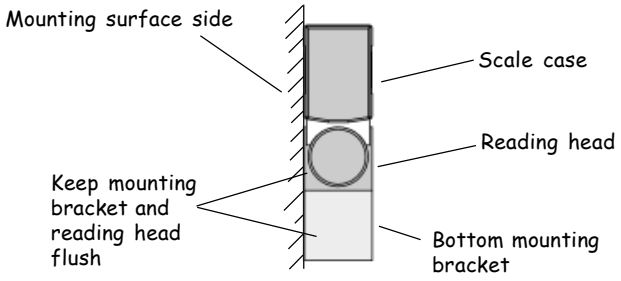

- Align the mounting surface side of the bracket flush with the reading head surface. Tighten bracket in place.

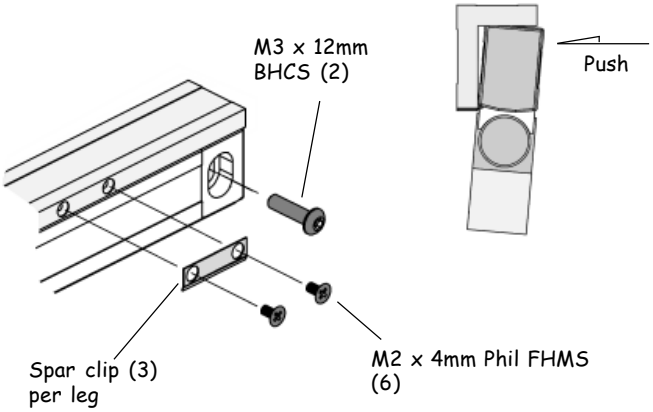

- Place the lower back edge of the scale case onto the bottom spar clips. Push on the front upper edge of the encoder to seat the scale case in the spar.
- Attach the front spar clips and secure in place.
- Attach both ends of the scale case to the spar using the M3 x 12mm BHCS.

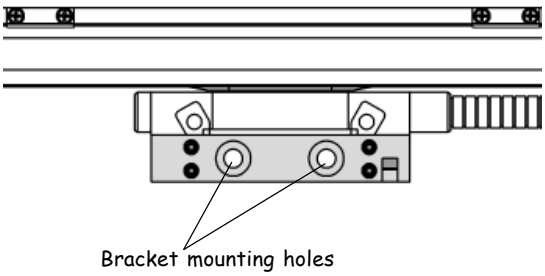

- With the reading head and cross feed at its center of travel, transfer punch the two bracket mounting holes to the carriage.
- Move the cross feed to expose the hole locations. Drill and tap locations for a 10-24 x 1/2" deep.

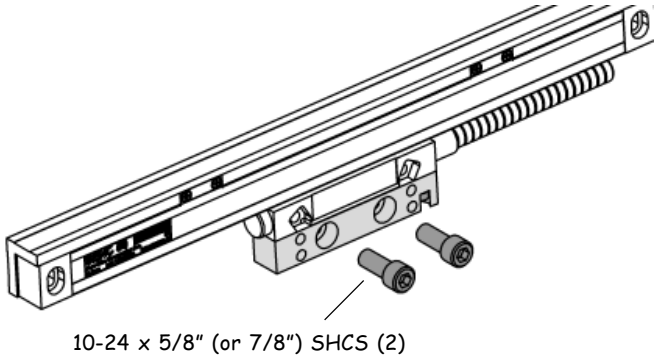

- Move the cross feed back to align the bracket with the mounting holes and lock the cross feed in place.
- Attach the bracket to the machine but **do not** tighten the fasteners.

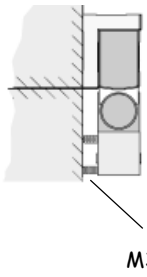

- Adjust the leveling screws by placing a .0015" -.003" feeler gage between each leveling screw and the machine base. Tighten each leveling screw until a slight drag is felt on the gage.
- Fully tighten the 10-24 x 5/8" (or 7/8") SHCS.

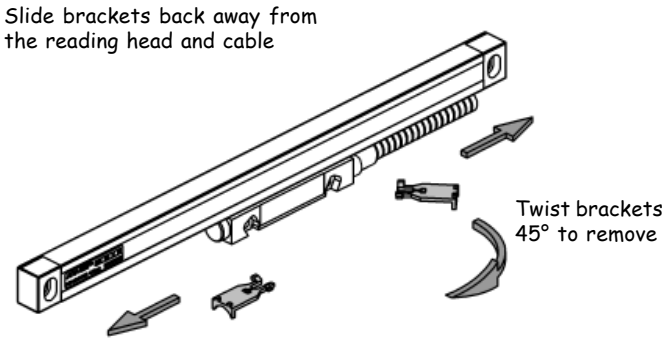

- Support the reading head while sliding the shipping brackets away from the reading head. Gently twist to remove them from the scale case.
- Save the shipping brackets with the Encoder Reference Manual.

Encoder button up ...

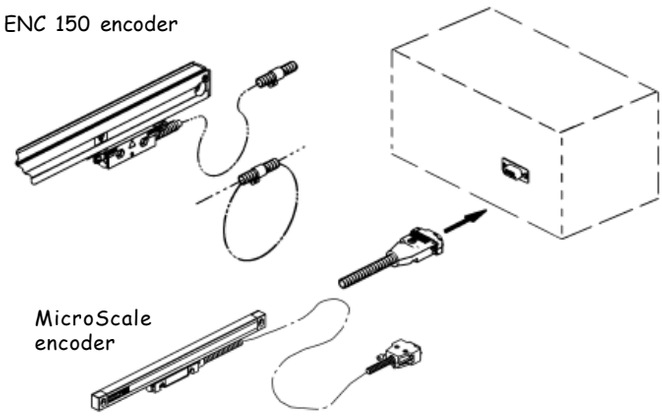

- With the longitudinal axis installation complete, route the cables providing sufficient slack loops for machine movement to the readout.
- Secure cables by fastening with clips or ties.
- Attach the encoder connectors to the readout.
- Complete the installation by folowing the steps in “Checking Your Installation” section in the encoder “Reference Manual”.

AMI
Automation and
Metrology
1-888-354-2525
auto-met.com