ECN/EQN/ERN 400 series

Absolute and incremental rotary encoders
- **Stator coupling for plane surface**
- **Blind hollow shaft or hollow through shaft**

Blind hollow shaft

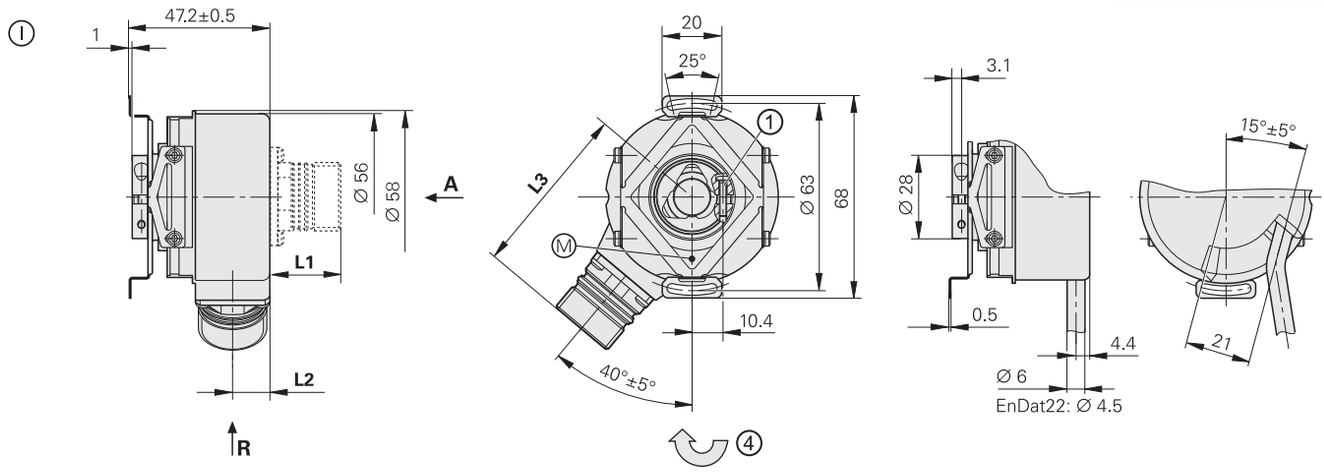

Hollow through shaft

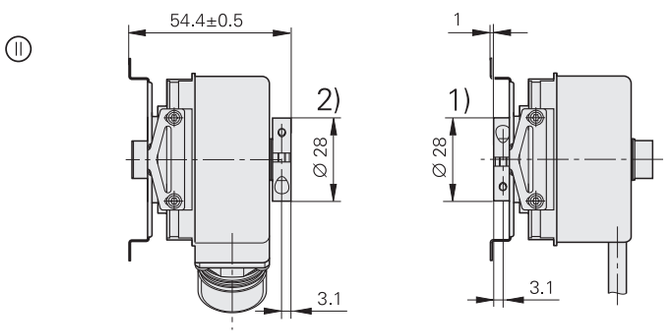

Connector coding
A = Axial, **R** = Radial

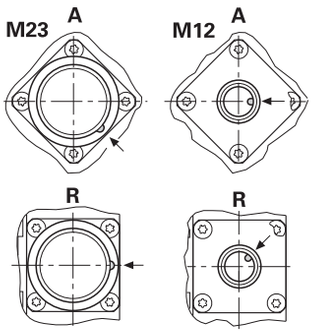

	Flange socket	
	M12	**M23**
L1	14	23.6
L2	12.5	12.5
L3	48.5	58.1

D
Ø 8g7 Ⓔ
Ø 12g7 Ⓔ

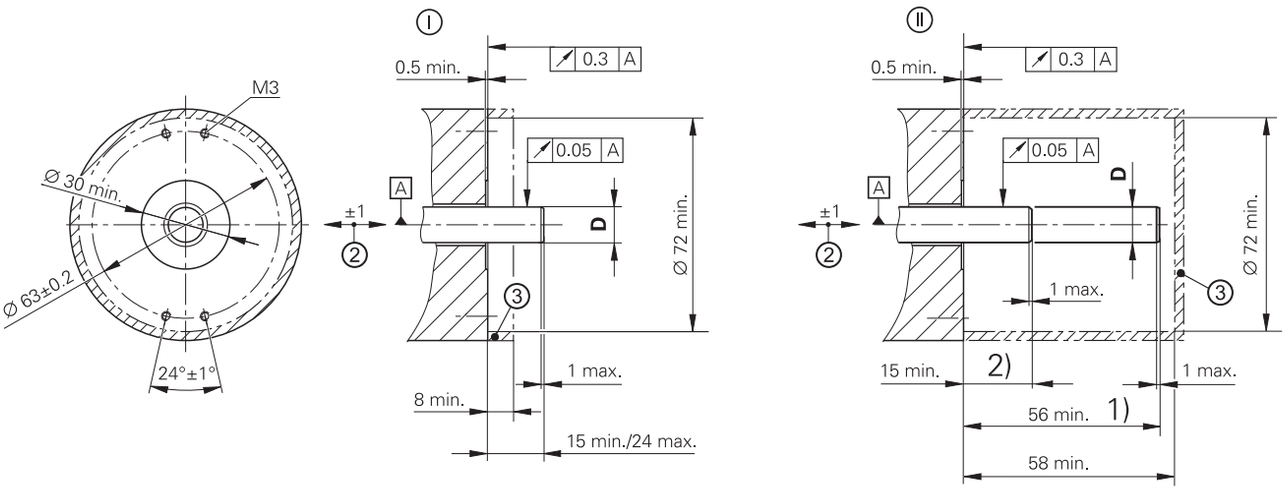

mm
Tolerancing ISO 8015
ISO 2768:1989-mH
≤ 6 mm: ±0.2 mm

Radial cable (can also be used axially)
Ⓐ = Bearing of mating shaft
Ⓜ = Measuring point for operating temperature
1 = Clamping screw with X8 hexalobular socket
2 = Compensation of mounting tolerances and thermal expansion; no dynamic motion permitted
3 = Ensure protection against contact (EN 60529)
4 = Incremental rotary encoders: direction of shaft rotation for output signals as per interface description
Absolute rotary encoders: direction of shaft rotation for ascending position values
1) = Clamping ring on housing side (delivery condition)
2) = Clamping ring on coupling side (optionally mountable)

AMI
Automation and Metrology
8808 Tyler Blvd, Mentor, OH 44060
1-888-354-2525 | sales@auto-met.com
Request a quote: auto-met.com

	Absolute **Singleturn** **ECN 425** Functional Safety	**ECN 413**	
Interface*	EnDat 2.2	EnDat 2.2	SSI
Ordering designation	EnDat22	EnDat01	SSI39r1
Positions/revolution	33 554 432 (25 bits)	8192 (13 bits)	
Revolutions	–		
Code	Pure binary		Gray
Elec. permissible speed Deviations[1]	≤ 12 000 rpm for continuous position value	512 lines: ≤ 5000/12 000 rpm ±1 LSB/±100 LSB 2048 lines: ≤ 1500/12 000 rpm ±1 LSB/±50 LSB	≤ 12 000 rpm ±12 LSB
Calculation time t_{cal} Clock frequency	≤ 7 µs ≤ 8 MHz	≤ 9 µs ≤ 2 MHz	≤ 5 µs –
Incremental signals	Without	∿ 1 V_{PP}[2]	
Line counts*	–	**512** 2048	512
Cutoff frequency –3 dB Output frequency	– –	512 lines: ≥ 130 kHz; 2048 lines: ≥ 400 kHz –	
System accuracy	±20″	512 lines: ±60″; 2048 lines: ±20″	
Electrical connection*	• **M12 flange socket**, radial • Cable (1 m) with M12 coupling	• **M23 flange socket**, radial • Cable (1 m) with M23 coupling or without connecting element	
Supply voltage	DC 3.6 V to 14 V		DC 4.75 V to 30 V
Power consumption (maximum)	3.6 V: ≤ 0.6 W 14 V: ≤ 0.7 W		4.75 V: ≤ 0.6 W 30 V: ≤ 0.78 W
Current consumption (typical, without load)	5 V: 80 mA		5 V: 70 mA 24 V: 20 mA
Shaft*	**Blind hollow shaft** or **hollow through shaft** (both available in ∅ **8 mm** or ∅ **12 mm**)		
Mech. permiss. speed[3]	≤ 6000 rpm/≤ 12 000 rpm[4]		
Starting torque (typical) at 20 °C	Blind hollow shaft: 0.01 Nm (with IP66: 0.05 Nm) Hollow through shaft: 0.025 Nm (with IP66: 0.075 Nm)		
Moment of inertia of rotor	≤ 4.6 · 10^{-6} kgm^2		
Permiss. axial motion of measured shaft	±1 mm		
Vibration: 55 Hz to 2000 Hz **Shock:** 6 ms	≤ 300 m/s^2; flange socket version: ≤ 150 m/s^2 (EN 60068-2-6); higher values upon request ≤ 2000 m/s^2 (EN 60068-2-27)		
Max. operating temp.[3]	100 °C		
Min. operating temp.	Flange socket or fixed cable: –40 °C; moving cable: –10 °C		
Protection EN 60529	At housing: IP67 (IP66 with hollow through shaft) At shaft inlet: IP64 (with ∅ 12 mm: IP66 upon request)		
Mass	≈ 0.3 kg		
Valid for ID	1178024-xx[5]	1065932-xx	1353129-xx

Bold: This preferred version is available on short notice.
* Please select when ordering
1) Speed-dependent deviations between absolute value and incremental signal
2) Limited tolerances: signal amplitude: 0.8 V_{PP} to 1.2 V_{PP}

AMI
Automation and Metrology
1-888-354-2525
auto-met.com