ECN/EQN/ERN 400 series

Absolute and incremental rotary encoders
- **Stator coupling for plane surface**
- **Blind hollow shaft or hollow through shaft**

Blind hollow shaft

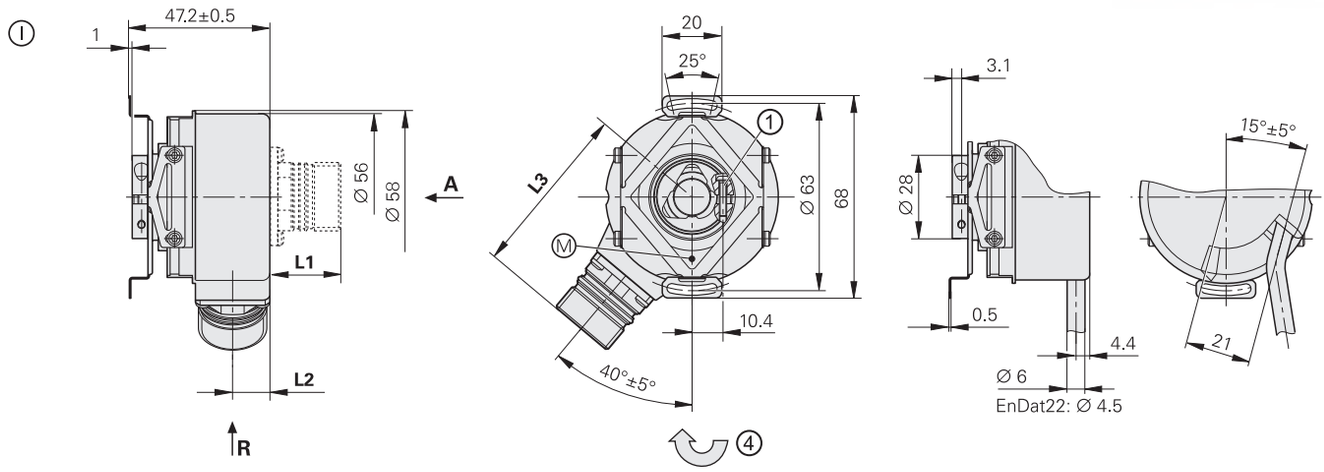

Hollow through shaft

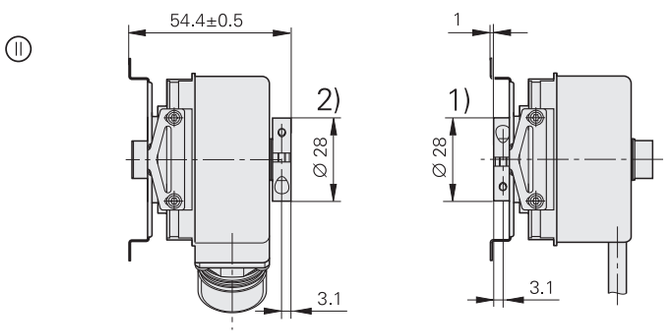

Connector coding
A = Axial, **R** = Radial

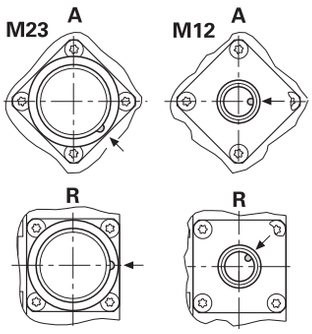

	Flange socket	
	M12	**M23**
L1	14	23.6
L2	12.5	12.5
L3	48.5	58.1

D
Ø 8g7 Ⓔ
Ø 12g7 Ⓔ

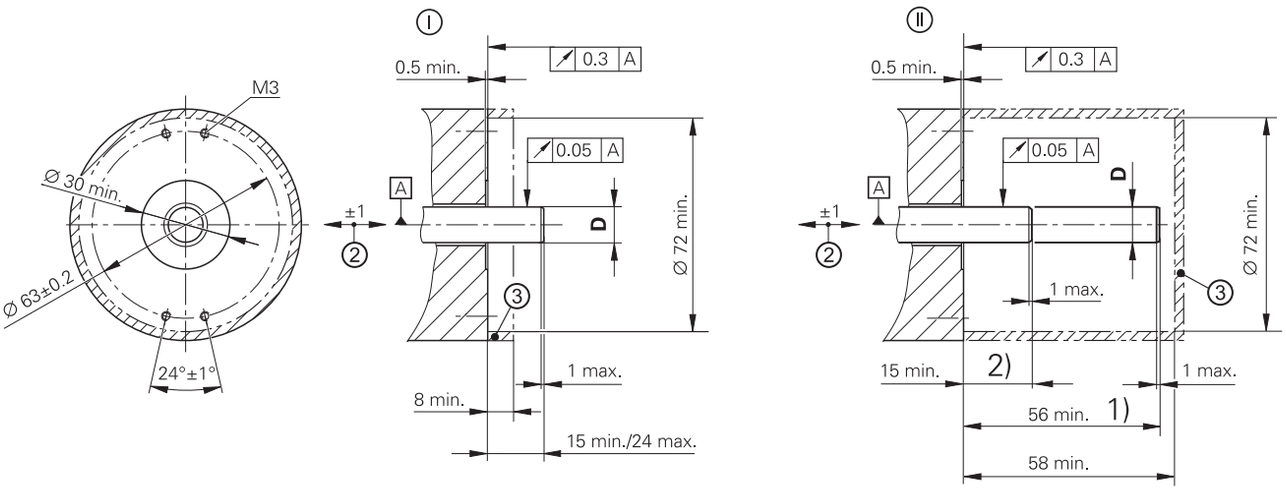

mm
Tolerancing ISO 8015
ISO 2768:1989-mH
≤ 6 mm: ±0.2 mm

Radial cable (can also be used axially)
Ⓐ = Bearing of mating shaft
Ⓜ = Measuring point for operating temperature
1 = Clamping screw with X8 hexalobular socket
2 = Compensation of mounting tolerances and thermal expansion; no dynamic motion permitted
3 = Ensure protection against contact (EN 60529)
4 = Incremental rotary encoders: direction of shaft rotation for output signals as per interface description
Absolute rotary encoders: direction of shaft rotation for ascending position values
1) = Clamping ring on housing side (delivery condition)
2) = Clamping ring on coupling side (optionally mountable)

AMI
Automation and Metrology
8808 Tyler Blvd, Mentor, OH 44060
1-888-354-2525 | sales@auto-met.com
Request a quote: auto-met.com

	Multiturn EQN 437 Functional Safety	EQN 425	
	EnDat 2.2	EnDat 2.2	SSI
	EnDat22	EnDat01	SSI41r1
	33 554 432 (25 bits)	8192 (13 bits)	
	4096		
	Pure binary		Gray
	≤ 12 000 rpm for continuous position value	512 lines: ≤ 5000/10 000 rpm ±1 LSB/±100 LSB 2048 lines: ≤ 1500/10 000 rpm ±1 LSB/±50 LSB	≤ 12 000 rpm ±12 LSB
	≤ 7 µs ≤ 8 MHz	≤ 9 µs ≤ 2 MHz	≤ 5 µs –
	Without	∿ 1 V_{PP}[2]	
	–	**512** 2048	512
	– –	512 lines: ≥ 130 kHz; 2048 lines: ≥ 400 kHz –	
	±20″	512 lines: ±60″; 2048 lines: ±20″	
	• **M12 flange socket**, radial • Cable (1 m) with M12 coupling	• **M23 flange socket**, radial • Cable (1 m) with M23 coupling or without connecting element	
	DC 3.6 V to 14 V	DC 3.6 V to 14 V	DC 4.75 V to 30 V
	3.6 V: ≤ 0.7 W 14 V: ≤ 0.8 W		4.75 V: ≤ 0.68 W 30 V: ≤ 0.88 W
	5 V: 95 mA		5 V: 85 mA 24 V: 20 mA
	1178025-xx[5]	1109258-xx	1353131-xx

[3] For the relationship of operating temperature to shaft speed and supply voltage, see "General mechanical information"
[4] With two shaft clampings (only with hollow through shaft)
[5] Also available with functional safety; for dimensions and specifications, see Product Information document

AMI
Automation and Metrology
1-888-354-2525
auto-met.com