HEIDENHAIN

Product Information

EXE 600 Series

Interpolation and
Digitizing Electronics

October 2006

Automation and Metrology International, LLC
8808 Tyler Blvd, Mentor, OH 44060

1-888-354-2525 | sales@auto-met.com
Request a quote: auto-met.com

EXE 600 Series

Interpolation and Digitizing Electronics
- **Input signals ∿ 11 µA$_{PP}$**
- **Output signals ⊓⊔ TTL**

Tolerancing ISO 8015
ISO 2768 - m H
< 6 mm: ±0.2 mm

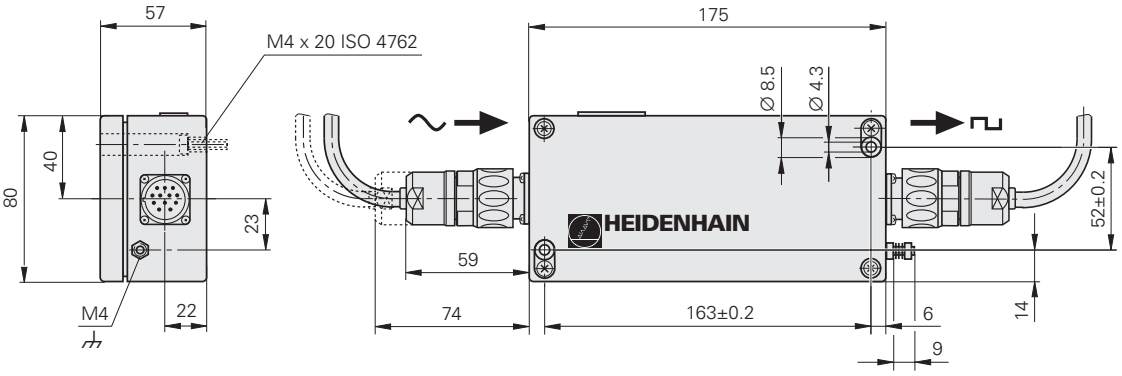

Specifications		EXE 602 E		EXE 660 B			
Input		∿ 11 μA_{PP}					
Electrical Connection		M23 flange socket (female) 9-pin					
Cable length		≤ 30 m for $I_{Encoder}$ ≤ 120 mA					
Interpolation[1]		**Without, 5-fold**		25-fold, 50-fold, 100-fold, 200-fold, **400-fold**			
Input frequency[1] for interpolation		Nominal values[2]					
	Without	50 kHz		–			
	5-fold	25 kHz		–			
	25-fold	–		50 kHz	50 kHz	25 kHz	12.5 kHz
	50-fold	–		50 kHz	25 kHz	12.5 kHz	6.25 kHz
	100-fold	–		25 kHz	12.5 kHz	6.25 kHz	3.12 kHz
	200-fold	–		12.5 kHz	6.25 kHz	3.12 kHz	1.56 kHz
	400-fold	–		**6.25 kHz**	3.12 kHz	1.56 kHz	0.78 kHz
Output		⊓⊔TTL (unclocked)		⊓⊔TTL (clocked)			
Electrical connection		M23 flange socket (male) 12-pin					
Cable length		≤ 100 m ($\overline{U_{aS}}$ ≤ 50 m)					
Edge separation a		≥ 2.500 µs	≥ 0.500 µs	≥ 0.075 µs	≥ 0.175 µs	≥ 0.370 µs	≥ 0.760 µs
Reference mark signal[1]		Pulse width **90° elec.** or ungated (only when *without interpolation*) or 270° elec.					
Fault indication[1]		through **fault detection signal $\overline{U_{aS}}$** or, in addition, U_{a1}/U_{a2} high impedance					
Power supply		5 V ± 5%					
Current consumption[3]		≤ 90 mA		≤ 120 mA			
Operating temperature **Storage temperature**		0 °C to 70 °C –30 °C to 80 °C					
Vibration 50 to 2000 Hz **Shock** 11 ms		≤ 10 m/s^2 ≤ 300 m/s^2					
Protection		IP 65					
Weight		0.7 kg					

Bold: These preferred versions are available on short notice
[1] Adjustable
[2] The actual input frequency can be up to 5 % lower. Exceeding this limit results in failure
[3] Not including the current consumption of the encoder (see the corresponding brochure) and without output load (80 mA with recommended input circuitry)

Electrical Connection

Connecting cable or adapter cable with M23 connector (male) 9-pin **Cable** and **connector** 9-pin See HEIDENHAIN catalogs for digital readout and length gauges as well as product Information sheets for the respective encoders			**M23 connecting cable** 12-pin, Ø 8 mm
			Complete Id. Nr. 298399-xx
			With one connector Id. Nr. 309777-xx
			Cable only [4(2x0.14mm^2) + (4x0.5 mm^2)] Id. Nr 244957-01
			Connector (female) 12-pin Id. Nr. 291697-05

EXE input – ∿ 11 µA$_{PP}$

9-pin
Flange socket
M23

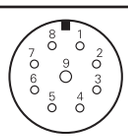

	Power supply				Incremental signals					
	3	**4**	**Housing**	**9**	**1**	**2**	**5**	**6**	**7**	**8**
	U_P	**0 V**	**External shield**	**Inside shield**	**I_1+**	**I_1–**	**I_2+**	**I_2–**	**I_0+**	**I_0–**
	Brown	White	–	White/ Brown	Green	Yellow	Blue	Red	Gray	Pink

U_P = power supply voltage
Vacant pins or wires must not be used!

Shield on housing
Color assignment applies only to extension cable.

Output of EXE – ⊓⊔ TTL

12-pin
M23 flange socket

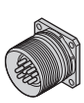

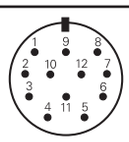

12-pin
M23 connector

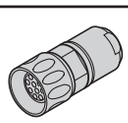

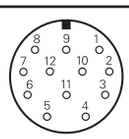

	Power supply				Incremental signals						Other signals		
	12	**2**	**10**	**11**	**5**	**6**	**8**	**1**	**3**	**4**	**7**	**/**	**9**
	U_P	**Sensor** 5 V	**0 V**	**Sensor** 0 V	**U_{a1}**	**$\overline{U_{a1}}$**	**U_{a2}**	**$\overline{U_{a2}}$**	**U_{a0}**	**$\overline{U_{a0}}$**	**$\overline{U_{aS}}$**	**U_{aS}**	**Vacant**
	Brown/ Green	Blue	White/ Green	White	Brown	Green	Gray	Pink	Red	Black	Violet	/	Yellow

Shield on housing; **U_P** = power supply voltage
Sensor: The sensor line is connected internally with the corresponding power line

HEIDENHAIN

DR. JOHANNES HEIDENHAIN GmbH
Dr.-Johannes-Heidenhain-Straße 5
83301 Traunreut, Germany
☏ +49 (8669) 31-0
FAX +49 (8669) 5061
E-Mail: info@heidenhain.de

www.heidenhain.de

For more information
- Product overview: *Interface Electronics*

598 010-21 · 10 · 10/2006 · F&W · Printed in Germany · Subject to change without notice

Automation and Metrology International, LLC
1-888-354-2525
auto-met.com