HEIDENHAIN

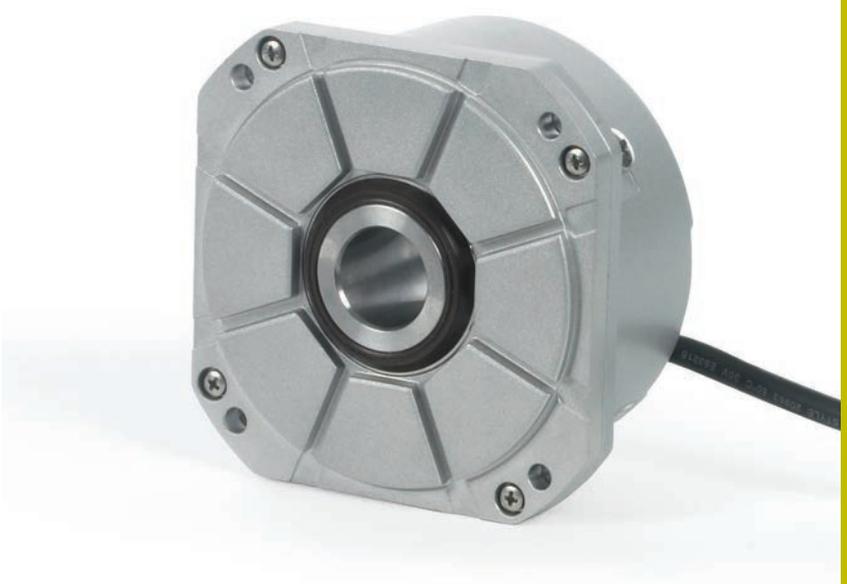

Product Information

RON 200
RON 700
RON 800
RPN 800

Incremental Angle Encoders with Integral Bearing, Hollow Shaft and Stator Coupling

02/2023

AMI
Automation and Metrology
8808 Tyler Blvd, Mentor, OH 44060
1-888-354-2525 | sales@auto-met.com
Request a quote: auto-met.com

RON 200 series

- **Integrated stator coupling**
- **Hollow through shaft (Ø 20 mm)**
- **System accuracy: ±2.5″ and ±5″**

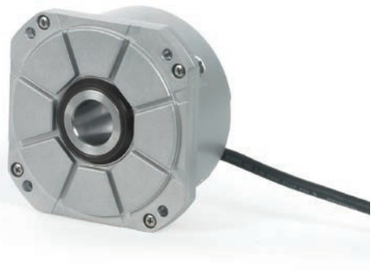

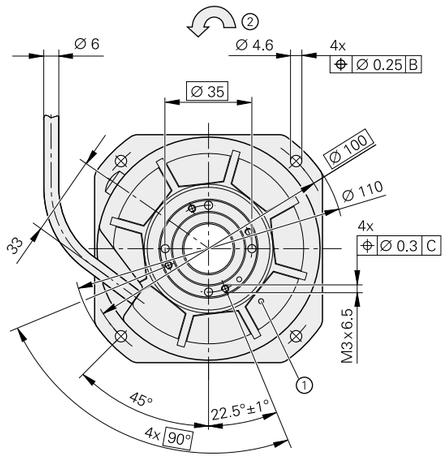

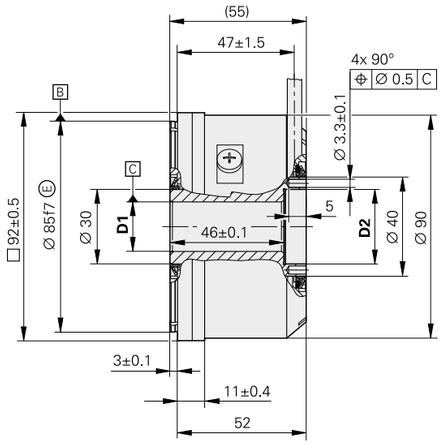

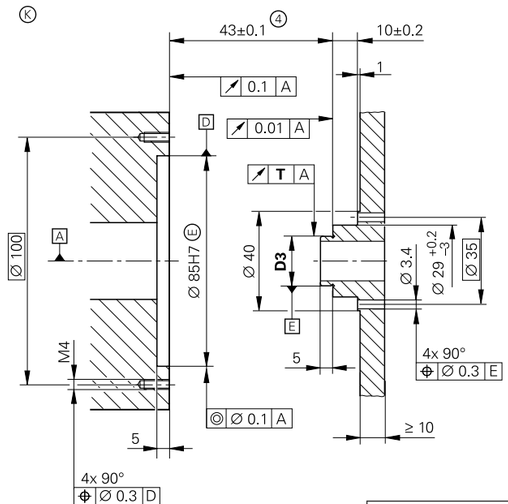

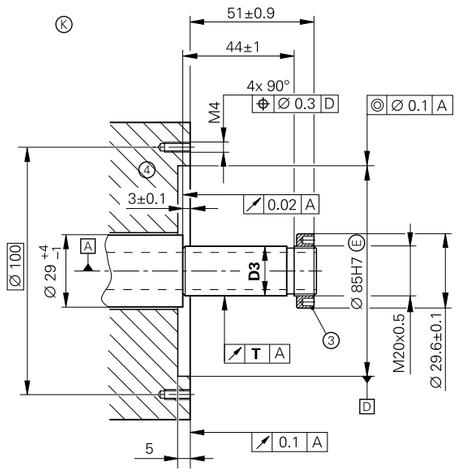

System accuracy	±2.5″	±5″
D1	Ø 20H6 (E)	Ø 20H7 (E)
D2	Ø 30H6 (E)	Ø 30H7 (E)
D3	Ø 20g6 (E)	Ø 20g7 (E)
T	0.01	0.02

mm
Tolerancing ISO 8015
ISO 2768:1989-mH
≤ 6 mm: ±0.2 mm

Radial cable (can also be used axially)
A = Bearing of mating shaft
K = Required mating dimensions
1 = Position of the reference mark signal ±5°
2 = Direction of shaft rotation for ascending position values
3 = Accessory: ring nut (ID 336669-03)
4 = Stated tolerance contains mounting tolerances and thermal expansion; no dynamic movement permitted

	Incremental **RON 275**	**RON 275**	**RON 285**	**RON 287**
Measuring standard	DIADUR circular scale with incremental track			
Line count	18000			
System accuracy	±5″			±2.5″
Position error per signal period	≤ ±0.7″			
Interface	⊓⊔TTL		∼ 1 V_{PP}	
Integrated interpolation* Output signals per rev.	5-fold 90000	10-fold 180000	–	
Reference mark*	One		*RON 2xx:* One *RON 2xx C:* Distance-coded	
Cutoff frequency –3 dB Output frequency Edge separation *a*	– ≤ 250 kHz ≥ 0.96 µs	– ≤ 1 MHz ≥ 0.22 µs	≥ 180 kHz – –	
Elec. permissible speed	≤ 166 rpm	≤ 333 rpm	–	
Electrical connection*	Cable (1 m), with or without 12-pin M23 coupling (male)			
Cable length[1]	≤ 50 m		≤ 150 m	
Supply voltage	DC 5 V ±0.5 V/≤ 150 mA (without load)			
Shaft	Hollow through shaft D = 20 mm			
Mech. permissible speed	≤ 3000 rpm			
Starting torque	≤ 0.08 Nm at 20 °C			
Moment of inertia of rotor	$73.0 \cdot 10^{-6}$ kgm^2			
Permissible axial motion of measured shaft	±0.1 mm			
Natural frequency	≥ 1200 Hz			
Vibration 55 Hz to 2000 Hz **Shock** 6 ms	≤ 100 m/s^2 (EN 60068-2-6) ≤ 200 m/s^2 (EN 60068-2-27)			
Operating temperature	*Frequent flexing:* –10 °C to 70 °C *Stationary cable:* –20 °C to 70 °C			0 °C to 50 °C
Protection EN 60529	IP64			
Mass	≈ 0.8 kg			

* Please select when ordering
1) With HEIDENHAIN cable
2) Range includes mounting tolerances and thermal expansion; no dynamic movement permitted

RON 785

- **Integrated stator coupling**
- **Hollow through shaft (Ø 50 mm)**
- **System accuracy: ±2″**

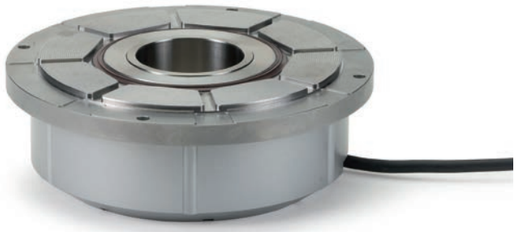

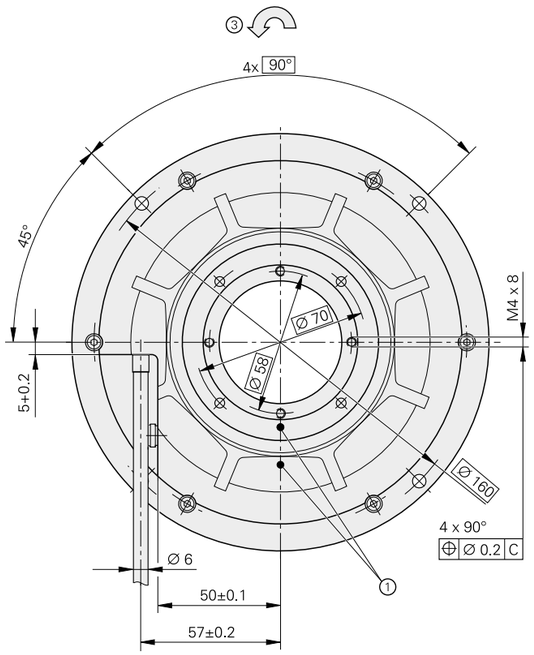

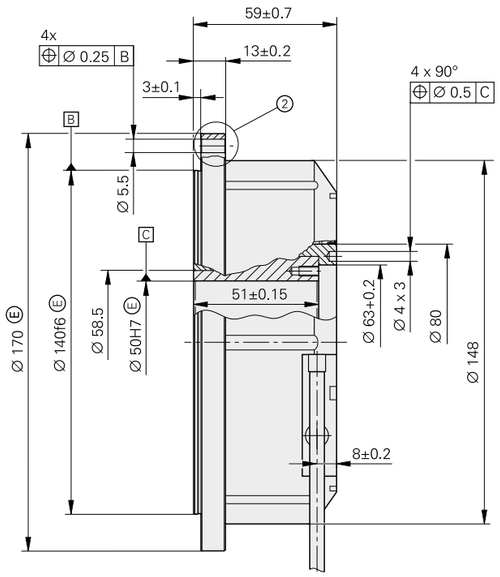

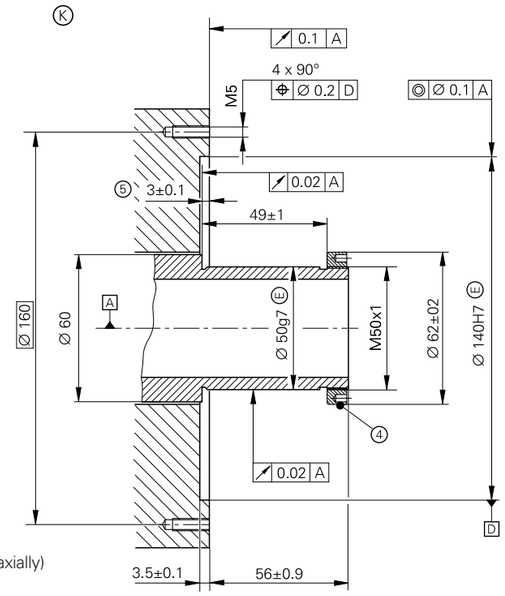

Radial cable (can also be used axially)
A = Bearing of mating shaft
K = Required mating dimensions
1 = Position of the reference mark signal ±5°
2 = Shown rotated by 45°
3 = Direction of shaft rotation for ascending position values
4 = Accessory: ring nut (ID 336669-15)
5 = Specified tolerance includes mounting tolerances and thermal expansion; no dynamic motion permitted

mm
Tolerancing ISO 8015
ISO 2768:1989-mH
≤ 6 mm: ±0.2 mm

	Incremental **RON 785**
Measuring standard	DIADUR circular scale with incremental track
Line count	18 000
System accuracy	±2″
Position error per signal period	≤ ±0.7″
Interface	∿ 1 V_{PP}
Reference mark*	*RON 785:* One *RON 785C:* Distance-coded
Cutoff frequency –3 dB	≥ 180 kHz
Electrical connection*	Cable (1 m), with or without 12-pin M23 coupling (male)
Cable length[1)]	≤ 150 m
Supply voltage	DC 5 V ±0.5 V/≤ 150 mA (without load)
Shaft	Hollow through shaft D = 50 mm
Mech. permissible speed	≤ 1000 rpm
Starting torque	≤ 0.5 Nm at 20 °C
Moment of inertia of rotor	$1.05 \cdot 10^{-3}$ kgm^2
Permissible axial motion of measured shaft	±0.1 mm
Natural frequency	≥ 1000 Hz
Vibration 55 Hz to 2000 Hz **Shock** 6 ms	≤ 100 m/s^2 (EN 60068-2-6) ≤ 200 m/s^2 (EN 60068-2-27)
Operating temperature	0 °C to 50 °C
Protection EN 60529	IP64
Mass	≈ 2.5 kg

* Please select when ordering
1) With HEIDENHAIN cable
2) Range includes mounting tolerances and thermal expansion; no dynamic movement permitted

RON 786/RON 886/RPN 886

- **Integrated stator coupling**
- **Hollow through shaft (Ø 60 mm)**
- **System accuracy: ±1″ or ±2″**

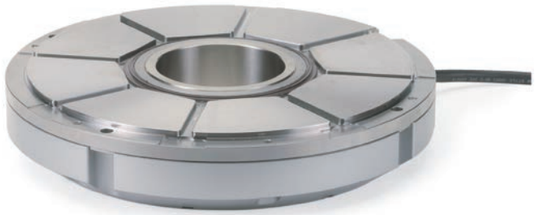

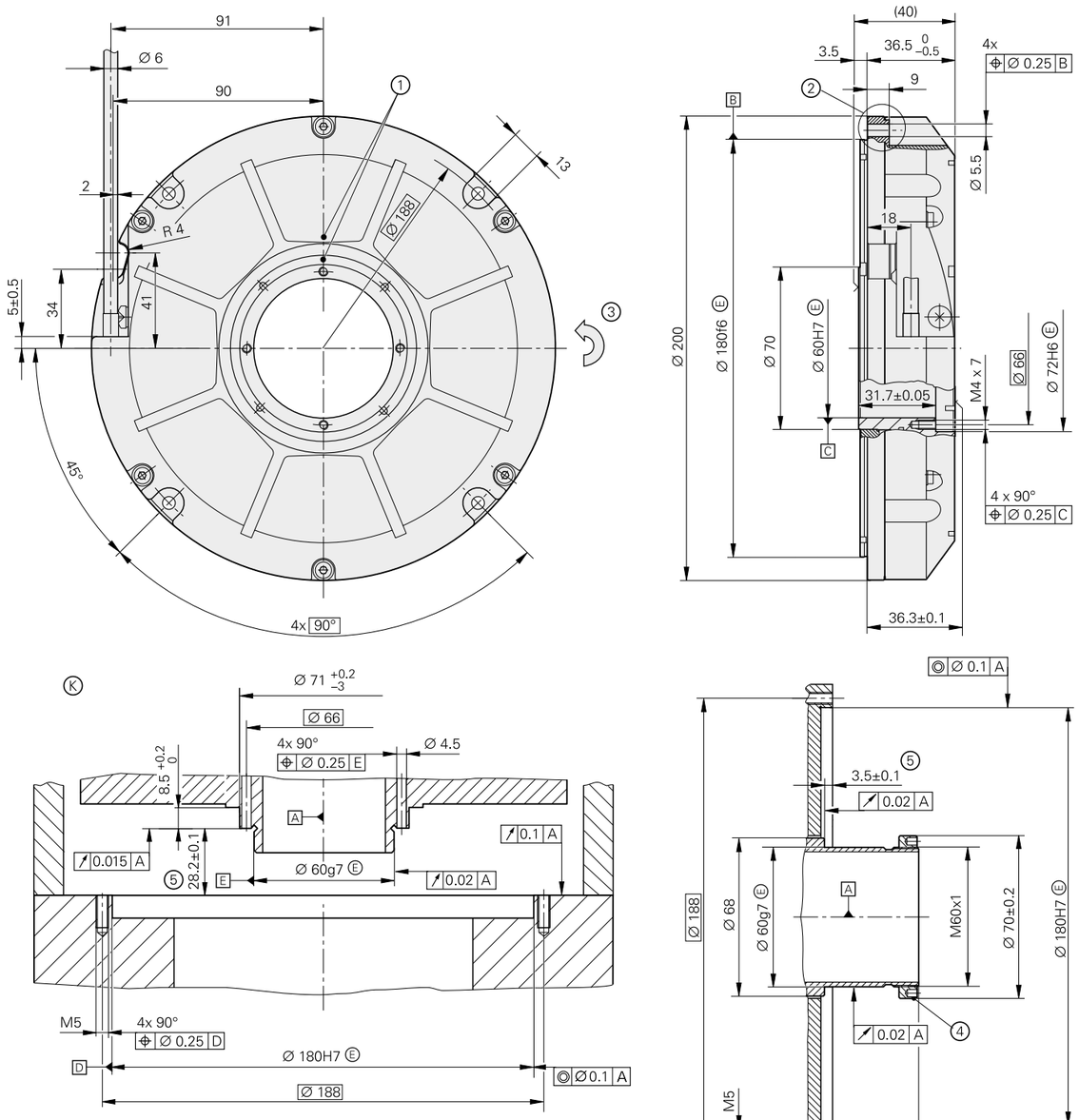

Radial cable (can also be used axially)
Ⓐ = Bearing of mating shaft
Ⓚ = Required mating dimensions
1 = Position of the reference mark signal ±5°
2 = Shown rotated by 45°
3 = Direction of shaft rotation for ascending position values
4 = Accessory: ring nut ID 336669-15
5 = Stated tolerance includes mounting tolerances and thermal expansion; no dynamic movement permitted

mm
Tolerancing ISO 8015
ISO 2768:1989-mH
≤ 6 mm: ±0.2 mm

	Incremental **RON 786**	**RON 886**	**RPN 886**
Measuring standard	DIADUR circular scale with incremental track		
Line count*	18000 36000	36000	90000 (≙ 180000 signal periods)
System accuracy	±2″	±1″	
Position error per signal period	*18000 lines:* ≤ ±0.7″ *36000 lines:* ≤ ±0.35″	≤ ±0.35″	≤ ±0.1″
Interface	∿ 1 V_{PP}		
Reference mark*	*RON x86:* One *RON x86C:* Distance-coded		One
Cutoff frequency –3 dB –6 dB	≥ 180 kHz		≥ 800 kHz ≥ 1300 kHz
Electrical connection*	Cable (1 m), with or without 12-pin M23 coupling (male)		
Cable length[1]	≤ 150 m		
Supply voltage	DC 5 V ±0.5 V/≤ 150 mA (without load)		DC 5 V ±0.5 V/≤ 250 mA (without load)
Shaft	Hollow through shaft D = 60 mm		
Mech. permissible speed	≤ 1000 rpm		
Starting torque	≤ 0.5 Nm at 20 °C		
Moment of inertia of rotor	$1.20 \cdot 10^{-3}$ kgm^2		
Permissible axial motion of measured shaft	≤ ±0.1 mm		
Natural frequency	≥ 1000 Hz		≥ 500 Hz
Vibration 55 Hz to 2000 Hz **Shock** 6 ms	≤ 100 m/s^2 (EN 60068-2-6) ≤ 200 m/s^2 (EN 60068-2-27)		≤ 50 m/s^2 (EN 60068-2-6) ≤ 200 m/s^2 (EN 60068-2-27)
Operating temperature	0 °C to 50 °C		
Protection EN 60529	IP64		
Mass	≈ 2.5 kg		

* Please select when ordering
1) With HEIDENHAIN cable
2) Range includes mounting tolerances and thermal expansion; no dynamic movement permitted

Mechanical design types and mounting
RON, RPN

The **RON** and **RPN** angle encoders have an integral bearing, a hollow shaft and a stator-side coupling. The measured shaft is directly connected to the shaft of the angle encoder.

Setup
The circular scale is rigidly affixed to the hollow shaft. The scanning unit rides on the shaft on ball bearings and is connected to the housing with a coupling on the stator side. The stator coupling and the sealing design compensate for axial and radial mounting error to a high degree without restricting accuracy or functionality. This thereby simplifies mounting. During angular acceleration of the shaft, the stator coupling must absorb only the torque resulting from friction within the bearing. Angle encoders with stator coupling therefore provide excellent dynamic performance.

Mounting
The housing of the RON and RPN is firmly connected to the mounting surface of the machine part by means of a mounting flange and a centering collar.

- **RON and RPN shaft coupling**

Shaft coupling with ring nut
The shaft is designed as a hollow through shaft. For installation, the hollow through shaft of the angle encoder is seated onto the machine shaft and fastened from the encoder's front face with a ring nut. The ring nut can be easily tightened with the mounting aid.

Front-face shaft coupling
Especially for rotary tables, it is often helpful to integrate the angle encoder into the table such that the encoder is accessible when the rotor is lifted. The hollow shaft is connected through the front-face threaded holes by means of special mounting elements made for the given design (not included in delivery). In order to meet the radial and axial runout requirements, the interior hole ① and the shoulder surface ② must be used as the mounting surfaces for the front-face shaft coupling.

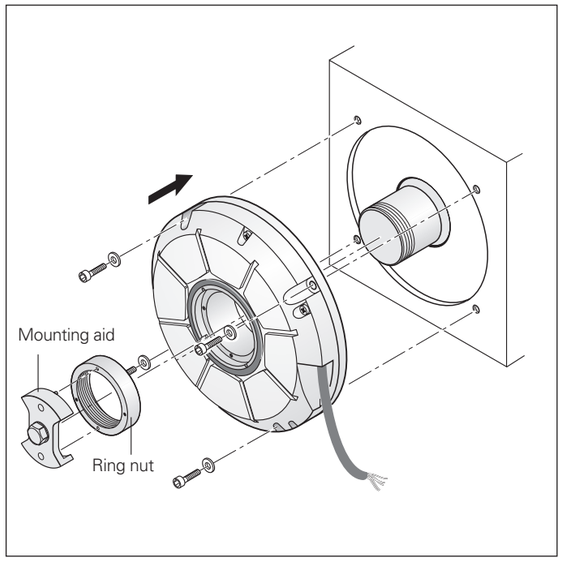

Mounting an angle encoder with a ring nut

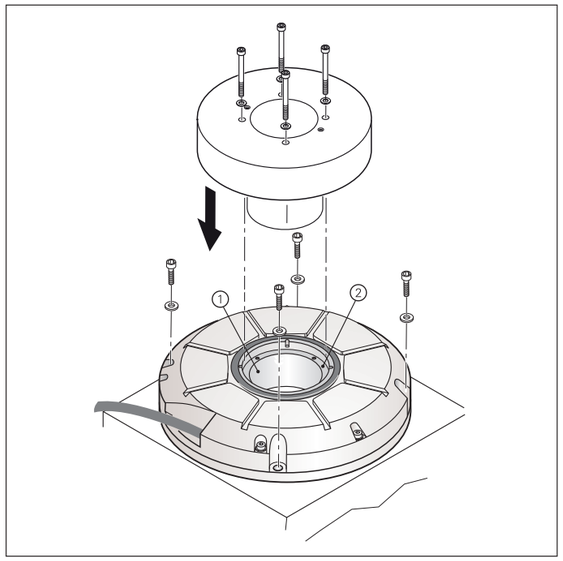

Example of connecting an encoder to the shaft face

Ring nuts for the RON and RPN
HEIDENHAIN offers special ring nuts for RON and RPN angle encoders. Choose the tolerance of the shaft thread such that the ring nut can be tightened easily, with a small amount of axial play. This guarantees that the load is evenly distributed on the shaft connection and prevents undesirable forces on the encoder's hollow shaft.

Ring nut for
Hollow shaft Ø 20 mm: ID 336669-03
Hollow shaft Ø 50 mm: ID 336669-15
Hollow shaft Ø 60 mm: ID 336669-11

Ring nut for	L1	L2	D1	D2	D3	B
Hollow shaft Ø 50	Ø 62±0.2	Ø 55	(Ø 49.052 ±0.075)	Ø 49.469 ±0.059	(Ø 50.06)	1
Hollow shaft Ø 60	Ø 70±0.2	Ø 65	(Ø 59.052 ±0.075)	Ø 59.469 ±0.059	(Ø 60.06)	1

Ring nut for hollow shaft Ø 20 mm

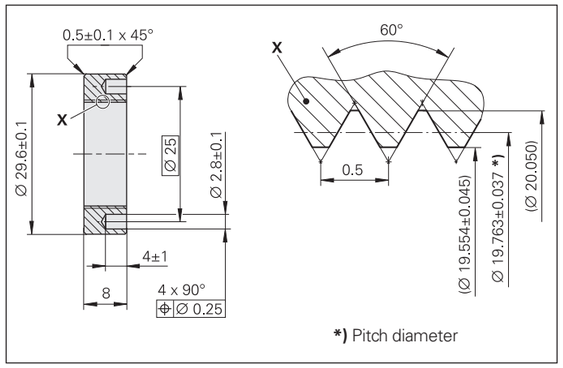

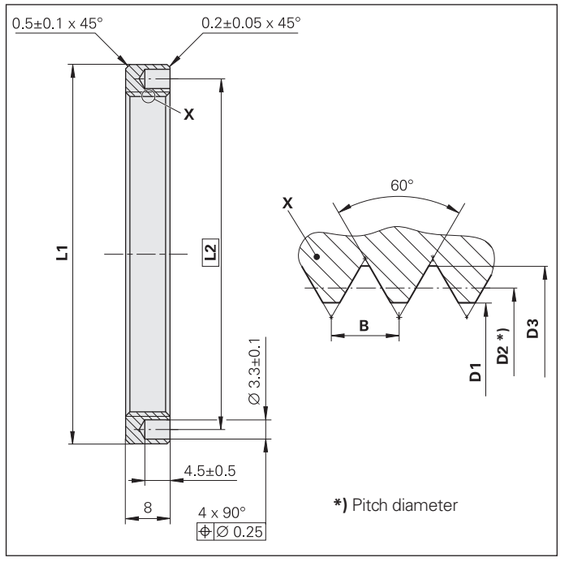

PWW inspection tool for RON/RPN angle encoders
The PWW makes it fast and easy to inspect the most significant mating dimensions. Its built-in measuring equipment measures position and radial runout, for example. It is best suited for the shaft coupling with a ring nut.

PWW for
Hollow shaft Ø 20 mm: ID 516211-01
Hollow shaft Ø 50 mm: ID 516211-02
Hollow shaft Ø 60 mm: ID 516211-03

Mounting tool for HEIDENHAIN ring nuts
The mounting aid is used to tighten the ring nut. Its pins lock into the holes in the ring nut. A torque wrench provides the necessary tightening torque.

Mounting aid for ring nuts with
Hollow shaft Ø 20 mm: ID 530334-03
Hollow shaft Ø 50 mm: ID 530334-15
Hollow shaft Ø 60 mm: ID 530334-11

Materials required for mounting the RON and RPN
The machine shaft and the fastening components must be made of steel. The material must exhibit a thermal coefficient of expansion $\alpha_{therm} = 10 \cdot 10^{-6}\ K^{-1}$ to $\alpha_{therm} = 16 \cdot 10^{-6}\ K^{-1}$.
Additionally, the material must meet the following specifications:
- For hollow-shaft connection
  $R_m \geq 650\ N/mm^2$
  $R_{p0.2} \geq 370\ N/mm^2$
- For housing connection
  $R_{p0.2} \geq 370\ N/mm^2$

Electrical connection

∿ 1 V_{PP} incremental signals

Pin layout

12-pin M23 coupling

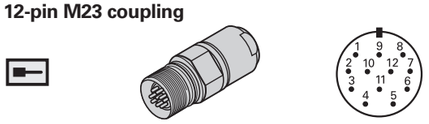

12-pin M23 connector

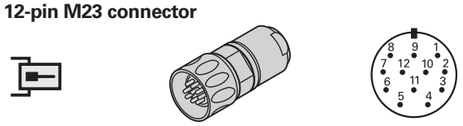

15-pin D-sub connector
For HEIDENHAIN controls and IK 220

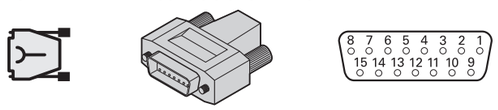

15-pin D-sub connector
For encoder or PWM 20

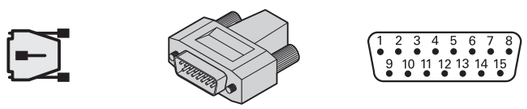

	Power supply				Incremental signals						Other signals		
	12	**2**	**10**	**11**	**5**	**6**	**8**	**1**	**3**	**4**	**9**	**7**	**/**
	1	**9**	**2**	**11**	**3**	**4**	**6**	**7**	**10**	**12**	**5/8/13/15**	**14**	**/**
	4	**12**	**2**	**10**	**1**	**9**	**3**	**11**	**14**	**7**	**5/6/8/15**	**13**	**/**
	U_P	**Sensor**[1] U_P	**0 V**	**Sensor**[1] 0 V	**A+**	**A–**	**B+**	**B–**	**R+**	**R–**	**Vacant**	**Vacant**	**Vacant**
	Brown/ Green	Blue	White/ Green	White	Brown	Green	Gray	Pink	Red	Black	/	Violet	Yellow

Cable shield connected to housing; **U_P** = Power supply voltage
Sensor: The sense line is connected in the encoder with the corresponding power line.
Vacant pins or wires must not be used!
[1] **LIDA 2xx:** vacant

⊓⊔ TTL incremental signals

Pin layout

12-pin M23 coupling

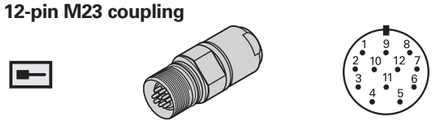

12-pin M23 connector

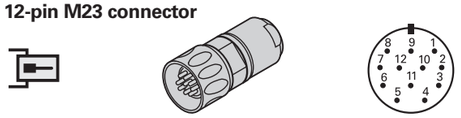

15-pin D-sub connector
For HEIDENHAIN controls and IK 220

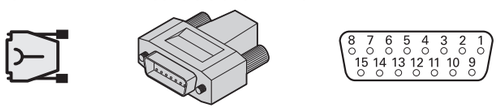

15-pin D-sub connector
For encoder or PWM 20

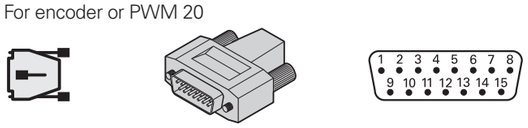

	Power supply				Incremental signals						Other signals		
	12	**2**	**10**	**11**	**5**	**6**	**8**	**1**	**3**	**4**	**7**	**/**	**9**[3]
	1	**9**	**2**	**11**	**3**	**4**	**6**	**7**	**10**	**12**	**14**	**8/13/15**	**5**
	4	**12**	**2**	**10**	**1**	**9**	**3**	**11**	**14**	**7**	**13**	**5/6/8**	**15**[3]
	U_P	**Sensor**[1] U_P	**0 V**	**Sensor**[1] 0 V	**U_{a1}**	**$\overline{U_{a1}}$**	**U_{a2}**	**$\overline{U_{a2}}$**	**U_{a0}**	**$\overline{U_{a0}}$**	**$\overline{U_{aS}}$**[2]	**Vacant**	**Vacant**
	Brown/ Green	Blue	White/ Green	White	Brown	Green	Gray	Pink	Red	Black	Violet	/	Yellow

Cable shield connected to housing; **U_P** = Power supply voltage
Sensor: The sense line is connected in the encoder with the corresponding power line.
Vacant pins or wires must not be used!
[1] **LIDA 2xx:** vacant / [2] **ERO 14xx:** vacant
[3] **Exposed linear encoders:** conversion from TTL to 11 μA_{PP} for the PWT, otherwise not assigned

HEIDENHAIN

DR. JOHANNES HEIDENHAIN GmbH
Dr.-Johannes-Heidenhain-Straße 5
83301 Traunreut, Germany
☎ +49 8669 31-0
FAX +49 8669 32-5061
info@heidenhain.de

www.heidenhain.com

This Product Information document supersedes all previous editions, which thereby become invalid. The basis for ordering from HEIDENHAIN is always the Product Information document edition valid when the order is placed.

More information:

Comply with the requirements described in the following documents to ensure correct and intended operation:

- Brochure: *Angle Encoders with Integral Bearing* 591109-xx
- Brochure: *Interfaces of HEIDENHAIN Encoders* 1078628-xx
- Brochure: *Cables and Connectors* 1206103-xx

For brochures and Product Information documents, visit *www.heidenhain.com*.

1382219 · 00 · A · 02 · 02/2023 · PDF

AMI Automation and Metrology
1-888-354-2525
auto-met.com