HEIDENHAIN

Product Information

ROC 2000
ROC 7000

Absolute Angle Encoders
with Integral Bearing for
Separate Shaft Coupling

06/2022

AMI
Automation and Metrology
8808 Tyler Blvd, Mentor, OH 44060
1-888-354-2525 | sales@auto-met.com
Request a quote: auto-met.com

ROC 2000 series

- **For a separate shaft coupling**
- **System accuracy: ±5″**

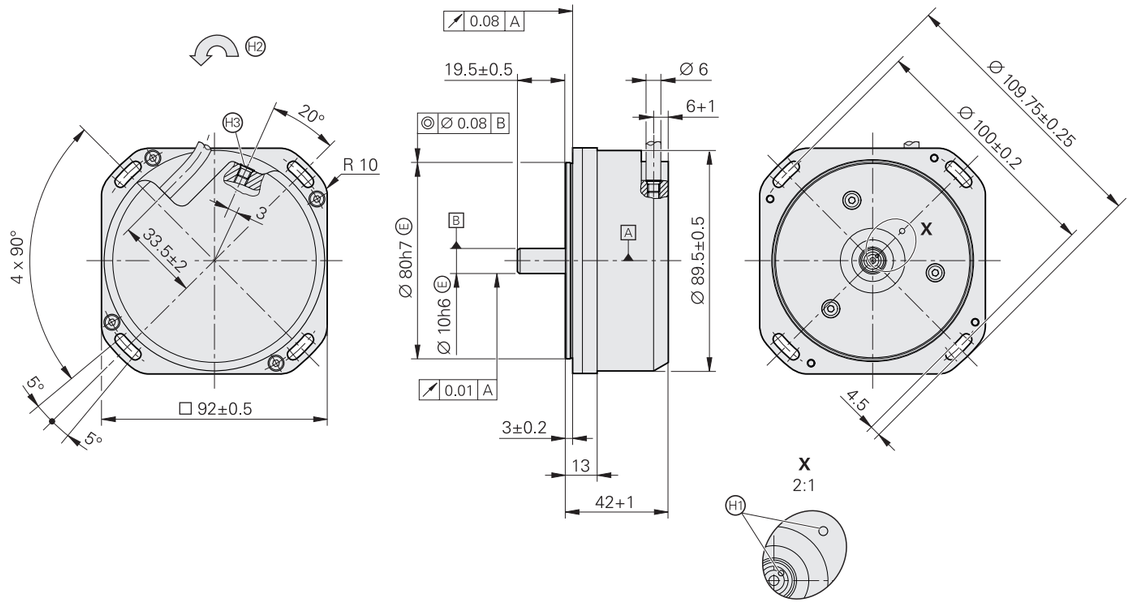

mm
Tolerancing ISO 8015
ISO 2768:1989-mH
≤ 6 mm: ±0.2 mm

A = Bearing
H1 = Position of the reference mark signal ±5°
H2 = Direction of shaft rotation for output signals in accordance with the interface description
H3 = M5 compressed-air inlet

	Absolute **ROC 2310**	**ROC 2380**	**ROC 2390 F**	**ROC 2390 M**
Measuring standard	DIADUR circular scale with absolute track and incremental track (16 384 lines)			
System accuracy	±5″			
Position error per signal period	±0.4″			
Interface	EnDat 2.2		Fanuc serial interface αi interface	Mitsubishi high speed interface
Ordering designation	EnDat22	EnDat02	Fanuc05	Mit03-4
Position values per rev.	67 108 864 (26 bits); *Fanuc α interface:* 8 388 608 (23 bits)			
Electrically permissible speed	≤ 3000 rpm for continuous position values	≤ 1500 rpm for continuous position values	≤ 3000 rpm for continuous position values	
Clock frequency Calculation time t_{cal}	≤ 16 MHz ≤ 5 µs	≤ 2 MHz ≤ 5 µs	–	
Incremental signals Cutoff frequency –3 dB	–	∿ 1 V_{PP} ≥ 400 kHz	–	
Electrical connection	Cable (1 m) with M12 coupling (male) *With EnDat02:* cable (1 m) with 17-pin M23 coupling (male)			
Cable length[1]	≤ 150 m		≤ 50 m	≤ 30 m
Supply voltage	DC 3.6 V to 14 V			
Power consumption[2] (max.)	*3.6 V:* ≤ 1.1 W; *14 V:* ≤ 1.3 W			
Current consumption (typical)	*5 V:* 140 mA (without load)			
Shaft	Solid shaft D = 10 mm			
Mech. permissible speed	≤ 3000 rpm			
Starting torque	≤ 0.02 Nm at 20 °C			
Moment of inertia of rotor	$50.0 \cdot 10^{-6}$ kgm^2			
Permissible shaft load	*Axial:* 30 N *Radial:* 30 N at shaft end			
Vibration 55 Hz to 2000 Hz **Shock** 6 ms	≤ 200 m/s^2 (EN 60068-2-6) ≤ 200 m/s^2 (EN 60068-2-27)			
Operating temperature	*Moving cable:* –10 °C to 60 °C *Fixed cable:* –20 °C to 60 °C			
Protection EN 60529	IP64			
Mass	≈ 1.0 kg			

* Please select when ordering
[1] With HEIDENHAIN cable; ≤ 8 MHz
[2] See *General electrical information* in the *Interfaces of HEIDENHAIN Encoders* brochure

ROC 7000

- **For a separate shaft coupling**
- **System accuracy ±2″**

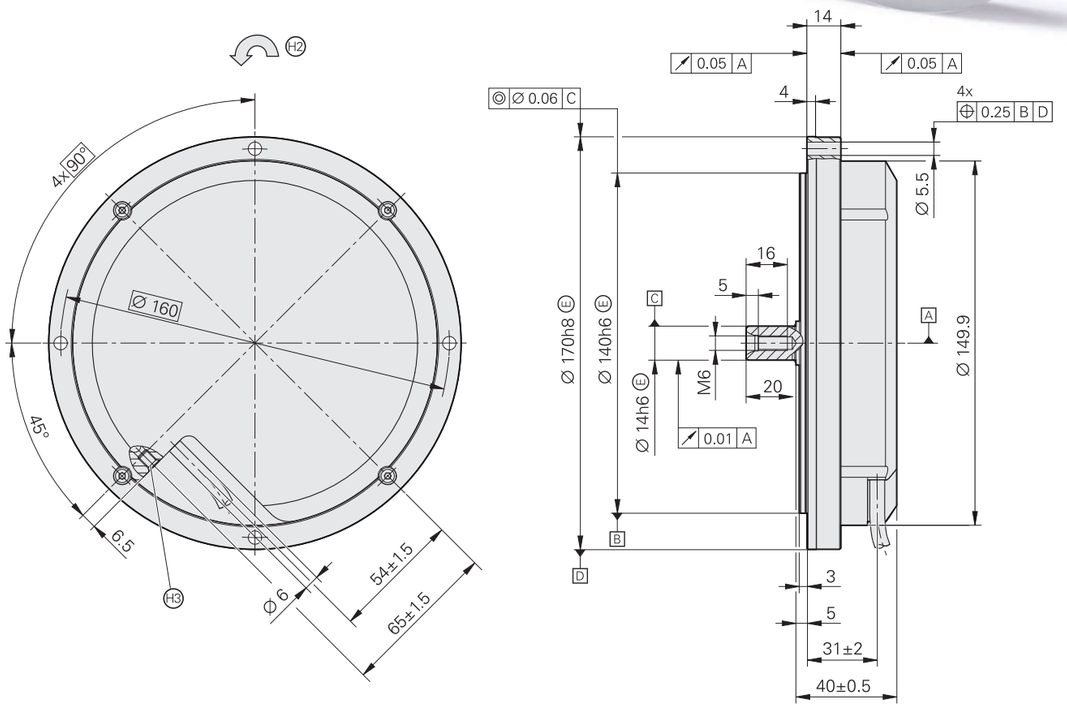

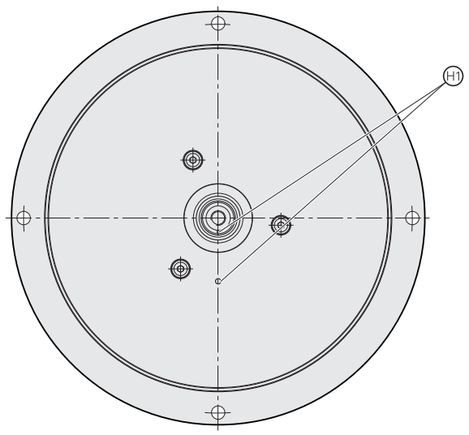

mm
Tolerancing ISO 8015
ISO 2768:1989-mH
≤ 6 mm: ±0.2 mm

A = Bearing
H1 = Position of the reference mark signal ±5°
H2 = Direction of shaft rotation for output signals in accordance with the interface description
H3 = M5 compressed-air inlet

	Absolute **ROC 7310**	**ROC 7380**	**ROC 7390F**	**ROC 7390M**
Measuring standard	DIADUR circular scale with absolute track and incremental track (16 384 lines)			
System accuracy	±2″			
Position error per signal period	±0.4″			
Interface	EnDat 2.2		Fanuc serial interface αi interface	Mitsubishi high speed interface
Ordering designation	EnDat22	EnDat02	Fanuc05	Mit03-4
Position values per rev.	268 435 456 (28 bits); *Fanuc α interface:* 134 217 728 (27 bits)			
Electrically permissible speed	≤ 3000 rpm for continuous position values	≤ 1500 rpm for continuous position values	≤ 3000 rpm for continuous position values	
Clock frequency Calculation time t_{cal}	≤ 16 MHz ≤ 5 µs	≤ 2 MHz ≤ 5 µs	–	
Incremental signals Cutoff frequency –3 dB	–	∿ 1 V_{PP} ≥ 400 kHz	–	
Electrical connection	Cable (1 m) with M12 coupling (male) *With EnDat02:* cable (1 m) with 17-pin M23 coupling (male)			
Cable length[1]	≤ 150 m		≤ 50 m	≤ 30 m
Supply voltage	DC 3.6 V to 14 V			
Power consumption[2] (max.)	*3.6 V:* ≤ 1.1 W; *14 V:* ≤ 1.3 W			
Current consumption (typical)	*5 V:* 140 mA (without load)			
Shaft	Solid shaft D = 14 mm			
Mech. permissible speed	≤ 3000 rpm			
Starting torque	≤ 0.025 Nm at 20 °C			
Moment of inertia of rotor	$65.0 \cdot 10^{-6}$ kgm^2			
Permissible shaft load	*Axial:* 30 N *Radial:* 30 N at shaft end			
Vibration 55 Hz to 2000 Hz **Shock** 6 ms	≤ 200 m/s^2 (EN 60068-2-6) ≤ 200 m/s^2 (EN 60068-2-27)			
Operating temperature	0 °C to 50 °C			
Protection EN 60529	IP64			
Mass	≈ 1.6 kg			

* Please select when ordering
[1] With HEIDENHAIN cable; ≤ 8 MHz
[2] See *General electrical information* in the *Interfaces of HEIDENHAIN Encoders* brochure

Shaft coupling

Angle encoders of the **ROC** product family require a separate coupling for connection to the drive shaft. The shaft coupling compensates for axial movement and misalignment between the shafts, thereby preventing an excessive load on the bearing of the angle encoder. For realizing high accuracies, it is necessary that the shaft of the angle encoder is optimally aligned with the shaft of the machine. The HEIDENHAIN product portfolio includes diaphragm couplings and flat couplings designed for connecting the shaft of the ROC angle encoder to the drive shaft.

Mounting
ROC angle encoders have an integral mounting flange with a centering collar. The encoder shaft is connected to the machine shaft by means of a diaphragm coupling or flat coupling.

Shaft couplings
The shaft coupling compensates for axial movement and misalignment between the encoder shaft and the drive shaft, thereby preventing excessive encoder bearing loads.

Radial offset λ

Angular error α

Axial offset δ

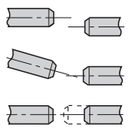

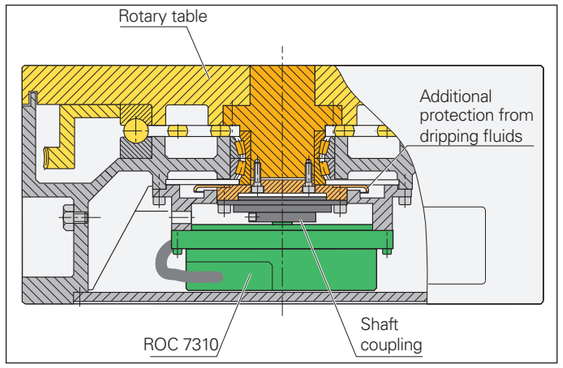

Mounting example ROC 7310

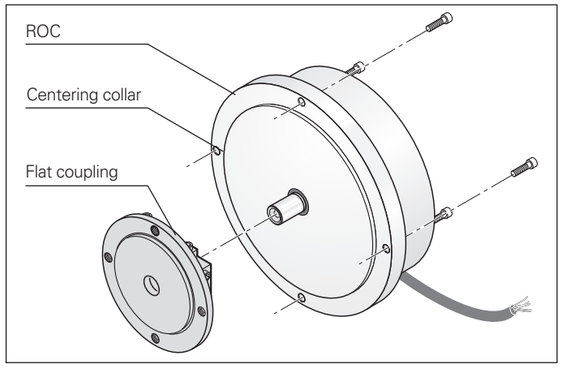

Mounting an ROC with a flat coupling

Shaft coupling	ROC 2000 series		ROC 7000 series		
	K 03 Diaphragm coupling	**K 18** Flat coupling	**K 01** Diaphragm coupling	**K 15** Flat coupling	**K 16** Flat coupling
Hub bore	10 mm		14 mm		
Kinematic transfer error	±2″ At λ ≤ 0.1 mm and α ≤ 0.09°	±3″	±1″	±0.5″ At λ ≤ 0.05 mm and α ≤ 0.03°	
Torsional rigidity	1500 Nm/rad	1200 Nm/rad	4000 Nm/rad	6000 Nm/rad	4000 Nm/rad
Permissible torque	0.2 Nm	0.5 Nm			
Perm. radial offset λ	≤ 0.3 mm				
Perm. angular error α	≤ 0.5°			≤ 0.2°	≤ 0.5°
Perm. axial offset δ	≤ 0.2 mm			≤ 0.1 mm	≤ 1 mm
Moment of inertia (approx.)	$20 \cdot 10^{-6}$ kgm²	$75 \cdot 10^{-6}$ kgm²	$200 \cdot 10^{-6}$ kgm²		$400 \cdot 10^{-6}$ kgm²
Permissible shaft speed	10 000 rpm	1000 rpm	3000 rpm	1000 rpm	
Tightening torque of clamping screws (approx.)	1.2 Nm		2.5 Nm	1.2 Nm	
Mass	100 g	117 g	180 g	250 g	410 g

K 03 diaphragm coupling
ID 200313-04

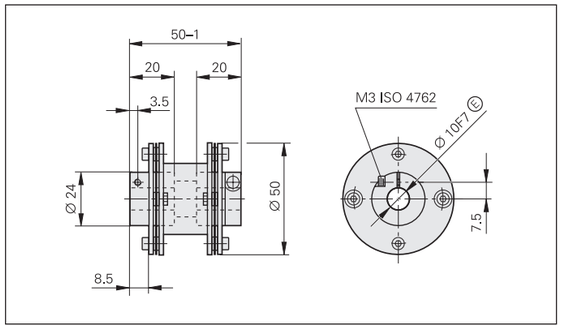

K 18 flat coupling
ID 202227-01

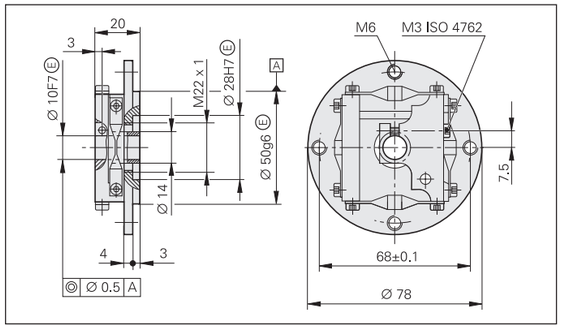

K 01 diaphragm coupling
ID 200301-02

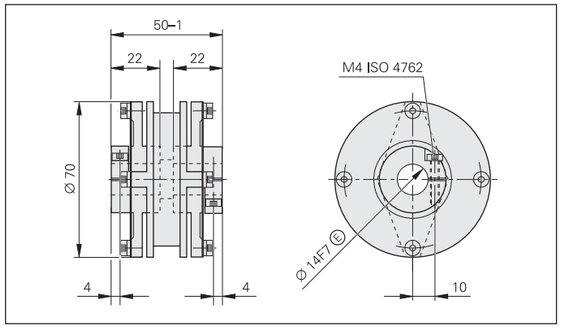

K 15 flat coupling
ID 255797-01

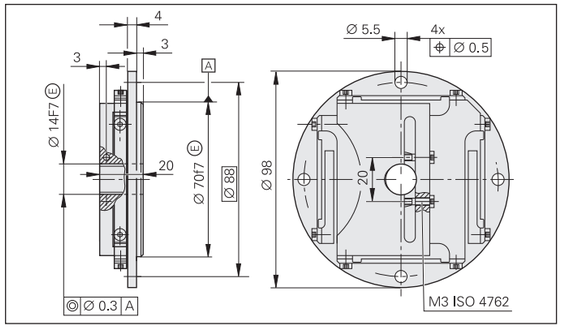

K 16 flat coupling
ID 258878-01

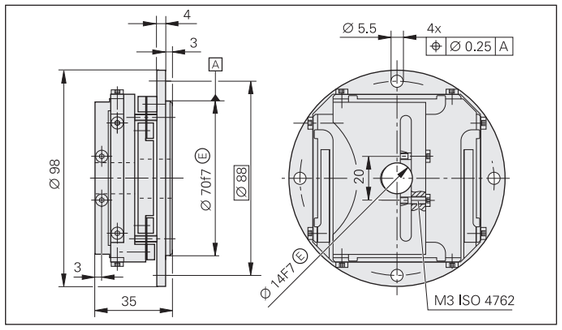

mm

Tolerancing ISO 8015
ISO 2768:1989-mH
≤ 6 mm: ±0.2 mm

Electrical connection

EnDat pin layout without incremental signals

8-pin M12 coupling

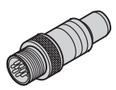

	Power supply				Serial data transmission			
	8	**2**	**5**	**1**	**3**	**4**	**7**	**6**
	U_P	**Sensor** U_P	**0 V**	**Sensor** 0 V	**DATA**	**$\overline{\text{DATA}}$**	**CLOCK**	**$\overline{\text{CLOCK}}$**
	Brown/Green	Blue	White/Green	White	Gray	Pink	Violet	Yellow

Cable shield connected to housing; **U_P** = Power supply voltage
Sensor: The sense line is connected in the encoder with the corresponding power line.
Vacant pins or wires must not be used!

EnDat pin layout with incremental signals

17-pin M23 coupling

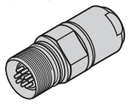

	Power supply					Incremental signals[1]				Serial data transfer			
	7	**1**	**10**	**4**	**11**	**15**	**16**	**12**	**13**	**14**	**17**	**8**	**9**
	U_P	**Sensor** U_P	**0 V**	**Sensor** 0 V	**Internal shield**	**A+**	**A–**	**B+**	**B–**	**DATA**	**$\overline{\text{DATA}}$**	**CLOCK**	**$\overline{\text{CLOCK}}$**
	Brown/ Green	Blue	White/ Green	White	/	Green/ Black	Yellow/ Black	Blue/ Black	Red/ Black	Gray	Pink	Violet	Yellow

Cable shield connected to housing; **U_P** = Power supply voltage
Sensor: The sense line is connected in the encoder with the corresponding power line.
Vacant pins or wires must not be used!
[1] Only with ordering designations EnDat01 and EnDat02

Fanuc pin layout

8-pin M12 coupling

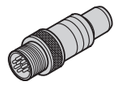

	Power supply					Serial data transmission			
	8	**2**	**5**	**1**	**–**	**3**	**4**	**7**	**6**
	U_P	**Sensor** U_P	**0 V**	**Sensor** 0 V	**Shield**	**Serial DATA**	**$\overline{\text{Serial DATA}}$**	**Request**	**$\overline{\text{Request}}$**
	Brown/Green	Blue	White/Green	White	–	Gray	Pink	Violet	Yellow

Cable shield connected to housing; **U_P** = Power supply voltage
Sensor: The sense line is connected in the encoder with the corresponding power line.
Vacant pins or wires must not be used!

Mitsubishi pin layout

8-pin M12 coupling

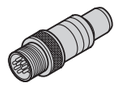

	Power supply				Serial data transmission			
	8	**2**	**5**	**1**	**3**	**4**	**7**	**6**
	U_P	**Sensor** U_P	**0 V**	**Sensor** 0 V	**Serial DATA**	**$\overline{\text{Serial DATA}}$**	**Request Frame**	**$\overline{\text{Request Frame}}$**
	Brown/Green	Blue	White/Green	White	Gray	Pink	Violet	Yellow

Cable shield connected to housing; **U_P** = Power supply voltage
Sensor: The sense line is connected in the encoder with the corresponding power line.
Vacant pins or wires must not be used!

Adapter cables and connecting cables

EnDat adapter cables and connecting cable without incremental signals

PUR connecting cable **Ø 6 mm;** 2 × (2 × 0.09 mm^2) + 2 x (2 × 0.16 mm^2)		A_P = 2 × 0.16 mm^2
Adapter cable with 8-pin M12 connector (female) and 15-pin D-sub connector (female)		1036521-xx
Adapter cable with 8-pin M12 connector (female) and 15-pin D-sub connector (male)		1036526-xx
Connecting cable with 8-pin M12 connector (female) and 8-pin M12 coupling (male)		1036372-xx

EnDat adapter cables and connecting cable with incremental signals

PUR connecting cable **Ø 8 mm;** 4 × (2 × 0.16 mm^2) + 4 × 0.5 mm^2 + 4 × 0.16 mm^2)		A_P = 2 × 0.5 mm^2
Adapter cable with 17-pin M23 connector (female) and 15-pin D-sub connector (female)		332115-xx
Adapter cable with 17-pin M23 connector (female) and 15-pin D-sub connector (male)		324544-xx
Connecting cable with 17-pin M23 connector (female) and stripped cable end		309778-xx

Fanuc/Mitsubishi connecting cables

PUR cable **Ø 6 mm;** 2 × (2 × 0.09 mm^2) + 2 × (2 × 0.16 mm^2)		A_P = 2 × 0.16 mm^2
Connecting cable with 8-pin M12 connector (female) and 8-pin M12 coupling (male)		1036372-xx

A_P: Cross section of power supply lines
Ø: Cable diameter (for bend radii, see the *Interfaces of HEIDENHAIN Encoders* brochure)
For other cables, see the *Cables and Connectors* brochure.

HEIDENHAIN

DR. JOHANNES HEIDENHAIN GmbH
Dr.-Johannes-Heidenhain-Straße 5
83301 Traunreut, Germany
☏ +49 8669 31-0
FAX +49 8669 32-5061
info@heidenhain.de

www.heidenhain.com

This Product Information document supersedes all previous editions, which thereby become invalid. The basis for ordering from HEIDENHAIN is always the Product Information document edition valid when the order is placed.

More information:

Comply with the requirements described in the following documents to ensure correct and intended operation:

- Brochure: *Angle Encoders with Integral Bearing* 591109-xx
- Brochure: *Interfaces of HEIDENHAIN Encoders* 1078628-xx
- Brochure: *Cables and Connectors* 1206103-xx

For brochures and Product Information documents, visit *www.heidenhain.com*.

1132267 · 02 · A · 02 · 06/2022 · PDF

AMI
Automation and Metrology
1-888-354-2525
auto-met.com