ROC/ROQ/ROD 400 series

Absolute and incremental rotary encoders
- **Synchro flange**
- **Solid shaft for separate shaft coupling**

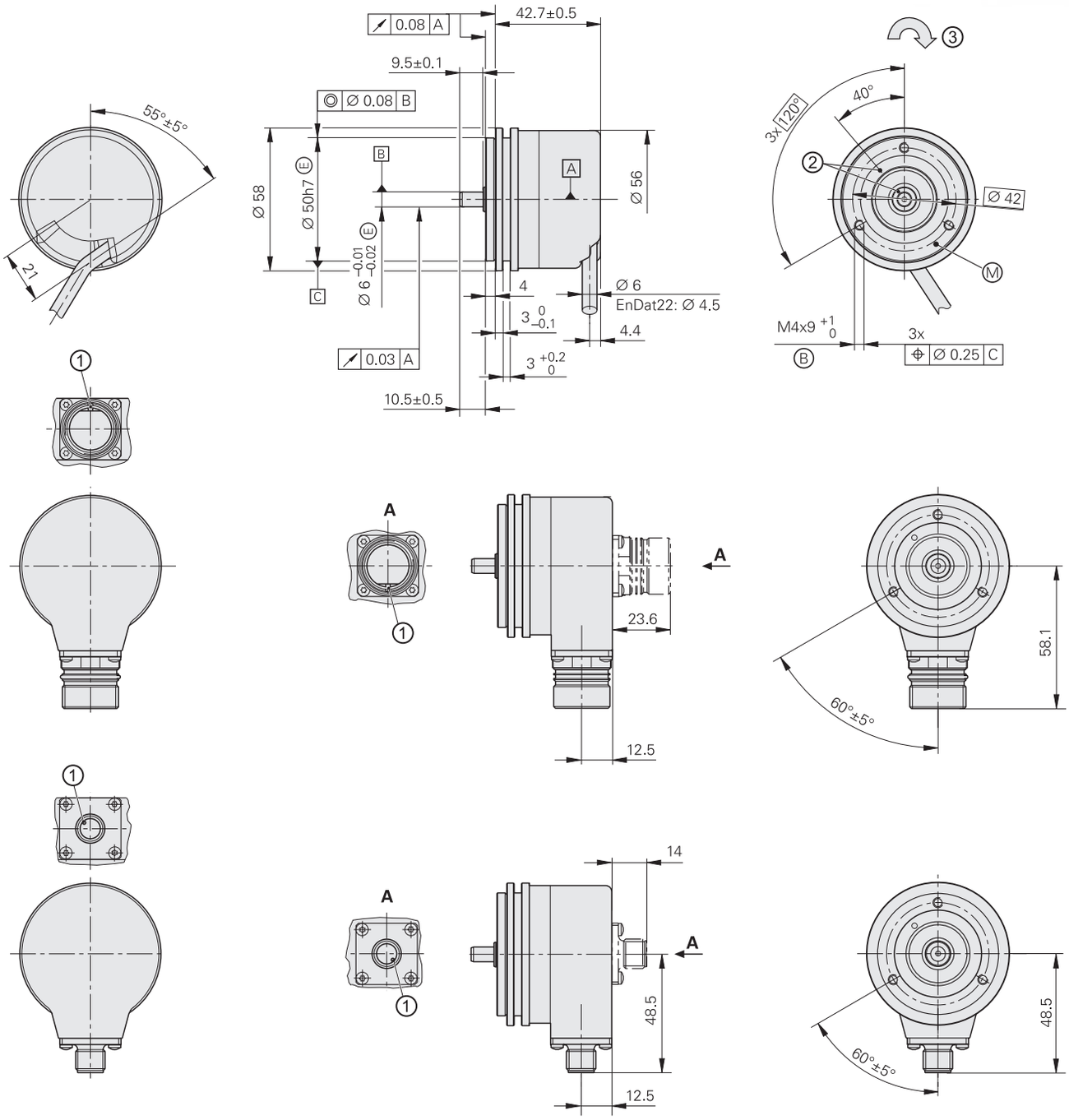

mm
Tolerancing ISO 8015
ISO 2768:1989-mH
≤ 6 mm: ±0.2 mm

Radial cable (can also be used axially)
A = Bearing
B = Fastening thread
M = Measuring point for operating temperature
1 = Connector coding
2 = ROD reference mark position for shaft and flange ±30°
3 = Incremental rotary encoders: direction of shaft rotation for output signals as per interface description
Absolute rotary encoders: direction of shaft rotation for ascending position values

	Absolute **Singleturn** **ROC 425** Functional Safety	**ROC 413**	
Interface*	EnDat 2.2	EnDat 2.2	SSI
Ordering designation	EnDat22	EnDat01	SSI39r1
Positions/revolution	33 554 432 (25 bits)	8192 (13 bits)	
Revolutions	–		
Code	Pure binary		Gray
Elec. permissible speed Deviations[1)]	≤ 15 000 rpm for continuous position value	512 lines: ≤ 5000/12 000 rpm ±1 LSB/±100 LSB 2048 lines: ≤ 1500/12 000 rpm ±1 LSB/±50 LSB	12 000 rpm ±12 LSB
Calculation time t_{cal} Clock frequency	≤ 7 µs ≤ 8 MHz	≤ 9 µs ≤ 2 MHz	≤ 5 µs –
Incremental signals	Without	∿ 1 V_{PP}[2)]	
Line counts*	–	**512** 2048	512
Cutoff frequency –3 dB	–	512 lines: ≥ 130 kHz; 2048 lines: ≥ 400 kHz	
System accuracy	±20″	512 lines: ±60″; 2048 lines: ±20″	
Electrical connection*	• **M12 flange socket**, radial • Cable (1 m) with M12 coupling	• **M23 flange socket**, axial, or radial • Cable (1 m/5 m) with or without M23 coupling	
Supply voltage	DC 3.6 V to 14 V	DC 3.6 V to 14 V	DC 4.75 V to 30 V
Power consumption (maximum)	3.6 V: ≤ 0.6 W 14 V: ≤ 0.7 W		4.75 V: ≤ 0.6 W 30 V: ≤ 0.78 W
Current consumption (typical, without load)	5 V: 80 mA		5 V: 70 mA 24 V: 20 mA
Shaft	Solid shaft (∅ 6 mm)		
Mech. permiss. speed	≤ 15 000 rpm		
Starting torque (typical)	0.01 Nm (at 20 °C) (at IP66: 0.025 Nm)		
Moment of inertia of rotor	≤ 2.7 · 10^{-6} kgm^2		
Shaft load	Axial: ≤ 40 N; radial: ≤ 60 N at shaft end (see also "Mechanical design types and mounting")		
Vibration: 55 Hz to 2000 Hz **Shock:** 6 ms	≤ 300 m/s^2 (EN 60068-2-6) ROC/ROQ: ≤ 2000 m/s^2; RIC/RIQ: ≤ 1000 m/s^2 (EN 60068-2-27)		
Max. operating temp.[3)]	100 °C		
Min. operating temp.	Flange socket or fixed cable: –40 °C; moving cable: –10 °C		
Protection EN 60529	IP67 at housing; IP64 at shaft inlet (IP66 upon request)		
Mass	≈ 0.35 kg		
Valid for ID	1322268-xx[4)]	1109254-xx	1353113-xx

Bold: This preferred version is available on short notice.
* Please select when ordering
[1)] Speed-dependent deviations between absolute value and incremental signal

Automation and Metrology
1-888-354-2525 | sales@auto-met.com | auto-met.com
Specifications | May 2026 catalog | ROC ROQ 400

	Multiturn ROQ 437 Functional Safety	ROQ 425	
	EnDat 2.2	EnDat 2.2	SSI
	EnDat22	EnDat01	SSI41r1
	33554432 (25 bits)	8192 (13 bits)	8192 (13 bits)
	4096		
	Pure binary		Gray
	≤ 15000 rpm for continuous position value	512 lines: ≤ 5000/10000 rpm ±1 LSB/±100 LSB 2048 lines: ≤ 1500/10000 rpm ±1 LSB/±50 LSB	12000 rpm ±12 LSB
	≤ 7 µs ≤ 8 MHz	≤ 9 µs ≤ 2 MHz	≤ 5 µs –
	Without	∿ 1 V_{PP}[2]	
	–	**512** 2048	512
	–	512 lines: ≥ 130 kHz; 2048 lines: ≥ 400 kHz	
	±20″	512 lines: ±60″; 2048 lines: ±20″	
	• **M12 flange socket**, radial • Cable (1 m) with M12 coupling	• **M23 flange socket**, axial, or radial • Cable (1 m/5 m) with or without M23 coupling	
	DC 3.6 V to 14 V	DC 3.6 V to 14 V	DC 4.75 V to 30 V
	3.6 V: ≤ 0.7 W 14 V: ≤ 0.8 W		4.75 V: ≤ 0.68 W 30 V: ≤ 0.88 W
	5 V: 95 mA		5 V: 85 mA 24 V: 20 mA
	≤ 12000 rpm		
	1322273-xx[4]	1109256-xx	1353117-xx

[2] Limited tolerances: signal amplitude: 0.8 V_{PP} to 1.2 V_{PP}
[3] For the relationship of operating temperature to shaft speed and supply voltage, see "General mechanical information"
[4] Also available with functional safety; for dimensions and specifications, see Product Information document

ROC/ROQ/ROD 400 series

Absolute and incremental rotary encoders
- **Clamping flange**
- **Solid shaft for separate shaft coupling**

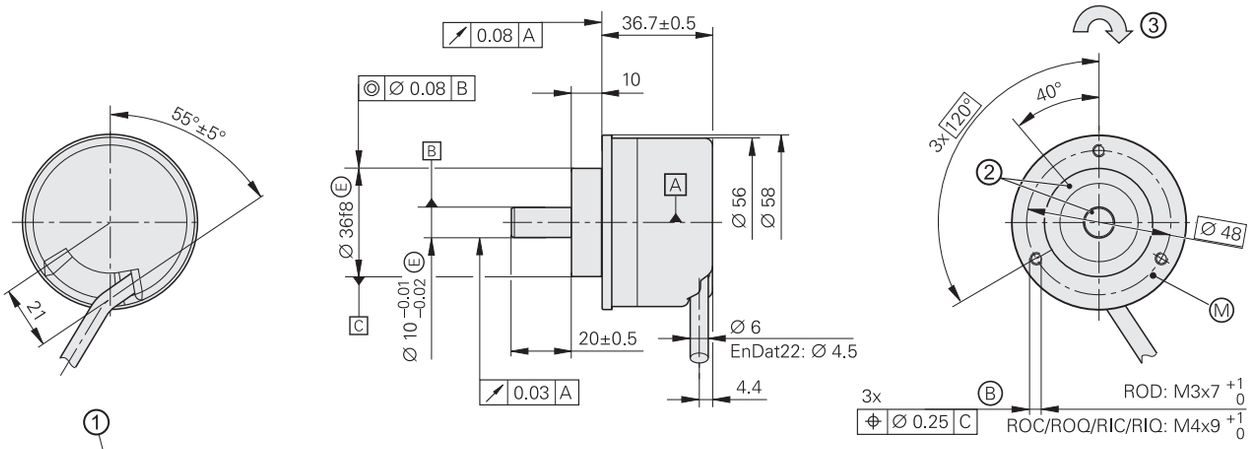

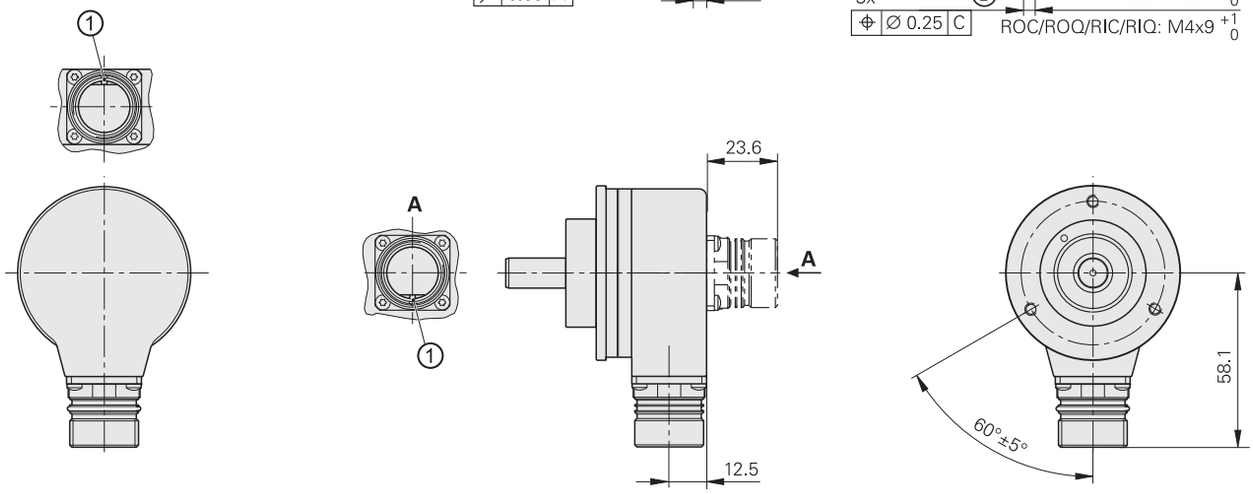

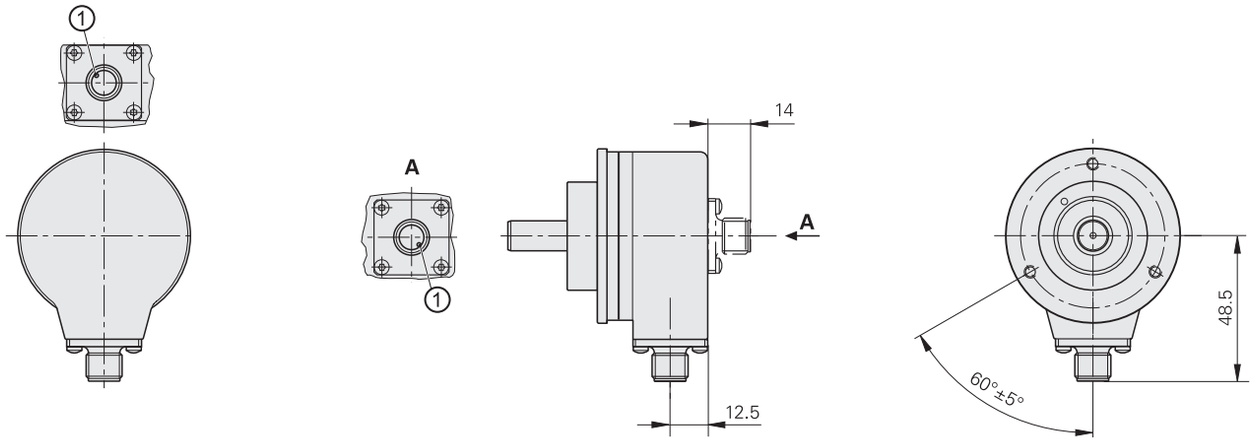

mm
Tolerancing ISO 8015
ISO 2768:1989-mH
≤ 6 mm: ±0.2 mm

Radial cable (can also be used axially)
- A = Bearing
- B = Fastening thread
- M = Measuring point for operating temperature
- 1 = Connector coding
- 2 = ROD reference mark position for shaft and flange ±15°
- 3 = Incremental rotary encoders: direction of shaft rotation for output signals as per interface description
  Absolute rotary encoders: direction of shaft rotation for ascending position values

Automation and Metrology
1-888-354-2525 | sales@auto-met.com | auto-met.com
Specifications | May 2026 catalog | ROC ROQ 400

	Absolute **Singleturn** **ROC 425** Functional Safety	**ROC 413**	
Interface*	EnDat 2.2	EnDat 2.2	SSI
Ordering designation	EnDat22	EnDat01	SSI39r1
Positions/revolution	33 554 432 (25 bits)	8192 (13 bits)	
Revolutions	–		
Code	Pure binary		Gray
Elec. permissible speed Deviations[1)]	≤ 15 000 rpm for continuous position value	512 lines: ≤ 5000/12 000 rpm ±1 LSB/±100 LSB 2048 lines: ≤ 1500/12 000 rpm ±1 LSB/±50 LSB	12 000 rpm ±12 LSB
Calculation time t_{cal} Clock frequency	≤ 7 µs ≤ 8 MHz	≤ 9 µs ≤ 2 MHz	≤ 5 µs –
Incremental signals	Without	∿ 1 V_{PP}[2)]	
Line counts*	–	**512** 2048	512
Cutoff frequency –3 dB	–	512 lines: ≥ 130 kHz; 2048 lines: ≥ 400 kHz	
System accuracy[1)]	±20″	512 lines: ±60″; 2048 lines: ±20″	
Electrical connection*	• **M12 flange socket**, radial • Cable (1 m) with M12 coupling	• **M23 flange socket**, axial, or radial • Cable (1 m/5 m) with or without M23 coupling	
Supply voltage	DC 3.6 V to 14 V	DC 3.6 V to 14 V	DC 4.75 V to 30 V
Power consumption (maximum)	3.6 V: ≤ 0.6 W 14 V: ≤ 0.7 W		4.75 V: ≤ 0.6 W 30 V: ≤ 0.78 W
Current consumption (typical, without load)	5 V: 80 mA		5 V: 70 mA 24 V: 20 mA
Shaft	Stub shaft ∅ 10 mm		
Mech. permiss. speed	≤ 15 000 rpm		
Starting torque (typical)	0.01 Nm (at 20 °C) (at IP66: 0.025 Nm)		
Moment of inertia of rotor	≤ 2.3 · 10^{-6} kgm^2		
Shaft load	Axial: ≤ 40 N; radial: ≤ 60 N at shaft end (see also "Mechanical design types and mounting")		
Vibration: 55 Hz to 2000 Hz **Shock:** 6 ms	≤ 300 m/s^2; (EN 60068-2-6); higher values upon request ROC/ROQ: ≤ 2000 m/s^2; RIC/RIQ: ≤ 1000 m/s^2 (EN 60068-2-27)		
Max. operating temp.[3)]	100 °C		
Min. operating temp.	Flange socket or fixed cable: –40 °C; moving cable: –10 °C		
Protection EN 60529	IP67 at housing; IP64 at shaft inlet (IP66 upon request)		
Mass	≈ 0.35 kg		
Valid for ID	1322269-xx[4)]	1109255-xx	1353114-xx

Bold: This preferred version is available on short notice.
* Please select when ordering
[1)] Speed-dependent deviations between absolute value and incremental signal

Automation and Metrology
1-888-354-2525 | sales@auto-met.com | auto-met.com
Specifications | May 2026 catalog | ROC ROQ 400

	Multiturn ROQ 437 Functional Safety	ROQ 425	
	EnDat 2.2	EnDat 2.2	SSI
	EnDat22	EnDat01	SSI41r1
	33 554 432 (25 bits)	8192 (13 bits)	
	4096		
	Pure binary		Gray
	≤ 15 000 rpm for continuous position value	512 lines: ≤ 5000/10 000 rpm ±1 LSB/±100 LSB 2048 lines: ≤ 1500/10 000 rpm ±1 LSB/±50 LSB	12 000 rpm ±12 LSB
	≤ 7 µs ≤ 8 MHz	≤ 9 µs ≤ 2 MHz	≤ 5 µs –
	Without	∿ 1 V_{PP}[2]	
	–	**512** 2048	512
	–	512 lines: ≥ 130 kHz; 2048 lines: ≥ 400 kHz	
	±20″	512 lines: ±60″; 2048 lines: ±20″	
	• **M12 flange socket**, radial • Cable (1 m) with M12 coupling	• **M23 flange socket**, axial, or radial • Cable (1 m/5 m) with or without M23 coupling	
	DC 3.6 V to 14 V	DC 3.6 V to 14 V	DC 4.75 V to 30 V
	3.6 V: ≤ 0.7 W 14 V: ≤ 0.8 W		4.75 V: ≤ 0.68 W 30 V: ≤ 0.88 W
	5 V: 95 mA		5 V: 85 mA 24 V: 20 mA
	≤ 12 000 rpm		
	1322274-xx[4]	1109257-xx	1353118-xx

[2] Limited tolerances: signal amplitude: 0.8 V_{PP} to 1.2 V_{PP}
[3] For the relationship of operating temperature to shaft speed and supply voltage, see "General mechanical information"
[4] Also available with functional safety; for dimensions and specifications, see Product Information document

AMI
Automation and Metrology
1-888-354-2525 | sales@auto-met.com | auto-met.com
Specifications | May 2026 catalog | ROC ROQ 400

General mechanical information

Certification by an NRTL (Nationally Recognized Testing Laboratory)
All rotary encoders in this brochure comply with the UL safety regulations for the U.S. and the "CSA" safety regulations for Canada.

Accelerations
During mounting and operation, encoders are subjected to various types of acceleration.

- **Vibration**
  The encoders are qualified on a test stand under the acceleration values stated in the specifications at frequencies of 55 Hz to 2000 Hz in accordance with EN 60068-2-6. However, if the application or mounting situation causes long-duration resonant vibration, then proper functioning of the encoder may be impaired, or the encoder may incur damage. **Thorough testing of the complete system is therefore required.**
- **Shock**
  The encoders are qualified on a test stand under the acceleration values stated in the specifications and under the exposure times in accordance with EN 60068-2-27 for non-repetitive, semi-sinusoidal shock. **Continuous shock loads** are therefore not covered and **must be tested in the application.**
- The **maximum angular acceleration** is 10^5 rad/s^2. This is the highest permissible rotational acceleration at which the rotor can be accelerated without damage to the encoder. The actual attainable angular acceleration is within the same order of magnitude but can vary depending on the type of shaft connection (for deviating values for the ECN/ERN 100, see the *Specifications*). An adequate safety factor must be determined through system tests.

Deviating values for rotary encoders with functional safety are provided in the corresponding Product Information documents.

Air humidity
The max. permissible relative humidity is 75%. A relative humidity of 93% is temporarily permissible. Condensation is not permissible.

Magnetic fields
Magnetic fields greater than 30 mT can affect proper encoder functioning. Please contact HEIDENHAIN in Traunreut, Germany, as needed.

Natural frequencies
With the ROC/ROQ/ROD rotary encoders, the rotor and the shaft coupling together form an oscillation-capable spring-mass system. In the case of the ECN/EQN/ERN, this applies to the stator and stator coupling.

The **natural frequency f_N** should be as high as possible. In order for the highest possible natural frequency to be attained with the **ROC/ROQ/ROD rotary encoders**, a diaphragm coupling with a high torsional rigidity C must be used (see "Shaft couplings").

$$f_N = \frac{1}{2 \times \pi} \cdot \sqrt{\frac{C}{I}}$$

f_N: Natural frequency of the coupling in Hz
C: Torsional rigidity of the coupling in Nm/rad
I: Moment of inertia of the rotor in kgm^2

In conjunction with the stator coupling, the **ECN/EQN/ERN** rotary encoders form an oscillation-capable spring-mass system whose **natural frequency f_N** of the coupling in the direction of measurement should be as high as possible. The natural frequency of the coupling is influenced by the rigidity of the stator coupling and by the customer-side mounting situation. The stated typical natural frequencies may vary depending on the encoder variant (e.g., singleturn or multiturn), the production tolerances, and the mounting conditions. If radial and/or axial acceleration forces also come into play, then the rigidity of the encoder bearing and of the encoder stator has an effect as well. If such loads occur within your application, HEIDENHAIN recommends consulting with the main facility in Traunreut.

HEIDENHAIN generally recommends determining the natural frequency of the stator coupling within the complete system.

Strain relief
Provide strain relief for the rotary encoder cable.

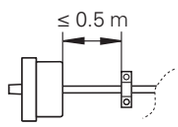

Starting torque and operating torque
The starting torque is the torque required to put the rotor into motion from standstill. If the rotor is already rotating, then a certain operating torque is acting on the encoder. The starting torque and operating torque are influenced by various factors, such as the temperature, prior standstill time and the amount of wear on the bearing and seal.

The typical values stated in the specifications are mean values based on encoder-specific test series performed at room temperature and at a stabilized operating temperature. The typical operating torques are also based on constant shaft speeds. For applications in which the torque has a significant influence, HEIDENHAIN recommends consulting with the main office in Traunreut.

Protection from contact (EN 60529)
After installation of the encoder, all rotating parts must be protected from accidental contact during operation.

Protection (EN 60529)
The ingress of contamination can impair proper functioning of the encoder. Unless otherwise indicated, all of the rotary encoders have an IP64 rating (ExN/ROx 400: IP67) in accordance with EN 60529. These specifications apply to the housing, cable outlet, and flange socket versions when engaged.

The **shaft inlet** meets an IP64 rating. Splash water must not contain any substances that would have harmful effects on the encoder's parts. If the protection rating of the shaft inlet is not sufficient (e.g., due to vertical mounting of the encoder), then the encoders should be additionally protected with labyrinth seals. Many rotary encoders are also available with an IP66 rating for the shaft inlet. Depending on the application, the radial shaft seal rings used for sealing are subjected to wear due to friction.

Acoustic noise
Running noise can occur during operation. This is particularly true of encoders with an integral bearing and of multiturn rotary encoders (with gears). The intensity may vary depending on the mounting situation and shaft speed.

Automation and Metrology
1-888-354-2525 | sales@auto-met.com | auto-met.com
Specifications | May 2026 catalog | ROC ROQ 400

System tests
Encoders from HEIDENHAIN are usually integrated as components into complete systems. Applications of this type require full-system, **comprehensive testing**, regardless of the encoder's specifications. The specifications provided in this brochure apply only to the encoder and not to the complete system. Any operation of the encoder outside of the specified range or outside of its proper and intended use is solely at the user's own risk.

Mounting
Only the work steps and dimensions in the mounting instructions available for the encoder are to be followed during mounting. All mounting-related information in this brochure is therefore only provisional and non-binding, and will not become the subject matter of a contract.

In addition, the machine manufacturer must define the other required final mounting information for the given application (e.g., tightening torque, mechanical fault exclusion for screws needed or not). The stated tolerance ranges in the product's dimension drawing and mounting instructions must also be considered.

Conditions for storage
The specified parameters of the individual products are based on the assumption that steel is used for the mating shaft and that aluminum is used for the mating surface for the stator coupling or stator and that this steel and aluminum have the properties stated in the table below. Any deviations from the information in this table are stated on the respective product page or in separately available Product Information documents. The following material properties and conditions for mounting by the customer are also assumed for the fault exclusion design for functional safety:

	Aluminum	**Steel**
Material	Hardenable wrought aluminum alloy	Unalloyed hardened steel
Tensile strength R_m	≥ 220 N/mm^2	≥ 600 N/mm^2
Yield strength $R_{p0.2}$ or yield point R_e	Not relevant	≥ 400 N/mm^2
Shear strength τ_a	≥ 130 N/mm^2	≥ 390 N/mm^2
Interface pressure p_G	≥ 250 N/mm^2	≥ 660 N/mm^2
Modulus of elasticity E (at 20 °C)	70 kN/mm^2 to 75 kN/mm^2	200 kN/mm^2 to 215 kN/mm^2
Coefficient of thermal expansion α_{therm} (at 20 °C)	≤ 25 · 10^{-6} K^{-1}	10 · 10^{-6} K^{-1} to 17 · 10^{-6} K^{-1}
Surface roughness Rz	≤ 16 µm	
Friction values	Mounting surfaces must be clean and free of grease. Screws and washers are assumed to be in the same condition as delivered.	
Tightening procedure	Use a signal-emitting torque wrench in accordance with DIN EN ISO 6789, with an accuracy of ±6%	
Mounting temperature	15 °C to 35 °C	

Modifications to the encoder
The proper functioning and accuracy of encoders from HEIDENHAIN are ensured only if the encoders have not been modified. Any modification, even a minor one, can impair the proper functioning, reliability and safety of the encoders, and result in a loss of warranty. This also includes the use of any additional or non-prescribed locking varnishes, lubricants (e.g., for screws), or adhesives. If you are in doubt, we recommend that you consult with HEIDENHAIN in Traunreut, Germany.

Rotary encoders with functional safety may exert a torque of up to 1 Nm on the mating shaft. In addition, other forces and torques (e.g., from vibrational loads and angular acceleration) must be taken into account. The customer's mechanical elements must be designed for these loads (see also EN 61800-5-2 and EN ISO 13849). The respective Product information documents will describe any other requirements.

Supplementary information:
For rotary encoders of the ECN/EQN/ERN 4xx/13xx series with a hollow shaft, a maximum of 2 Nm is permissible for an operating temperature range of –30 °C to –40 °C.

Screws with material bonding anti-rotation lock
Mounting screws and central screws from HEIDENHAIN (not included in delivery) feature a coating that, after hardening, provides a material bonding anti-rotation lock. As a result, these screws cannot be reused. Their minimum shelf life is two years (storage at ≤ 30 °C and ≤ 65% relative humidity). Their expiration date is printed on the package.

If a replacement becomes necessary, recut the threads and use new screws. On threaded holes, a chamfer is required in order to keep the adhesive coating from being scraped off.

Screw insertion and the application of tightening torque must therefore be completed within five minutes. The required strength is reached at room temperature after six hours. The lower the temperature, the longer the curing process will take. Curing temperatures below 5 °C are not permissible.

Automation and Metrology
1-888-354-2525 | sales@auto-met.com | auto-met.com
Specifications | May 2026 catalog | ROC ROQ 400

Conditions for longer storage periods
HEIDENHAIN recommends the following in order to make storage periods of at least 12 months possible:

- Leave the encoders in their original packaging
- The storage location should be dry, free of dust and temperature-regulated. It should also be free of vibration, mechanical shock and chemical environmental influences
- Every twelve months, rotate the shafts of the encoders with integral bearing at low speed and without axial or radial shaft loading so that the bearing lubrication becomes evenly redistributed (e.g., such as when first breaking in an encoder)

Parts subject to wear
Encoders from HEIDENHAIN are designed for a long service life. Preventive maintenance is not required. However, they do contain components that are subject to wear depending on the application and how they are deployed. This especially applies to cables that are subject to frequent flexing.

Other parts subject to wear are the bearings in encoders with integral bearing, the radial shaft seal rings in rotary encoders and angle encoders, and the sealing lips on sealed linear encoders.

In order to avoid damage from current flows, some rotary encoders are available with hybrid bearings. In general, these bearings exhibit greater wear at high temperatures than standard bearings.

Service life
Unless otherwise specified, HEIDENHAIN encoders are designed for a service life of 20 years, which is equivalent to 40 000 operating hours under typical operating conditions. The encoders' service life may be limited by the bearing service life, depending on the application.

Starting at a continuous use temperature of 75 °C, the service life may be limited by the service life of the grease. Please contact HEIDENHAIN if you have any questions about the service life of the grease.

Temperature ranges
For an encoder in its packaging, the applicable **storage temperature range** is –30 °C to 65 °C. The **operating temperature range** specifies the temperature of the rotary encoder that is permissible during operation under actual installation conditions. Within this range, proper functioning of the rotary encoder is ensured. The operating temperature is measured at the defined measuring point (see dimension drawing) and must not be confused with the ambient temperature.

The temperature of the rotary encoder is influenced by the following factors:

- The mounting conditions
- The ambient temperature
- The encoder's susceptibility to self-heating

An encoder's susceptibility to self-heating depends both on its design characteristics (stator coupling / solid shaft, shaft sealing ring, etc.) and on its operating parameters (shaft speed, supply voltage). A temporary period of heightened self-heating can also occur after very long breaks in operation (of several months). Please allow for a two-minute break-in period at low shaft speeds. The greater susceptibility to self-heating that an encoder exhibits, the lower the ambient temperature needs to be in order to keep the encoder within its permissible operating temperature range.

This table shows the approximate self-heating values to be expected for the rotary encoders. In the worst case, the amount of self-heating may be affected by multiple operating parameters, such as a 30 V supply voltage and maximum shaft speed. Thus, if an encoder is being operated close to its maximum permissible specifications, then the actual operating temperature should be measured directly at the encoder. Suitable measures must then be taken (fan, heat sinks, etc.) to sufficiently reduce the ambient temperature so that the maximum permissible operating temperature will not be exceeded during continuous operation.

For high shaft speeds at the maximum permissible ambient temperature, special versions with a reduced protection rating are available (without a radial shaft seal ring and its concomitant frictional heat).

Self-heating at shaft speed n_{max}	
ECN/EQN/ERN 1000	≈ +10 K
ROC/ROQ/ROD Solid shaft	≈ + 5 K With IP66 rating: ≈ +10 K
ECN/EQN/ERN 400/1300 Tapered shaft	≈ + 5 K With IP66 rating: ≈ +10 K
ECN/EQN/ERN 400/1300 Blind hollow shaft	≈ +30 K With IP66 rating: ≈ +40 K
ECN/EQN/ERN 400 Hollow through shaft	≈ +40 K With IP66 rating: ≈ +50 K
ECN/ERN 100 Hollow through shaft	≈ +40 K With IP64 rating: ≈ +50 K
ROD 600	≈ +75 K
ROD 1900	≈ +40 K

Typical self-heating values of a rotary encoder at maximum permissible shaft speed based on its design characteristics. The relationship between shaft speed and heat generation is nearly linear.

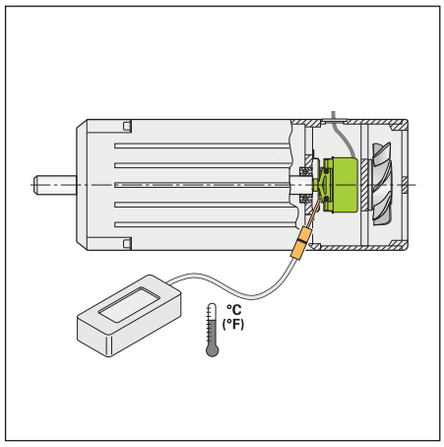

Measuring of the actual operating temperature at the defined measuring point of the rotary encoder (see "Specifications")

Automation and Metrology
1-888-354-2525 | sales@auto-met.com | auto-met.com
Specifications | May 2026 catalog | ROC ROQ 400

Electrical resistance

Encoders with an integral bearing and onnector
Check the electrical resistance between the cable gland and the rotor or between the flange socket and the rotor.

Nominal value: < 1 ohm

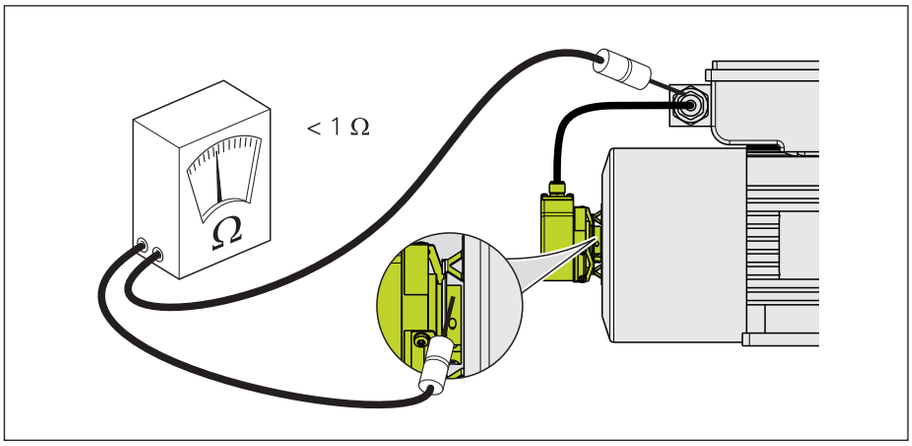

Encoders with an integral bearing and a built-in output cable
Check the electrical resistance between the cable gland and the rotor or between the flange socket and the rotor.

Nominal value: < 1 ohm

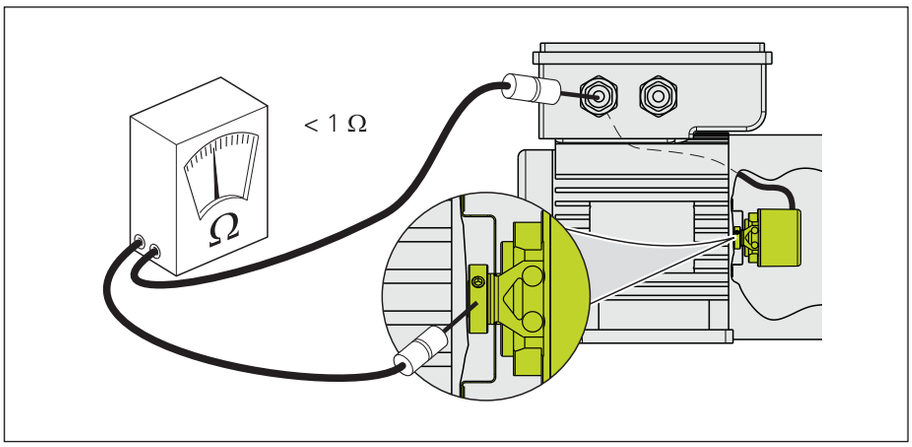

Further information:

Please take into account the information about electromagnetic compatibility under "General electrical information" in the *Interfaces of HEIDENHAIN Encoders* brochure.

Automation and Metrology
1-888-354-2525 | sales@auto-met.com | auto-met.com
Specifications | May 2026 catalog | ROC ROQ 400