HEIDENHAIN

Length Gauges

05/2021

AMI
Automation and Metrology
8808 Tyler Blvd, Mentor, OH 44060
1-888-354-2525 | sales@auto-met.com
Request a quote: auto-met.com

Length gauges from HEIDENHAIN provide high accuracy over long measuring ranges. They are also robust and practical. They can be used in a wide range of applications, including production metrology, multi-gauging fixtures, measuring equipment monitoring, and position measurement.

This brochure supersedes all previous editions, which thereby become invalid. The basis for ordering from HEIDENHAIN is always the brochure edition valid when the order is placed.

Standards (ISO, EN, etc.) apply only where explicitly stated in the brochure.

Further information:

For detailed descriptions of all available interfaces, cables, and connecting elements, as well as general electrical information, please refer to the *Interfaces of HEIDENHAIN Encoders* and the *Cables and Connectors* brochures.

Contents

Length gauges: applications and products				
	Areas of application			**4**
	Length gauges from HEIDENHAIN			**6**
	Overview of length gauges			**8**
Technical features and mounting information				
	Measuring principles			**10**
	Measuring accuracy			**12**
	Mounting			**16**
	Setup			**17**
	Gauging force and plunger actuation			**19**
Specifications		*Accuracy*	*Measuring range*	
	Absolute length gauges	**HEIDENHAIN-ACANTO**	±1 µm ±2 µm	12 mm 30 mm	**22**
	Incremental length gauges	**HEIDENHAIN-CERTO**	±0.1 µm; ±0.03 µm* ±0.1 µm; ±0.05 µm*	25 mm 60 mm	**24**
		HEIDENHAIN-METRO	±0.2 µm	12 mm 25 mm	**26**
		HEIDENHAIN-METRO	±0.5 µm ±1 µm	60 mm 100 mm	**28**
		HEIDENHAIN-SPECTO	±1 µm	12 mm 30 mm	**30**
		Length gauges with low measuring forces	±0.2 µm ±1 µm	12 mm	**32**
Accessories				
	Measuring contacts, switch boxes, coupling			**34**
	Gauge stands, ceramic suction plate, diaphragm compressor	For HEIDENHAIN-CERTO		**36**
	Cable release and gauge stands	For HEIDENHAIN-ACANTO, HEIDENHAIN-METRO, and HEIDENHAIN-SPECTO		**38**
Further information				
	Signal converters			**40**
	Calibration according to DAkkS			**42**
	Related documents			**43**

* After linear length-error compensation in the evaluation electronics

Areas of application

In quality assurance

Metrology and production control

Length gauges from HEIDENHAIN play a role in incoming goods inspection, fast dimension checking during production, statistical process control in production or quality assurance, or in any application where fast, reliable and accurate length measurement is required. Their large measuring lengths are a particular advantage: whether the part measures 5 mm or 95 mm, it is measured immediately with one and the same length gauge.

Whatever the application, HEIDENHAIN has the appropriate length gauge for the required accuracy. The **HEIDENHAIN-CERTO** length gauges offer a very high accuracy of ±0.1 µm/±0.05 µm*/±0.03 µm* for extremely precise measurement. Length gauges from the **HEIDENHAIN-METRO** program have accuracy grades as fine as ±0.2 µm, while the **HEIDENHAIN-SPECTO** length gauges, with ±1 µm accuracy, offer particularly compact dimensions.

* After linear length-error compensation in the evaluation electronics

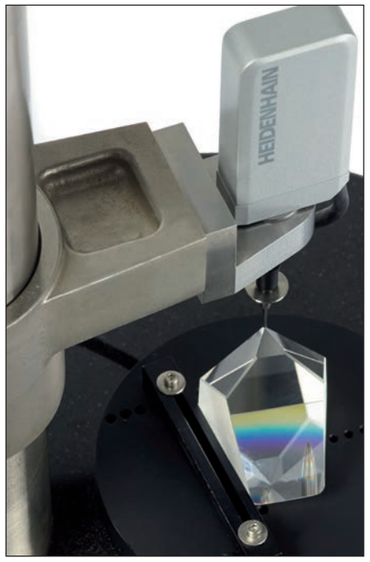

Workpiece inspection

Inspection of styli

Gauge block calibration and measuring device inspection

The regular inspection of measuring equipment called for by standards, and the inspection of gauge blocks in particular, necessitate a large number of reference standard blocks if the comparative measurement is performed using inductive gauges. The problem is the small measuring range of inductive gauges: they can measure length differences of only up to 10 µm. Length gauges, which offer large measuring ranges together with high accuracy, greatly simplify the calibration of measuring devices required to ensure traceability.

The length gauges of the **HEIDENHAIN-CERTO** product portfolio with measuring ranges of 25 mm with ±0.1 µm/±0.03 µm* accuracy and 60 mm with ±0.1 µm/ ±0.05 µm* accuracy are especially well suited for this task. They permit a significant reduction in the required number of reference standard blocks, and recalibrating becomes much simpler.

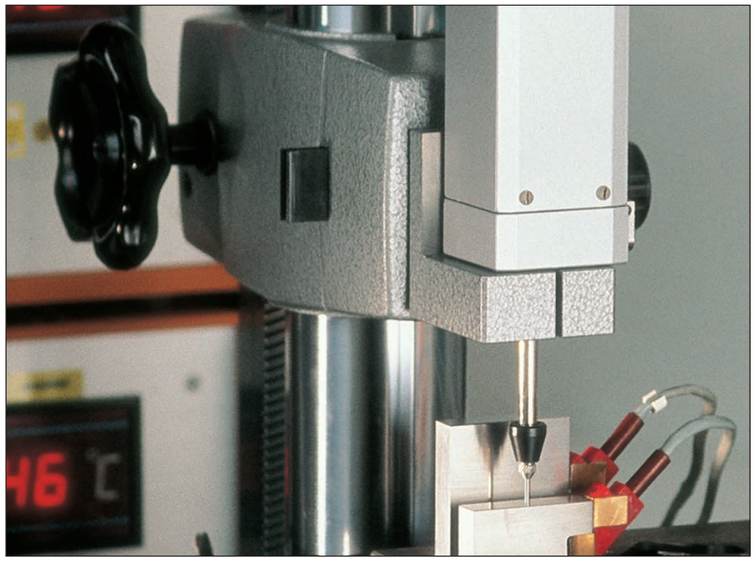
Calibration of gauge blocks

In production metrology

Multi-gauging fixtures

Multi-gauging fixtures require durable length gauges with small dimensions. They should also have relatively large measuring ranges of several millimeters with consistent linear accuracy in order to simplify the construction of inspection devices—for example by enabling the construction of one device for several masters. A large measuring length also provides benefits in master production, because simpler masters can be used.

Thanks to their small dimensions, the **HEIDENHAIN-ACANTO** absolute length gauges, like the **HEIDENHAIN-SPECTO** incremental length gauges, are specially designed for multi-gauging fixtures. They feature accuracy grades of down to ±1 µm over measuring ranges up to 30 mm. More stringent accuracy requirements of down to ±0.2 µm can be met with similarly compact **HEIDENHAIN-METRO** length gauges.

Unlike inductive gauges, HEIDENHAIN length gauges provide stable measurement over long periods—eliminating recalibration.

Testing station for flatness inspection

Tolerance gauging of semifinished products

Position measurement

Length gauges from HEIDENHAIN are also ideal for position measurement on precision linear slides and X-Y tables. Working with measuring microscopes, for example, becomes much easier thanks to the digital readout and the flexible datum setting.

Here, length gauges from the **HEIDENHAIN-METRO** and **HEIDENHAIN-SPECTO** program come into use with large measuring ranges of 30 mm, 60 mm or 100 mm at consistently high accuracy grades of ±0.5 µm or ±1 µm.

In this application as a linear measuring device, the length gauge's fast installation in accordance with the Abbe measuring principle by its clamping shank or plane mounting surface is of special benefit.

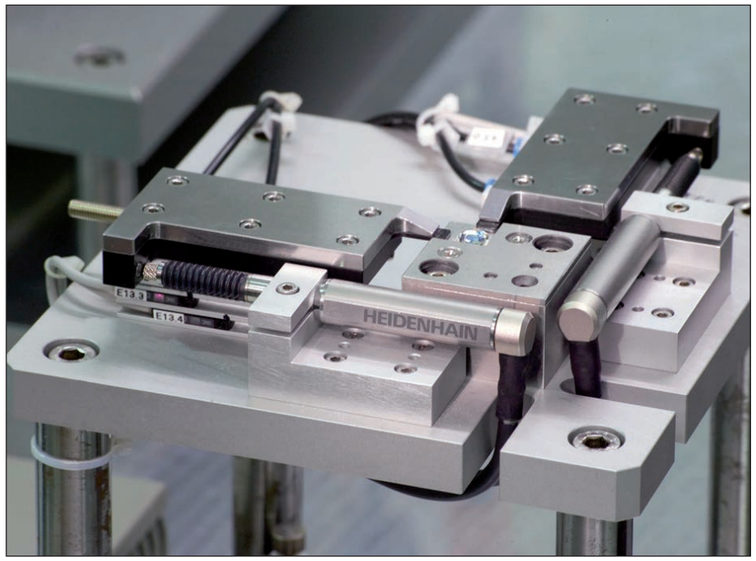

Position measurement on an X-Y table for lens mounting

Length gauges from HEIDENHAIN

Length gauges from HEIDENHAIN feature high accuracy over long measuring ranges. These sensors are used whenever lengths need to be measured with speed, reliability, and accuracy.

Long measuring ranges

HEIDENHAIN length gauges are available for measuring ranges of 12 mm, 25 mm, 30 mm, 60 mm, or 100 mm. This lets you measure a wide variety of parts with a single measuring setup without frequently changing cost-intensive gauge blocks or masters.

High accuracy

The high accuracy of HEIDENHAIN length gauges applies over the entire measuring range. Regardless of whether the part measures 10 mm or 100 mm, its actual dimensions are always measured with the same high quality. The high repeatability of HEIDENHAIN length gauges is beneficial during comparative measurements, such as in serial production.

The HEIDENHAIN-CERTO length gauges, in particular, exhibit high accuracy and offer nanometer-level resolution.

Robust design

HEIDENHAIN length gauges are built for an industrial environment. Their long-term consistent accuracy and high thermal stability make them ideal for use in production equipment and machines.

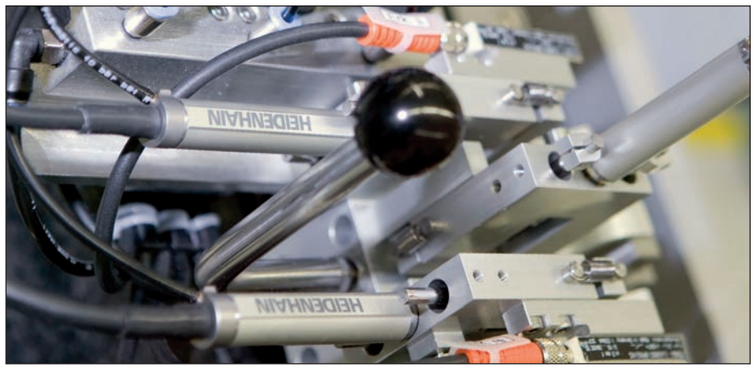

Wide range of applications

HEIDENHAIN length gauges are suited for many applications. Automatic inspection equipment, manual measuring stations or positioning equipment—wherever lengths, spacing, thickness, height, or linear motion are to be measured, HEIDENHAIN length gauges function quickly, reliably, and accurately.

Absolute position measurement

The HEIDENHAIN-ACANTO length gauges operate with absolute measurement over a range of 12 mm or 30 mm and with high repeatability. Their particular advantage is that the measured value is available immediately after switch-on.

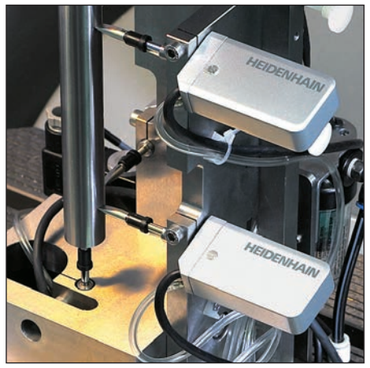

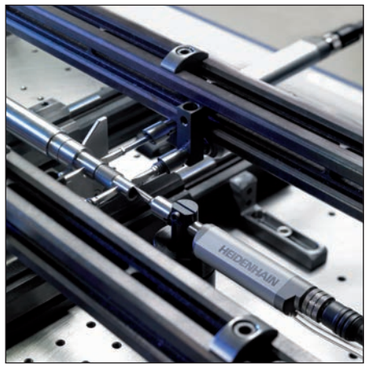

Expertise

The high quality of HEIDENHAIN length gauges is no coincidence. HEIDENHAIN has been manufacturing high-accuracy scales for over 70 years, and for many years it has developed measuring and testing devices for length and angle measurement for national standards laboratories. This know-how makes HEIDENHAIN an extraordinarily qualified partner for metrology questions.

Worldwide presence

HEIDENHAIN is represented in all important industrial countries—in most of them with wholly owned subsidiaries. Sales engineers and service technicians support the user on-site with technical information and servicing in the local language.

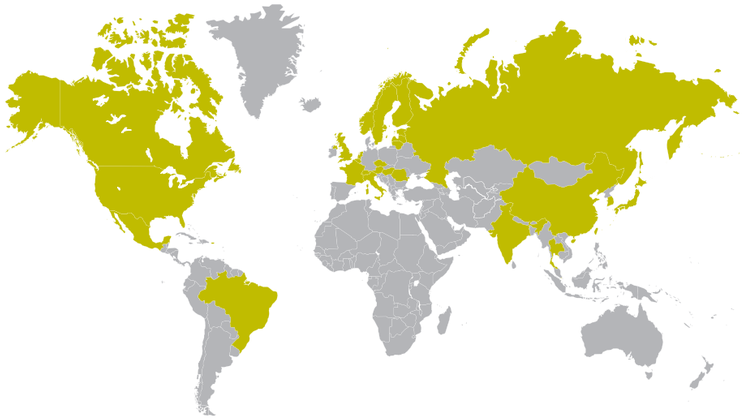

Overview of length gauges

Accuracy	Measuring range *Plunger actuation*	12 mm	25 mm/30 mm	60 mm	100 mm	page
Absolute position measurement						
±1 µm **±2 µm**	**HEIDENHAIN-ACANTO**					**22**
	Via measured object	**AT 1218** EnDat	**AT 3018** EnDat			
	Pneumatically	**AT 1217** EnDat	**AT 3017** EnDat			
Incremental linear measurement						
±0.1 µm **±0.05 µm** *) **±0.03 µm** *)	**HEIDENHAIN-CERTO**					**24**
	Via motor		**CT 2501** ∿ 11 µA$_{PP}$	**CT 6001** ∿ 11 µA$_{PP}$		
	Via external coupling		**CT 2502** ∿ 11 µA$_{PP}$	**CT 6002** ∿ 11 µA$_{PP}$		
±0.2 µm	**HEIDENHAIN-METRO**					**26**
	Via cable release or measured object	**MT 1271** ⊓⊔ TTL **MT 1281** ∿ 1 V$_{PP}$	**MT 2571** ⊓⊔ TTL **MT 2581** ∿ 1 V$_{PP}$			
	Pneumatically	**MT 1287** ∿ 1 V$_{PP}$	**MT 2587** ∿ 1 V$_{PP}$			
±0.5 µm **±1 µm**	**HEIDENHAIN-METRO**					**28**
	Via motor			**MT 60 M** ∿ 11 µA$_{PP}$	**MT 101 M** ∿ 11 µA$_{PP}$	
	Via external coupling			**MT 60 K** ∿ 11 µA$_{PP}$	**MT 101 K** ∿ 11 µA$_{PP}$	
±1 µm	**HEIDENHAIN-SPECTO**					**30**
	Via measured object	**ST 1278** ⊓⊔ TTL **ST 1288** ∿ 1 V$_{PP}$	**ST 3078** ⊓⊔ TTL **ST 3088** ∿ 1 V$_{PP}$			
	Pneumatically	**ST 1277** ⊓⊔ TTL **ST 1287** ∿ 1 V$_{PP}$	**ST 3077** ⊓⊔ TTL **ST 3087** ∿ 1 V$_{PP}$			

*) After linear length-error compensation in the evaluation electronics

MT 101

MT 60

CT 6000

CT 2500

MT 2500

MT 1200

ST 3000

ST 1200

AT 3000

AT 1200

Measuring principles

Measuring standard

HEIDENHAIN length gauges are characterized by long measuring ranges and consistently high accuracy. The basis for both is the photoelectrical scanning principle.

HEIDENHAIN length gauges use material measuring standards consisting of absolute or incremental graduations on substrates of glass or glass ceramic. These measuring standards permit large measuring ranges, are insensitive to vibration and shock, and have a defined thermal behavior. Changes in atmospheric pressure or relative humidity have no influence on the accuracy of the measuring standard—which is the prerequisite for the **high long-term stability** of HEIDENHAIN length gauges.

HEIDENHAIN manufactures the precision graduations in specially developed, photolithographic processes.

- AURODUR: matte-etched lines on gold-plated steel tape with typical graduation period of 40 µm
- METALLUR: contamination-tolerant graduation of metal lines on gold, with typical graduation period of 20 µm
- DIADUR: extremely robust chromium lines on glass (typical graduation period of 20 µm) or three-dimensional chromium structures (typical graduation period of 8 µm) on glass
- SUPRADUR phase grating: optically three dimensional, planar structure; particularly tolerant to contamination; typical graduation period of 8 µm and finer
- OPTODUR phase grating: optically three dimensional, planar structure with particularly high reflectance, typical graduation period of 2 µm and finer

Along with these very fine grating periods, these processes permit a high definition and homogeneity of the line edges. Together with the photoelectric scanning method, this high edge definition is a precondition for the high quality of the output signals.

The master graduations are manufactured by HEIDENHAIN on custom-built high-precision dividing engines.

Measurement procedure

With the **incremental measuring method**, the graduation consists of a periodic grating structure. The position information is obtained **by counting** the individual increments (measuring steps) from some point of origin. Since an absolute reference is required to ascertain positions, the measuring standard is provided with an additional track that bears a **reference mark**. The absolute position on the scale, established by the reference mark, is gated with exactly one signal period.

The reference mark must therefore be scanned to establish an absolute reference or to find the last selected datum.

With the **absolute measuring method**, the position value is available from the encoder immediately upon switch-on and can be called at any time by the subsequent electronics. There is no need to move the axes to find the reference position. The absolute position information is read **from the measuring standard**, which is formed from a serial absolute code structure. A separate incremental track is interpolated for the position value and at the same time—depending on the interface version—is used to generate an optional incremental signal.

DIADUR phase grating with approx. 0.25 µm grating height

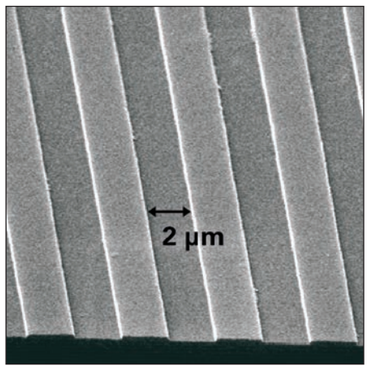

DIADUR graduation

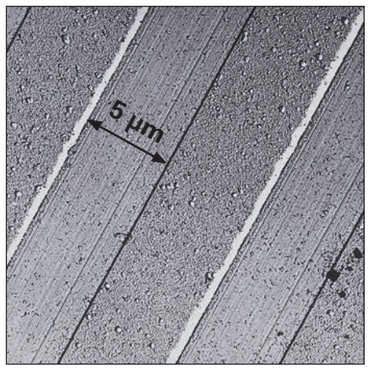

Photoelectric scanning principle

Most HEIDENHAIN encoders operate using the principle of photoelectric scanning. Photoelectric scanning of a measuring standard is contact-free, and as such, free of wear. This method detects even very fine lines, no more than a few micrometers wide, and generates output signals with very small signal periods.

The finer the grating period of a measuring standard is, the greater the effect of diffraction on photoelectric scanning. HEIDENHAIN linear encoders use two scanning principles:

- The **imaging scanning principle** for grating periods of 20 µm and 40 µm
- The **interferential scanning principle** for very fine graduations with grating periods of, for example, 8 µm.

Imaging principle
To put it simply, the imaging scanning principle functions by means of projected-light signal generation: two scale gratings with equal or similar grating periods are moved relative to each other—the scale and the scanning reticle. The carrier material of the scanning reticle is transparent, whereas the graduation on the measuring standard may be applied to a transparent or reflective surface.

When parallel light passes through a grating, light and dark surfaces are projected at a certain distance. An index grating is located here. When the two graduations move in relation to each other, the incident light is modulated: if the gaps are aligned, light passes through. If the lines of one grating coincide with the gaps of the other, no light passes through. A photocell array converts these variations in light intensity into electrical signals. The specially structured grating of the scanning reticle filters the light to generate nearly sinusoidal output signals.

The smaller the period of the grating structure is, the closer and more tightly toleranced the gap must be between the scanning reticle and scale.

The HEIDENHAIN-ACANTO and HEIDENHAIN-SPECTO length gauges, as well as the MT 60 and MT 100 HEIDENHAIN-METRO length gauges, use the imaging principle.

Interferential scanning principle
The interferential scanning principle exploits the diffraction and interference of light on a fine graduation to produce signals used to measure displacement.

A step grating is used as the measuring standard: reflective lines 0.2 µm high are applied to a flat, reflective surface. In front of that is the scanning reticle—a transparent phase grating with the same grating period as the scale.

When a light wave passes through the scanning reticle, it is diffracted into three partial waves of the orders –1, 0, and +1, with approximately equal luminous intensity. The waves are diffracted by the scale such that most of the luminous intensity is found in the reflected diffraction orders +1 and –1. These partial waves meet again at the phase grating of the scanning reticle where they are diffracted again and interfere. This produces essentially three waves that leave the scanning reticle at different angles. Photovoltaic cells convert this alternating light intensity into electrical signals.

A relative motion of the scanning reticle to the scale causes the diffracted wave fronts to undergo a phase shift: When the grating moves by one period, the wave front of the first order is displaced by one wavelength in the positive direction, and the wavelength of diffraction order –1 is displaced by one wavelength in the negative direction. Since the two waves interfere with each other when exiting the grating, the waves are shifted relative to each other by two wavelengths. This results in two signal periods from the relative motion of just one grating period.

Interferential encoders function with grating periods of, for example, 8 µm, 4 µm, and finer. Their scanning signals are largely free of harmonics and can be highly interpolated. These encoders are therefore especially suited for high resolution and high accuracy.

The HEIDENHAIN-CERTO length gauges, as well as the MT 1200 and MT 1500 HEIDENHAIN-METRO length gauges, use the interferential principle.

Imaging principle

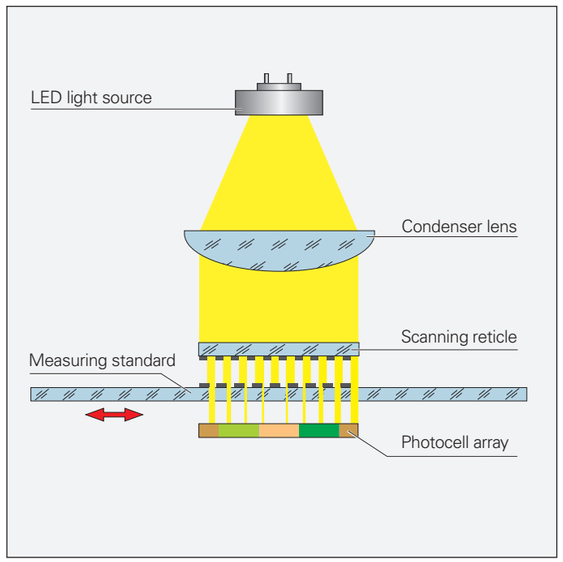

Interferential scanning principle (optics schematics)
C Grating period
ψ Phase shift of the light wave when passing through the scanning reticle
Ω Phase shift of the light wave due to motion X of the scale

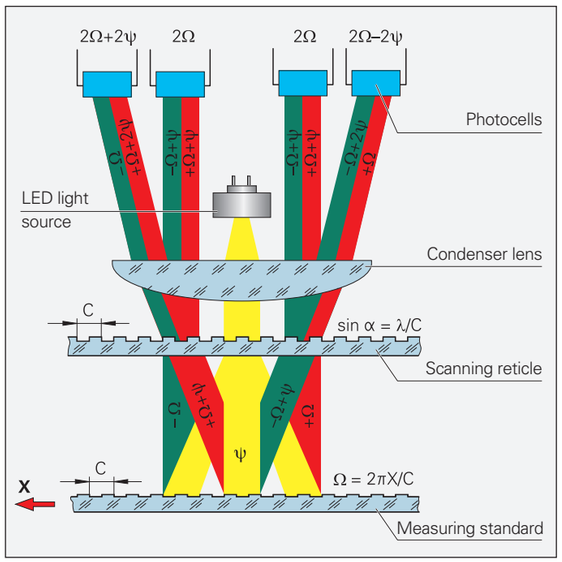

Measuring accuracy

The linear measurement accuracy is mainly determined by the following factors:
- The quality of the graduation
- The scanning quality
- The quality of the signal processing electronics
- The eccentricity of the graduation relative to the bearing
- The guideway error of the scale relative to the scanning unit
- The orthogonality of the length gauge relative to the bearing surface.

These factors can be divided into encoder-specific errors and application-specific factors. For assessment of the attainable **overall accuracy**, all of these individual factors must be taken into account.

Error specific to the measuring device

The error that is specific to the measuring device is stated in the specifications as the **system accuracy**.

*The extreme values of the **total error F** of a position are, on average, within the system accuracy ±a along the entire measuring range. They are measured during final inspection and documented in the calibration chart.*

The system accuracy includes the following:
- The homogeneity and period definition of the graduation
- The alignment of the graduation
- The error of the bearing
- The position error within one signal period.

The Interpolation error within one signal period
The interpolation error within one signal period has an effect even during very small movements and repeated measurements. It is therefore considered separately.

The interpolation error within one signal period ±u results from the scanning quality and, for encoders with integrated pulse-shaping or counter electronics, the quality of the signal-processing electronics. For encoders with sinusoidal output signals, however, the error from the signal processing electronics is dictated by the subsequent electronics.

The following factors influence the outcome:
- The fineness of the signal period
- The homogeneity and period definition of the graduation
- The quality of the scanning filter structures
- The characteristics of the sensors
- The stability and dynamic performance of the analog signal processing

These sources of error must be considered when specifying the interpolation error within one signal period.

The interpolation error within one signal period ±u is specified as a percentage of the signal period. For length gauges, this value is typically better than ±1% of the signal period. You will find the specified values in the Specifications.

Short-range accuracy
The short-range accuracy describes the amount of error that occurs within a distance of ±100 µm from a measuring point and includes electronic and mechanical influences of the gauge on the measurement. The values for short-range accuracy typically lie below the specified values.

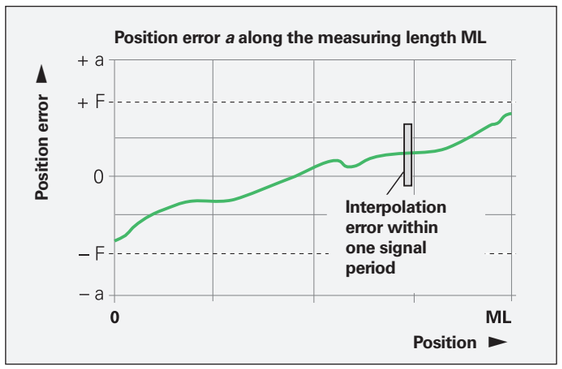

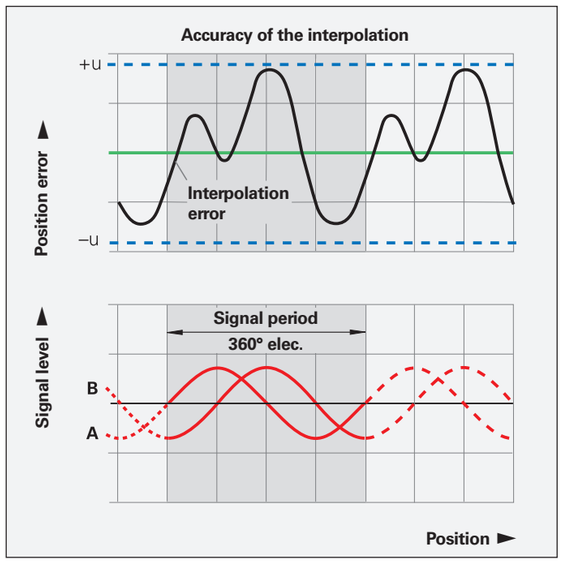

Application-dependent error

Other factors besides the system accuracy also influence the attainable total accuracy of measurement. These include in particular the ambient temperature and temperature fluctuations during measurement as well as a stable, orthogonal measuring setup.

All components included in the **measuring loop,** such as the holder for the measured object, the gauge stand with holder, and the length gauge itself, influence the result of measurement. Expansion or deformation of the measuring setup through mechanical or thermal influences adds directly to the error.

Mechanical design
A stable measuring assembly must be ensured. Long lateral elements within the measuring loop are to be avoided. HEIDENHAIN offers a stable gauge stand as an accessory. The force resulting from the measurement must not cause any measurable deformation of the measuring loop.

Length gauges from HEIDENHAIN operate with small gauging force and have very little influence on the measuring setup.

Orthogonal mounting
The length gauge is to be mounted so that its plunger is exactly orthogonal to the measured object or the surface on which it rests. Deviations result in measuring error.

The accessory HEIDENHAIN gauge stands with holders for an **8 mm clamping shank** ensure orthogonal mounting. Length gauges that provide **planar mounting surfaces** must be set parallel to the mounting surface (Y) and perpendicularly to the measuring plate. A quick and reliable adjustment is possible with the aid of a gauge block or a parallel block. The perpendicularity to the measuring table (X) is already ensured by the gauge stand.

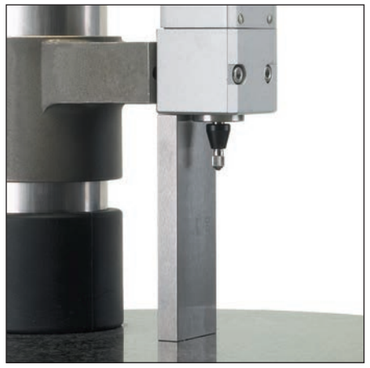

Orthogonal mounting

Thermal characteristics
Temperature variations during measurement cause changes in length or deformation of the measuring setup. After a change in temperature of 5 K, a steel bar of 200 mm length expands by 10 µm.

Length changes resulting from a uniform deviation from the reference temperature can largely be compensated by resetting the datum on the measuring plate or a master; only the expansion of the scale and measured object go into the result of measurement.

Temperature changes during measurement cannot be ascertained mathematically. For critical components, HEIDENHAIN therefore uses special materials with low coefficients of expansion, such as are found in the HEIDENHAIN-CERTO gauge stand. This makes it possible to guarantee the high accuracy of HEIDENHAIN-CERTO even at ambient temperatures of 19 °C to 21 °C and variations of ±0.1 K during measurement.

In order to measure with complete accuracy, the length gauge should be switched on approximately 15 minutes before the first measurement.

The measuring loop: All components involved in the measuring assembly, including the length gauge

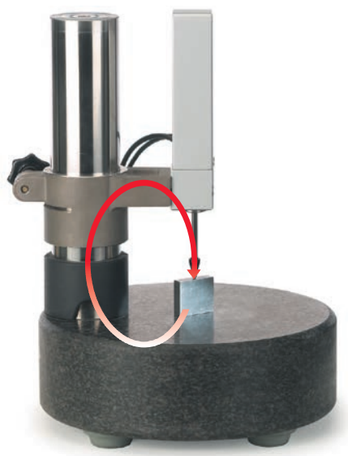

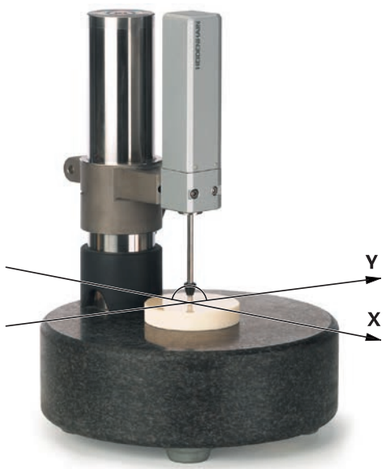

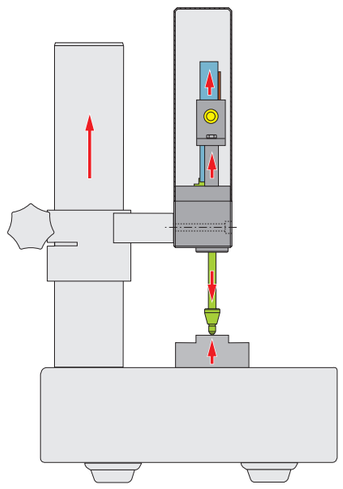

Thermal length change: Expansion of the measuring loop components as a result of heat

Calibration chart

All HEIDENHAIN length gauges are inspected before shipping for accuracy and proper function.

They are calibrated for accuracy during retraction and extension of the plunger. For the HEIDENHAIN-CERTO, the number of measuring positions is selected to ascertain very exactly not only the long-range error, but also the position error within one signal period.

The **Quality Inspection Certificate** confirms the specified system accuracy of each length gauge. The **calibration standards** ensure the traceability—as required by EN ISO 9001—to recognized national or international standards.

For the HEIDENHAIN-METRO and HEIDENHAIN-CERTO series, a **calibration chart** documents the position error over the measuring range. It also shows the measuring step and the measuring uncertainty of the calibration measurement.

For the HEIDENHAIN-METRO the calibration chart shows the mean value of one forward and one backward measuring stroke.

The HEIDENHAIN-CERTO calibration chart shows the envelope curve of the measured error. The HEIDENHAIN-CERTO length gauges are supplied with two calibration charts, each for different operating orientations.

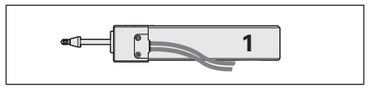

Operating orientation for calibration chart 1

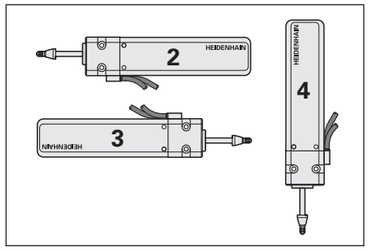

Operating orientation for calibration chart 2

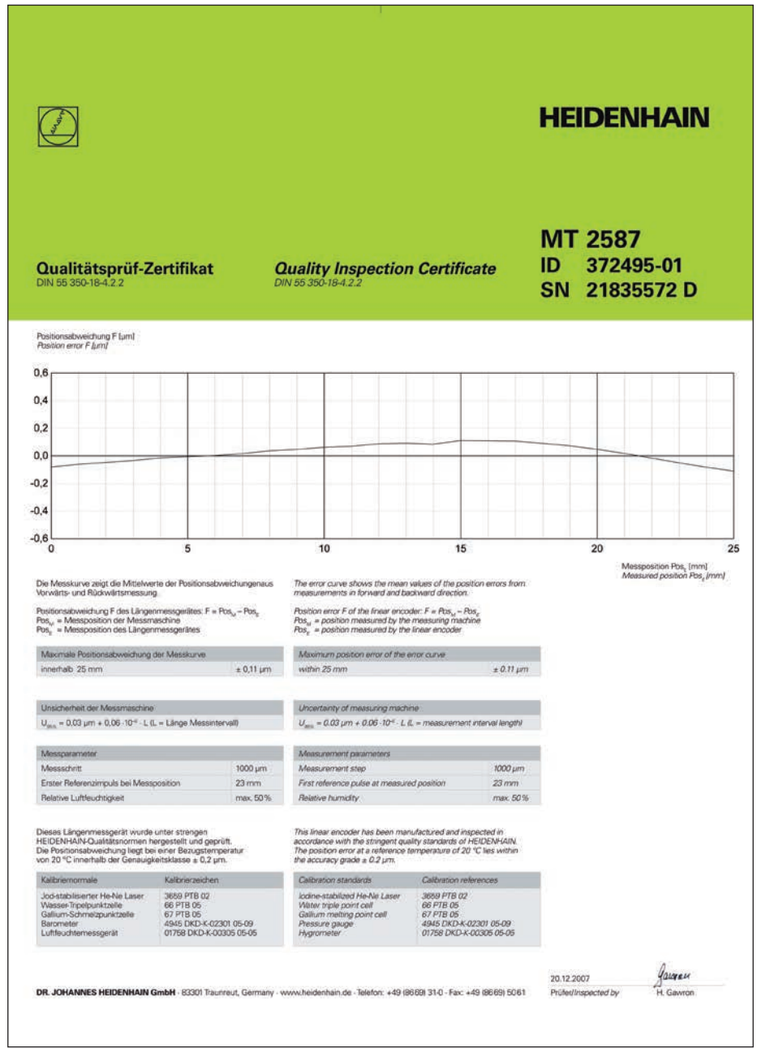

HEIDENHAIN

MT 2587
ID 372495-01
SN 21835572 D

Qualitätsprüf-Zertifikat
DIN 55 350-18-4.2.2

Quality Inspection Certificate
DIN 55 350-18-4.2.2

Positionsabweichung F [µm]
Position error F [µm]

0,6
0,4
0,2
0,0
-0,2
-0,4
-0,6

0 5 10 15 20 25

Messposition Pos_L [mm]
Measured position Pos_L [mm]

Die Messkurve zeigt die Mittelwerte der Positionsabweichungen aus Vorwärts- und Rückwärtsmessung.

The error curve shows the mean values of the position errors from measurements in forward and backward direction.

Positionsabweichung F des Längenmessgerätes: $F = Pos_M - Pos_L$
Pos_M = Messposition der Messmaschine
Pos_L = Messposition des Längenmessgerätes

Position error F of the linear encoder: $F = Pos_M - Pos_L$
Pos_M = position measured by the measuring machine
Pos_L = position measured by the linear encoder

Maximale Positionsabweichung der Messkurve	
innerhalb 25 mm	± 0,11 µm

Maximum position error of the error curve	
within 25 mm	*± 0.11 µm*

Unsicherheit der Messmaschine
$U_{MPE} = 0{,}03\ \mu m + 0{,}06 \cdot 10^{-6} \cdot L$ (L = Länge Messintervall)

Uncertainty of measuring machine
$U_{MPE} = 0.03\ \mu m + 0.06 \cdot 10^{-6} \cdot L$ (L = measurement interval length)

Messparameter	
Messschritt	1000 µm
Erster Referenzimpuls bei Messposition	23 mm
Relative Luftfeuchtigkeit	max. 50 %

Measurement parameters	
Measurement step	*1000 µm*
First reference pulse at measured position	*23 mm*
Relative humidity	*max. 50 %*

Dieses Längenmessgerät wurde unter strengen HEIDENHAIN-Qualitätsnormen hergestellt und geprüft. Die Positionsabweichung liegt bei einer Bezugstemperatur von 20 °C innerhalb der Genauigkeitsklasse ± 0,2 µm.

This linear encoder has been manufactured and inspected in accordance with the stringent quality standards of HEIDENHAIN. The position error at a reference temperature of 20 °C lies within the accuracy grade ± 0.2 µm.

Kalibriernormale	Kalibrierzeichen
Jod-stabilisierter He-Ne Laser	3659 PTB 02
Wasser-Tripelpunktzelle	66 PTB 05
Gallium-Schmelzpunktzelle	67 PTB 05
Barometer	4945 DKD-K-02301 05-09
Luftfeuchtemessgerät	01758 DKD-K-00305 05-05

Calibration standards	*Calibration references*
Iodine-stabilized He-Ne Laser	*3659 PTB 02*
Water triple point cell	*66 PTB 05*
Gallium melting point cell	*67 PTB 05*
Pressure gauge	*4945 DKD-K-02301 05-09*
Hygrometer	*01758 DKD-K-00305 05-05*

20.12.2007
Prüfer/Inspected by H. Gavron

DR. JOHANNES HEIDENHAIN GmbH · 83301 Traunreut, Germany · www.heidenhain.de · Telefon: +49 (8669) 31-0 · Fax: +49 (8669) 5061

Example

Temperature range
The length gauges are inspected at a **reference temperature** of 20 °C. The system accuracy given in the calibration chart applies at this temperature.
The **operating temperature range** indicates the ambient temperature limits between which the length gauges will function properly.
The **storage temperature range** of –20 °C to 60 °C applies for the device in its packaging.

Repeatability

Whereas the system accuracy applies over the entire measuring range, for some applications the repeatability is the decisive factor. It plays an important role in repeated measurements.

Repeatability is defined in the standards DIN 32876 and DKD-R 4-3, and describes a length gauge's capability to supply very similar measured values for identical measurands and conditions.

HEIDENHAIN ascertains the repeatability of the length gauges with five measurements near the lower plunger stop. The plunger is completely extended and retracted at medium speed. Since the length gauge was already in operation for at least 10 minutes before this, it is already in a stable thermal state.

The repeatability of the length gauges is usually better than the values listed in the table. The characteristic statistical distribution is shown in the diagram, using the ST 1200 as an example.

Repeatability depends on the
- combinations of materials used in the components,
- installed electronics,
- optomechanics used, and the
- bearing of the plunger.

Series	Repeatability $< \bar{x} + 2\sigma$
AT 1200	0.4 µm
AT 3000	0.8 µm
CT 2500	0.02 µm
CT 6000	0.03 µm
MT 101	0.04 µm
MT 1200	0.03 µm
MT 2500	0.09 µm
MT 60	0.06 µm
ST 1200	0.25 µm
ST 3000	0.7 µm

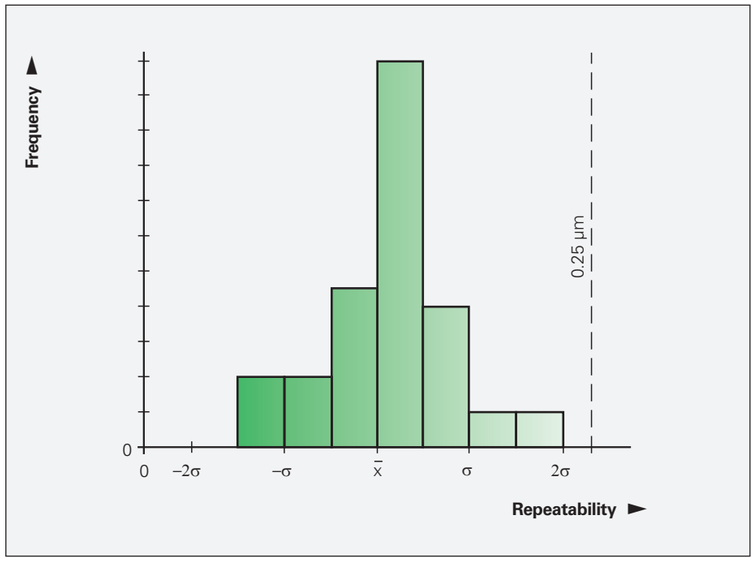

ST 1200: Statistical distribution of the repeatability

Mounting

Abbe principle
HEIDENHAIN length gauges enable you to work according to the Abbe measuring principle: the measured object and scale must be in alignment to avoid additional measuring error.

Fastening
The **CT 6000, MT 60,** and **MT 101** length gauges are fastened by two screws onto a plane surface. This ensures a mechanically stable installation of even these large length gauges. Special holders are available for fastening the MT 60 and MT 101 to the MS 100 gauge stand for the HEIDENHAIN-METRO (see *Accessories*).

The **CT 2500** is mounted by its standard clamping shank with 16h8 diameter. A holder is available for fastening the HEIDENHAIN-CERTO to the gauge stand (see *Accessories*).

The **AT, ST, MT 1200,** and **MT 2500** length gauges feature a standard clamping shank with 8h6 diameter. These HEIDENHAIN length gauges can therefore easily be used with existing measuring fixtures and stands.

HEIDENHAIN offers the choice of a special clamping sleeve or a clamping bush with one screw each. These accessories make it easier to fasten the length gauge without overloading the 8h6 clamping shank or damaging the ball-bush guide. The clamping bush also enables a wide tolerance field for the tightening torque and improves fastening.
Clamping sleeve: ID 386811-01
Clamping bush: ID 1177968-02

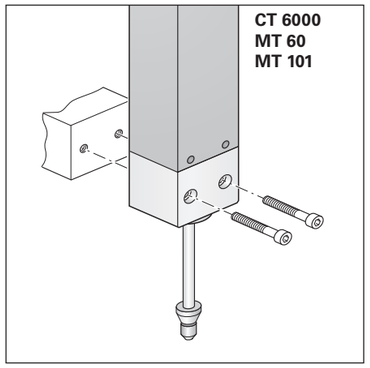

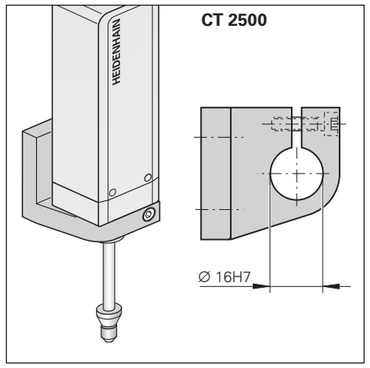

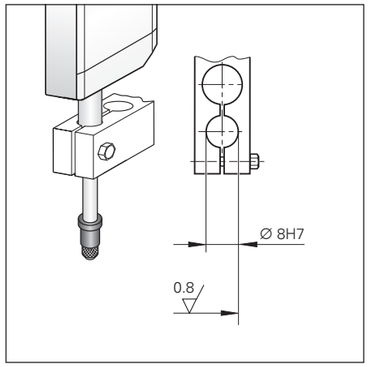

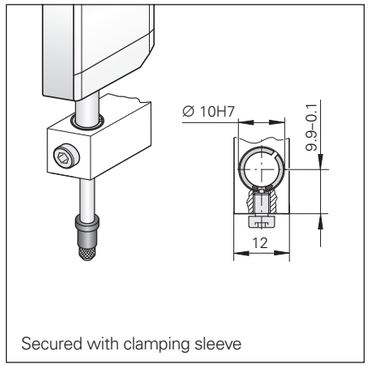

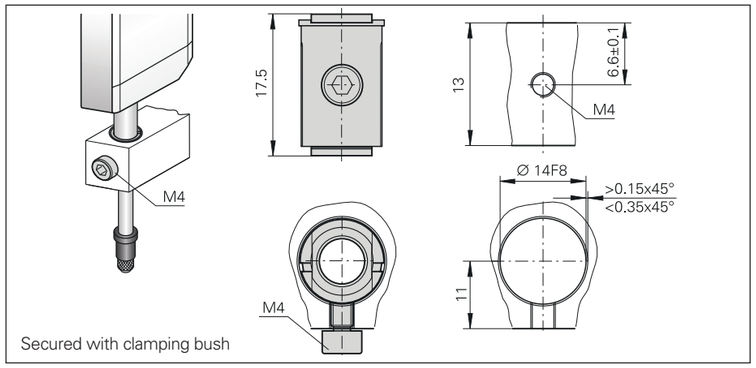

Operating orientation for HEIDENHAIN-CERTO
The HEIDENHAIN-CERTO can be operated at any attitude. However, the mounting position with horizontal length gauge and upward facing mounting surface should be avoided because in such a case no guarantee can be made for accuracy.

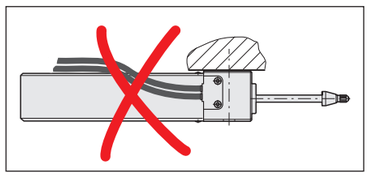

mm
Tolerancing ISO 8015
ISO 2768 - m H
≤ 6 mm: ±0.2 mm

Setup

HEIDENHAIN length gauges function according to the **Abbe measuring principle,** i.e. the measuring standard and the plunger are exactly aligned. All components comprising the **measuring loop,** such as the measuring standard, plunger, holder, and scanning head are designed in terms of their mechanical and thermal stability for the highest possible accuracy of the length gauge.

The **plungers** of the HEIDENHAIN length gauges are locked against rotation. Their optimally round form stays unchanged while stability and thermoconductivity remain unimpaired. They are provided with an M2.5 thread to hold measuring contacts (see *Accessories*)

The plungers of the HEIDENHAIN-ACANTO and HEIDENHAIN-SPECTO ST 1200 length gauges are protected by a rubber bellows. The **bellows** is characterized by high resistance to chemical and thermal influences and have a relatively low stiffness. Its influence on the gauge's mechanical behavior and the measuring force is therefore low.

Thermal characteristics
HEIDENHAIN length gauges have a defined thermal behavior. Since temperature variations during measurement can result in changes in the measuring loop, HEIDENHAIN uses special materials with low coefficients of expansion α_{therm} for the components of the measuring loop, for example in the CERTO length gauges. The scale is manufactured of Zerodur ($\alpha_{therm} \approx 0\ K^{-1}$), and the plunger and holder are of Invar ($\alpha_{therm} \approx 1 \times 10^{-6}\ K^{-1}$). This makes it possible to guarantee its high measuring accuracy over a relatively large temperature range.

Acceleration
Length gauges from HEIDENHAIN feature a **sturdy design.** Even high vibration and shock loads have no negative influence on accuracy.

Shock and vibration of any kind, however, are to be avoided during measurement so as not to impair the high accuracy of the measurement. The maximum values given in the specifications for shock and vibration apply to the effect of external acceleration on the length gauge. They describe only the mechanical stability of the length gauge, and imply no guarantee of function or accuracy.

In the length gauge itself, unchecked extension of the spring-driven or non-coupled moving plunger can cause high acceleration onto the measured object or measuring plate surface. For the MT 1200 and MT 2500 series length gauges, use the cable release whenever possible (see *Accessories*). The cable release features adjustable pneumatic damping to limit the extension velocity to an uncritical value.

Design of CT 6000 MT 60

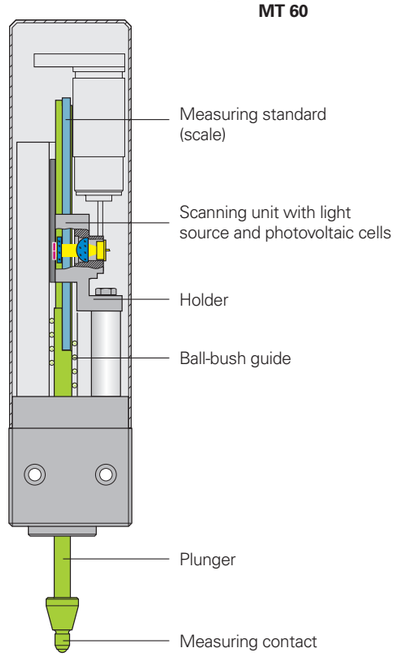

Design of ST 1200

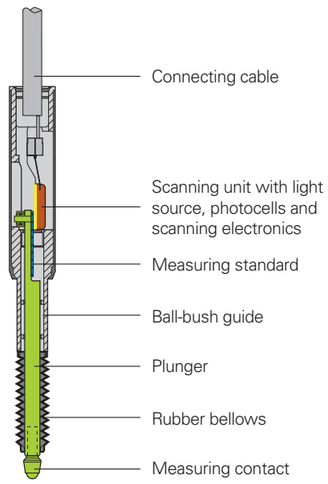

Plunger guideway
HEIDENHAIN length gauges are available with various plunger guides.

The plungers of the HEIDENHAIN-ACANTO length gauges work with **sliding guides.** The sliding guides have the following properties:
- Sturdiness thanks to few moving parts
- Impervious to shock and vibration
- High plunger speeds and long service life thanks to high-quality ceramic bearings
- Less sensitivity to improper clamping

The HEIDENHAIN-METRO, HEIDENHAIN-CERTO, and HEIDENHAIN-SPECTO length gauges are equipped with a **ball-bush guide**. The following are some of the basic properties of ball-bush guides in HEIDENHAIN length gauges:
- Low friction, which makes versions of length gauges with reduced gauging force possible
- Safe plunger extension and retraction even with high radial force
- High precision of the measuring loop thanks to a guide that is free of play (the bearing and plunger are specially fitted during manufacture)

Expendable parts
HEIDENHAIN length gauges contain components that are subject to wear, depending on the application and manipulation. These include in particular the following parts:
- Guideway (tested for at least 60 million strokes*)
- Cable link for CT, MT 60, and MT 101 (tested for at least 1 million strokes*)
- Scraper rings
- Rubber bellows for AT and ST 1200

* With CT, MT 60M, and MT 101M only with actuation by switch box

Note
DIADUR is a registered trademark of DR. JOHANNES HEIDENHAIN GmbH, Traunreut, Germany. Zerodur is a registered trademark of Schott Glaswerke in Mainz, Germany.

Sliding guide

Ball-bush guide

Gauging force and plunger actuation

Gauging force
Gauging force is the force that the plunger exercises on the measured object. If the gauging force is too high, then the measuring contact or measured object may deform in response. If the gauging force is too low, then a layer of dust or contamination may prevent the plunger from fully contacting the measured object. The gauging force depends on the type of plunger actuation.

Spring-based plunger actuation
For the AT 1218, AT 3018, MT 12x1, MT 25x1, ST 12x8, and ST 30x8, a built-in spring extends the plunger to the measuring position and produces the **gauging force.** The plunger is extended when at rest. The gauging force depends on the following criteria:
- The operating orientation
- The plunger position (the force changes over the course of the measuring range)
- The direction of measurement (whether extension or retraction of the plunger is used)

The graphs show the gauging force across the measuring range during horizontal retraction and extension of the plunger.

The MT 1281 and ST 1288 length gauges are available with various gauging forces. Delicate materials can therefore be measured without deformation.

The gauging forces can be divided into the following classes:
- Reduced MR: approx. half the gauging force of the standard variant
- Low MW: gauging force at the beginning of the measuring range, approx. 0.01 N
- Springless MG: constant gauging force over the entire measuring range

So as not to influence the gauging force, the ST 1288 MR and ST 1288 MG variants are provided without a bellows.

Plunger actuation via measured object
The complete length gauge is moved by the measuring device toward the measured object, or vice versa. The measurement is usually performed via plunger retraction.

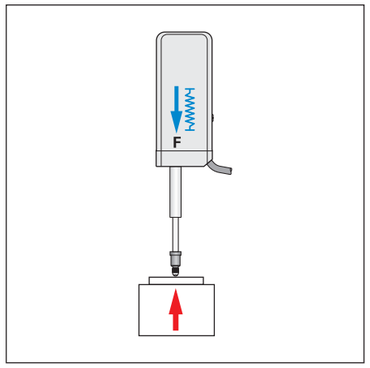

Plunger actuation via a cable release (MT 12x1, MT 25x1)
In this method, the plunger is manually raised and lowered onto the measured object by means of a cable release. This measurement is performed with plunger extension.

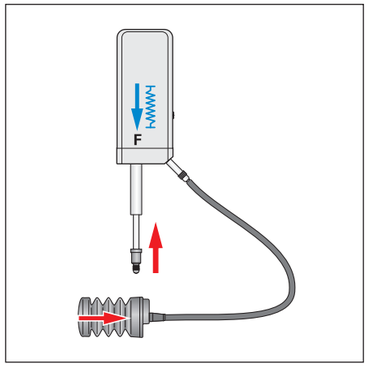

Built-in, adjustable pneumatic damping reduces the plunger extension speed so as to prevent rebound (e.g., on very hard materials). This prevents measuring error due to bouncing.

Special variants

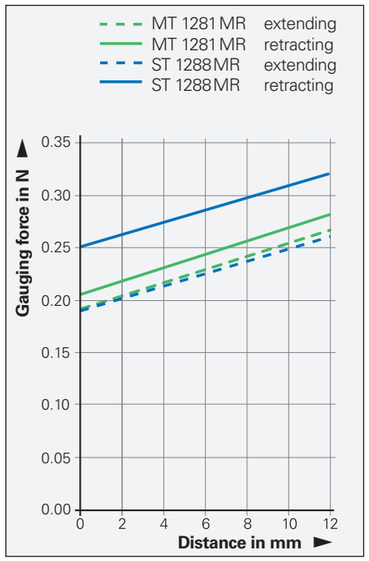

12 mm measuring range

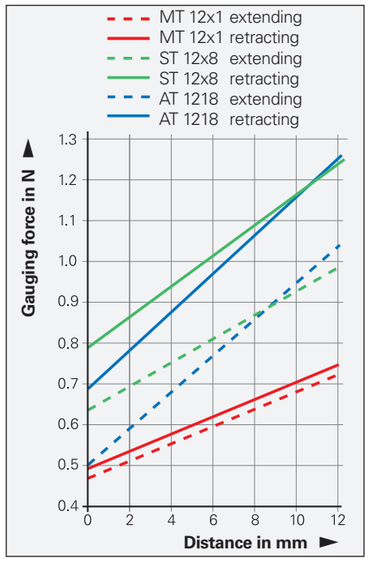

25 mm/30 mm measuring range

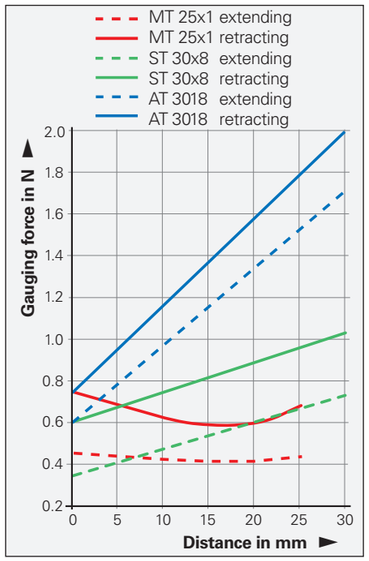

Pneumatic plunger actuation
The pneumatically actuated plungers of the AT 1217, AT 3017, MT 1287, MT 2587, ST 12x7, and ST 30x7 length gauges are extended by the application of compressed air. When the air connection is ventilated, the integral spring retracts the plunger. to a protected resting position within the housing.

The **gauging force** can be adjusted to the measuring task through the level of air pressure. At constant pressure, it depends on the operating orientation and the plunger position.

The diagrams show the respective gauging force for a horizontal operating orientation depending on the working pressure applied with the plunger fully extended and fully retracted. These are approximate values that are subject to changes due to tolerances and depend on seal wear.

The working pressure defines the pressure range of the first complete plunger extension up to the maximum specified range.

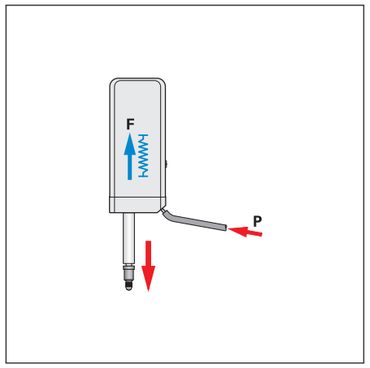

Note
The compressed air introduced directly into the length gauges must be properly conditioned and must comply with the following quality classes as per **ISO 8573-1** (1995 edition):
- Solid contaminant: Class 1 (max. particle size 0.1 µm and max. particle density 0.1 mg/m^3 at 1 · 10^5 Pa)
- Total oil content: Class 1 (max. oil concentration 0.01 mg/m^3 at 1 · 10^5 Pa)
- Max. pressure dew point: Class 4 but with reference conditions of +3 °C at 2 · 10^5 Pa

HEIDENHAIN offers the **DA 400 compressed air unit** for purifying compressed air. The minimum flow rate is 10 l/min.

For more information, ask for our *DA 400* Product Information Sheet.

12 mm measuring range
(pneumatically actuated)

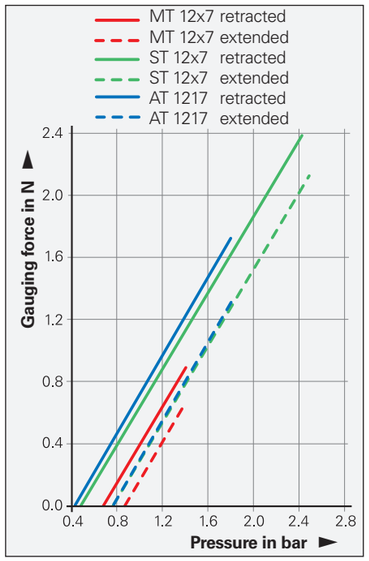

25 mm/30 mm measuring range
(pneumatically actuated)

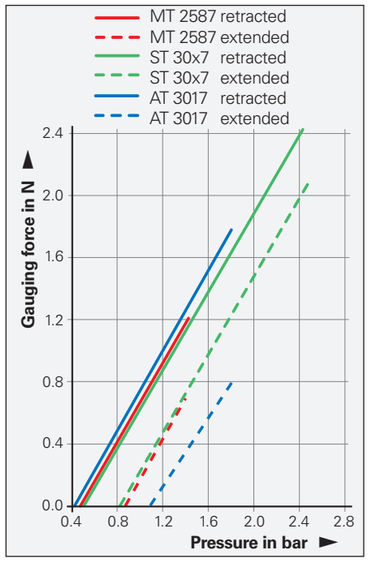

The diagrams apply for the **horizontal operating orientation,** except for special variants. The following compensation values are to be taken into account for other operating orientations.

Model	Operating orientation vertical	
	Upward	Downward
AT 121x **AT 301x**	–0.12 N –0.18 N	+0.12 N +0.18 N
MT 12xx **MT 1281MR** **MT 25x1** **MT 2587**	–0.13 N – –0.17 N –0.19 N	+0.13 N +0.13 N +0.17 N +0.19 N
ST 12x7 **ST 12x8** **ST 30xx**	–0.07 N –0.08 N –0.11 N	+0.07 N +0.08 N +0.11 N

Motorized plunger actuation
The CT 2501, CT 6001, MT 60 M, and MT 101 M length gauges feature an integral motor that moves the plunger. It is operated through the switch box either by push button or over the connection for external actuation. The plungers of the CT 2501, CT 6001, and MT 60 M length gauges must not be moved by hand if the switch box is connected.

The **gauging force** of the CT 2501, CT 6001, and MT 60 M motorized length gauges is adjustable in three stages through the switch box. The force remains constant over the measuring range but depends on the operating orientation.
Regardless of the operating orientation—whether it measures vertically downward (with the SG 101 V switch box) or horizontally (with the SG 101 H switch box)—the MT 101 M exercises a constant gauging force.

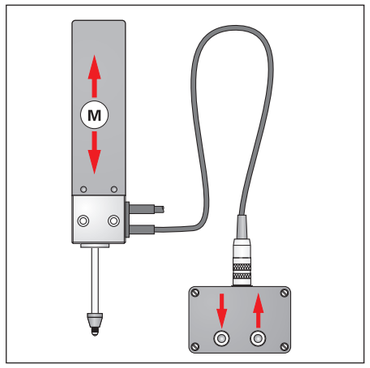

	CT 2501 CT 6001	MT 60 M	MT 101 M
Gauging force	Via motor	Via motor	Via motor
Vertically downward	0.85 N/1 N/1.45 N	1 N/1.25 N/1.75 N	0.7 N with SG 101 V
Vertically upward	–/–/0.55 N	–/–/0.85 N	–
Horizontal	–/0.55 N/1 N	–/0.8 N/1.3 N	0.7 N with SG 101 H

External plunger actuation via coupling
For the CT 2502, CT 6002, MT 60 K, MT 101 K, and special versions (without spring) of the MT 1200, MT 2500, and ST 1288, the plunger is freely movable. For position measurement, the plunger is connected by a coupling with a moving machine element. The force needed to move the plunger is specified as the required **moving force.** It depends on the operating orientation.

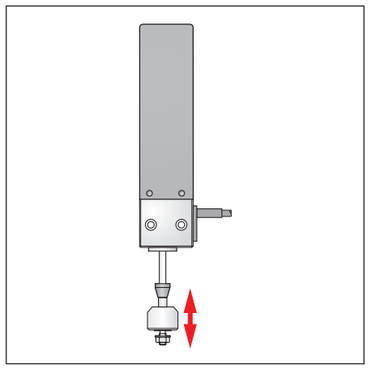

	CT 2502 CT 6002	MT 60 K	MT 101 K	MT 1271 ⊓⊔TTL MT 1281 ∿ 1 V_{PP}	MT 2571 ⊓⊔TTL MT 2581 ∿ 1 V_{PP}	ST 1288
Gauging force	Moving force[1)]	Moving force[1)]	Moving force[1)]	–	–	–
Vertically downward	0.45 N	0.4 N	1.7 N	0.13 N	0.17 N	0.2 N
Vertically upward	0.55 N	0.55 N	2 N	–	–	–
Horizontal	0.15 N	0.15 N	0.4 N	–	–	–

[1)] Force required to move the plunger or the force of its weight

HEIDENHAIN-ACANTO

Absolute length gauges with EnDat interface
- **Online diagnostics**
- **Protection rating of up to IP67**
- **Serial data transmission with CRC**

AT 1200

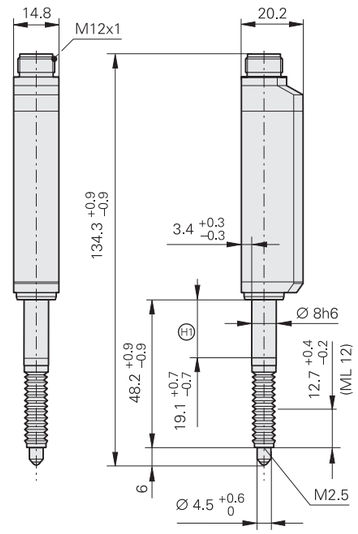

AT 3000

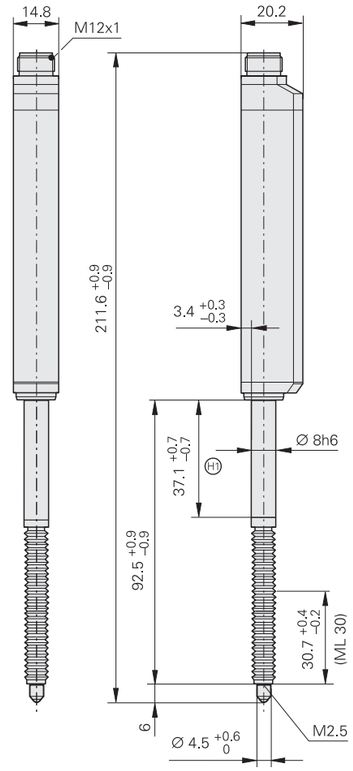

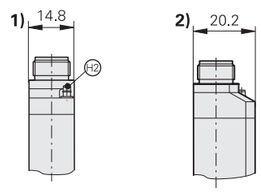

Dimension changes under max. pressure (1.8 bar)

	1)	2)
AT 1217	14.8...15.1	20.2...19.9
AT 3017	14.8...15.2	20.2...19.8

mm
Tolerancing ISO 8015
ISO 2768 - m H
< 6 mm: ±0.2 mm

ML = Measuring length
H1 = Clamping area
H2 = Air connection for 2 mm tube

Mechanical data	**AT 1218**	**AT 3018**	**AT 1217**	**AT 3017**
Plunger actuation Position of plunger at rest	Via measured object Extended		Pneumatic Retracted	
Measuring standard	DIADUR grating on glass; grating period: 188.4 µm			
System accuracy	±1 µm	±2 µm	±1 µm	±2 µm
Position error per signal period	≤ ±0.7 µm			
Measuring range	12 mm	30 mm	12 mm	30 mm
Working pressure	–		0.7 bar to 1.8 bar	1.1 bar to 1.8 bar
Mech. permissible traversing speed	≤ 80 m/min	≤ 120 m/min	≤ 80 m/min	≤ 120 m/min
Radial force	≤ 0.5 N (mechanically permissible)			
Fastening	Clamping shank Ø 8h6			
Operating orientation	Any			
Vibration 55 Hz to 2000 Hz **Shock** 11 ms	≤ 100 m/s^2 (EN 60068-2-6) ≤ 500 m/s^2 (EN 60068-2-27)			
Operating temperature	10 °C to 40 °C; reference temperature: 20 °C			
Protection EN 60529	IP67		IP64[1)] IP67 upon request	IP64[1)]
Mass without cable	80 g	100 g	80 g	100 g

[1)] IP67 with sealing air

Electrical data	**EnDat**			
Interface	EnDat 2.2			
Ordering designation	EnDat 22			
Measuring step	23 nm	368 nm	23 nm	368 nm
Calculation time t_{cal} Clock frequency	≤ 5 µs ≤ 8 MHz			
Electrical connection	8-pin M12 flange socket (male)			
Cable length	≤ 100 m with HEIDENHAIN cable			
Supply voltage	DC 3.6 V to 14 V			
Power consumption (max.)	*3.6 V:* ≤ 550 mW *14 V:* ≤ 650 mW			
Current consumption (typical)	*5 V:* 80 mA (without load)			

HEIDENHAIN-CERTO

Incremental length gauges with ±0.1 µm/±0.05[1] µm*/±0.03 µm[1] accuracy

- **For very high accuracy**
- **Low thermal expansion through thermally invariant materials**
- **High-precision ball bearing guide**

CT 2500

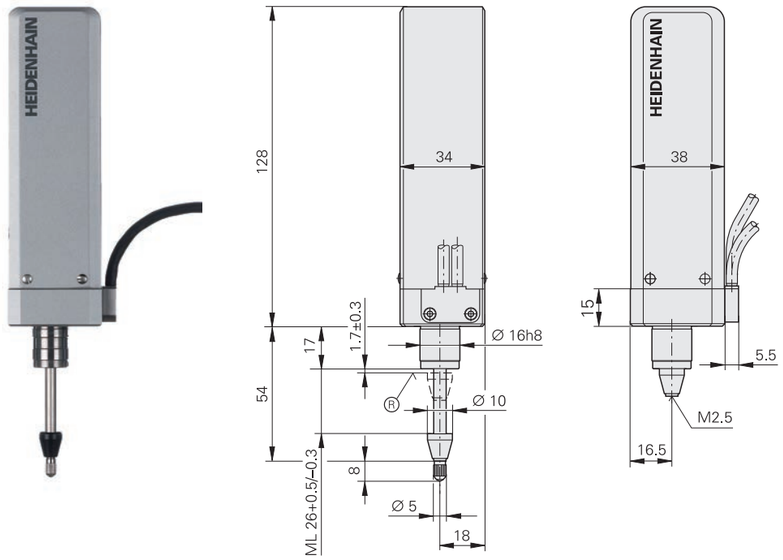

CT 6000

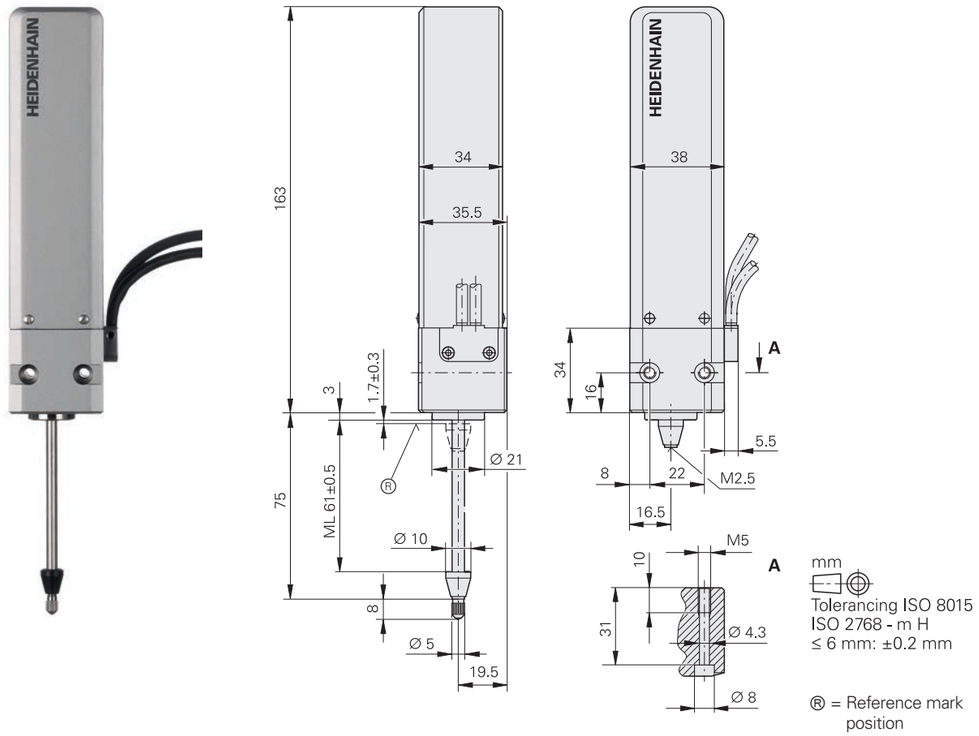

Mechanical data	CT 2501	CT 6001	CT 2502	CT 6002
Plunger actuation	Via motor		Via coupling with moving machine part	
Measuring standard	DIADUR phase grating on Zerodur glass ceramic; grating period: 4 µm			
System accuracy at 19 °C to 21 °C	±0.1 µm, ±0.03 µm[1]	±0.1 µm, ±0.05 µm[1]	±0.1 µm, ±0.03 µm[1]	±0.1 µm, ±0.05 µm[1]
Position error per signal period	≤ ±0.02 µm			
Short-range accuracy typically	0.03 µm			
Reference mark	One, approx. 1.7 mm below upper stop			
Measuring range	25 mm	60 mm	25 mm	60 mm
Radial force	≤ 0.5 N (mechanically permissible)			
Fastening	Clamping shank (Ø 16h8)	Plane surface	Clamping shank (Ø 16h8)	Plane surface
Operating orientation	Any (for preferred operating orientation, see *Mounting*)			
Vibration 55 Hz to 2000 Hz **Shock** 11 ms	≤ 100 m/s^2 (EN 60068-2-6) ≤ 1000 m/s^2 (EN 60068-2-27)			
Operating temperature	10 °C to 40 °C; reference temperature: 20 °C			
Protection EN 60529	IP50			
Mass without cable	520 g	700 g	480 g	640 g

Electrical data	CT 2501	CT 6001	CT 2502	CT 6002
Interface	∿ 11 µA$_{PP}$			
Signal period	2 µm			
Measuring velocity	≤ 24 m/min (depending on the subsequent electronics) ≤ 12 m/min with the ND 28x digital readout			
Electrical connection*	• Cable 1.5 m with 15-pin D-sub connector (male) • Cable 1.5 m with 9-pin M23 connector (male) Interface electronics integrated in connector			
Cable length	≤ 30 m			
Supply voltage	DC 5 V ±0.25 V/< 170 mA		DC 5 V ±0.25 V/< 120 mA	

Required accessories*	For CT 2501	For CT 6001
Switch box	SG 25 M	SG 60 M

* Please select when ordering
1) After linear length-error compensation in the evaluation electronics
2) Force required to move the plunger or the force of its weight

HEIDENHAIN-METRO

Incremental length gauges with ±0.2 µm accuracy
- **High repeatability**
- **Various gauging force variants**
- **Various possibilities for plunger actuation**

MT 1200

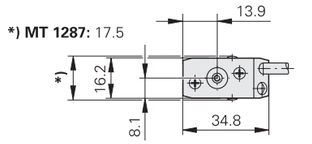

	MT 12x1	MT 1287
L1	18.5	22.0
L2	10.1	6.2
L3	8.1	4.2

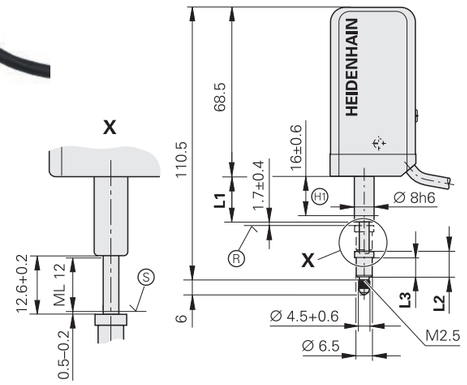

MT 2500

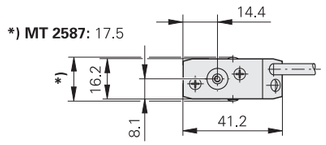

	MT 25x1	MT 2587
L1	37.0	41.0
L2	10.1	6.2
L3	8.1	4.2

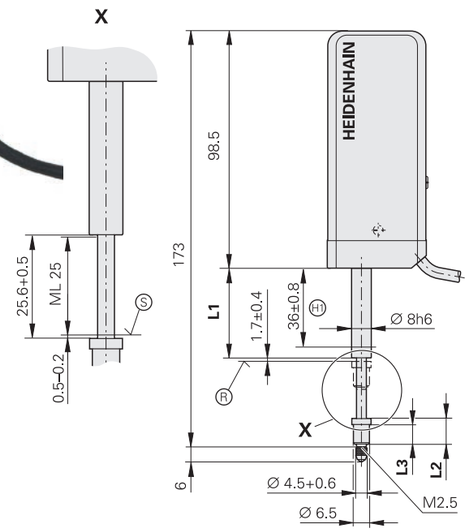

MT 1287
MT 2587

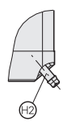

mm
Tolerancing ISO 8015
ISO 2768 - m H
≤ 6 mm: ±0.2 mm

Ⓡ = Reference mark position
Ⓢ = Beginning of measuring length
(H1) = Clamping area
(H2) = Air connection for 2 mm tube

Mechanical data	**MT 1271** ⊓⊔ TTL **MT 1281** ∿ 1 V_{PP}	**MT 2571** ⊓⊔ TTL **MT 2581** ∿ 1 VPP	**MT 1287** ∿ 1 V_{PP}	**MT 2587** ∿ 1 V_{PP}
Plunger actuation Position of plunger at rest	Via cable or measured object Extended		Pneumatic Retracted	
Measuring standard	DIADUR phase grating on Zerodur glass ceramic; grating period: 4 µm			
System accuracy	±0.2 µm			
Position error per signal period	≤ ±0.02 µm			
Short-range accuracy typically	0.03 µm	0.04 µm	0.03 µm	0.04 µm
Reference mark	≈ 1.7 mm below upper stop			
Measuring range	12 mm	25 mm	12 mm	25 mm
Working pressure	–		0.9 bar to 1.4 bar	
Radial force	≤ 0.8 N (mechanically permissible)			
Fastening	Clamping shank Ø 8h6			
Operating orientation	Any; *for version without spring and with low gauging force:* vertically downward			
Vibration 55 Hz to 2000 Hz **Shock** 11 ms	≤ 100 m/s^2 (EN 60068-2-6) ≤ 1000 m/s^2 (EN 60068-2-27)			
Operating temperature	10 °C to 40 °C; reference temperature: 20 °C			
Protection EN 60529	IP50		IP67 (with sealing air)	
Mass without cable	100 g	180 g	110 g	190 g

Electrical data	**MT 1271** **MT 2571**		**MT 128x** **MT 258x**
Interface	⊓⊔ TTL		∿ 1 V_{PP}
Integrated interpolation*	5-fold	10-fold	–
Signal period	0.4 µm	0.2 µm	2 µm
Mech. permissible traversing speed	≤ 30 m/min		
Edge separation *a* at scanning frequency*/traversing speed[1)] 200 kHz ≤ 24 m/min 100 kHz ≤ 12 m/min 50 kHz ≤ 6 m/min 25 kHz ≤ 3 m/min	 ≥ 0.23 µs ≥ 0.48 µs ≥ 0.98 µs –	 – ≥ 0.23 µs ≥ 0.48 µs ≥ 0.98 µs	–
Electrical connection* (interface electronics integrated in connector)	Cable 1.5 m with 15-pin D-sub connector (male)		Cable 1.5 m with • 15-pin D-sub connector (male) • 12-pin M23 connector (male)
Cable length	≤ 30 m with HEIDENHAIN cable		
Voltage supply	DC 5 V ±0.5 V/< 160 mA (without load)		DC 5 V ±0.25 V/< 130 mA

* Please select when ordering [1)] At the corresponding cutoff or scanning frequency

HEIDENHAIN-METRO

Incremental length gauges with ±0.5 µm/±1 µm accuracy
- **Large measuring ranges**
- **Plunger actuation by motor or coupling**
- **Ball-bush guided plunger**

MT 60M

MT 60

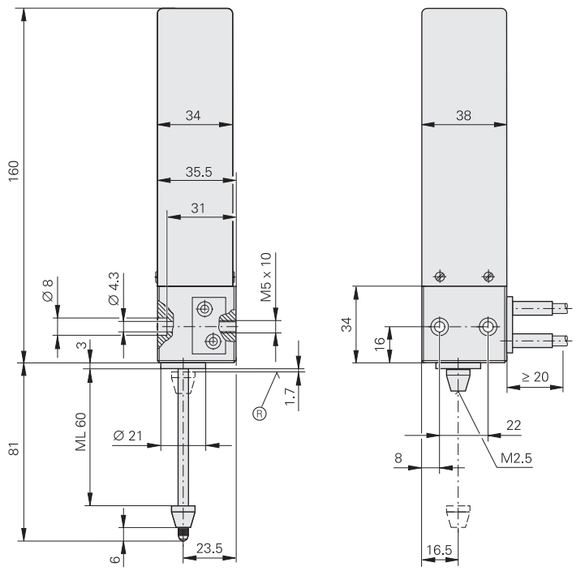

MT 101M

MT 101

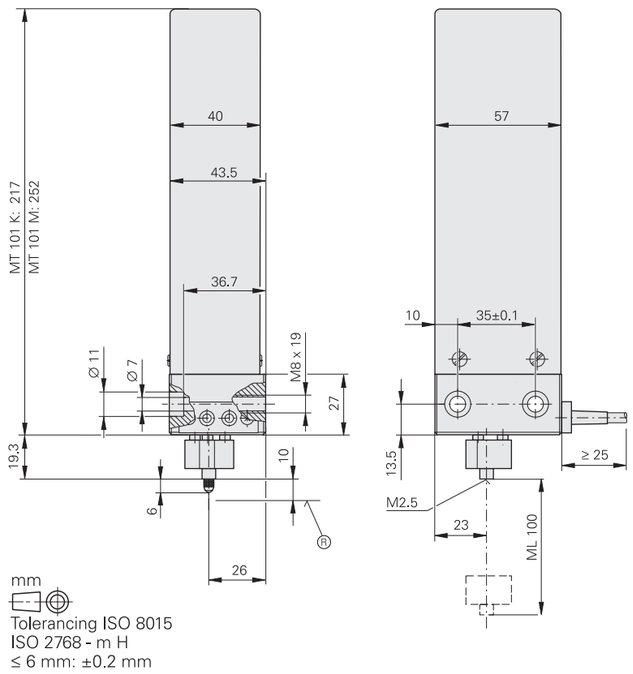

mm
Tolerancing ISO 8015
ISO 2768 - m H
≤ 6 mm: ±0.2 mm

® = Reference mark position

Mechanical data	MT 60M	MT 101M	MT 60K	MT 101K
Plunger actuation	Via motor		Via coupling with moving machine part	
Measuring standard	DIADUR grating on silica glass; grating period: 10 µm			
System accuracy	±0.5 µm	±1 µm	±0.5 µm	±1 µm
Position error per signal period	≤ ±0.1 µm			
Reference mark	≈ 1.7 mm from top	≈ 10 mm from top	≈ 1.7 mm from top	≈ 10 mm from top
Measuring range	60 mm	100 mm	60 mm	100 mm
Radial force mechanically permissible	≤ 0.5 N	≤ 2 N	≤ 0.5 N	≤ 2 N
Fastening	Plane surface			
Operating orientation	Any	Vertically downward with SG 101V Horizontal with SG 101H	Any	
Vibration 55 Hz to 2000 Hz **Shock** 11 ms	≤ 100 m/s^2 (EN 60068-2-6) ≤ 1000 m/s^2 (EN 60068-2-27)			
Operating temperature	10 °C to 40 °C; reference temperature: 20 °C			
Protection EN 60529	IP50			
Mass without cable	700 g	1400 g	600 g	1200 g

Electrical data	MT 60M	MT 101M	MT 60K	MT 101K
Interface	∿ 11 µA$_{PP}$			
Signal period	10 µm			
Measuring velocity	≤ 18 m/min	≤ 60 m/min	≤ 18 m/min	≤ 60 m/min
Electrical connection*	Cable, 1.5 m, with 15-pin D-sub connector (male) or with 9-pin M23 connector (male)			
Cable length	≤ 30 m with HEIDENHAIN cable			
Supply voltage	DC 5 V ±0.25 V			
Current consumption	< 120 mA	< 70 mA		

Required accessories*	For MT 60 M	For MT 101 M
Switch box	SG 60M	*Vertical orientation:* SG 101 V *Horizontal orientation:* SG 101 H
Power adapter	–	Required (see *Accessories*)

* Please select when ordering

HEIDENHAIN-SPECTO

Incremental length gauges with ±1 µm accuracy
- **Very compact dimensions**
- **Protection rating of up to IP67**
- **Especially durable ball-bush guide**

ST 1200

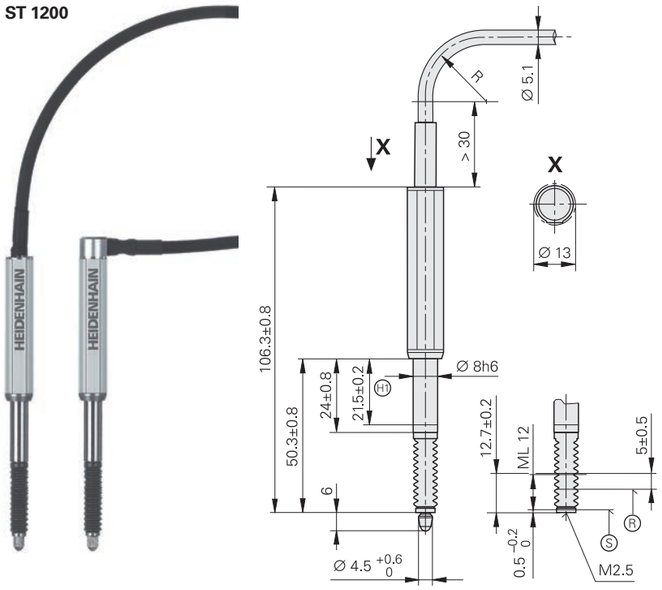

ST 3000

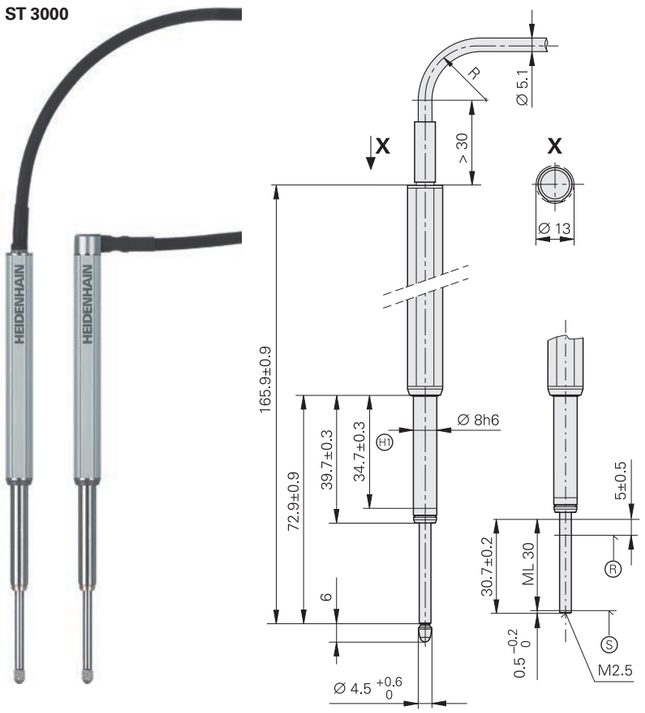

ST 12x7
ST 30x7

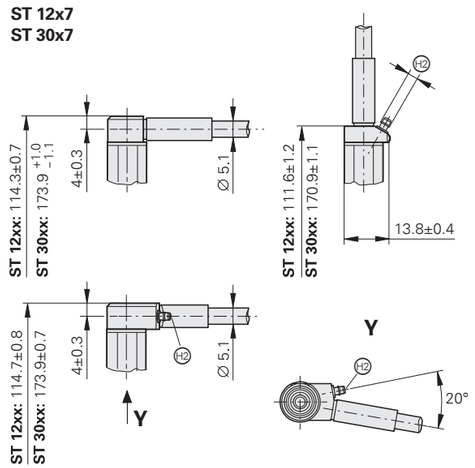

mm
Tolerancing ISO 8015
ISO 2768 - m H
≤ 6 mm: ±0.2 mm

Ⓡ = Reference mark position
Ⓢ = Beginning of measuring length
H1 = Clamping area
H2 = Air connection for 2 mm tube

Mechanical data	**ST 1278** ⊓⊔ TTL **ST 1288** ∿ 1 V_{PP}	**ST 3078** ⊓⊔ TTL **ST 3088** ∿ 1 V_{PP}	**ST 1277** ⊓⊔ TTL **ST 1287** ∿ 1 V_{PP}	**ST 3077** ⊓⊔ TTL **ST 3087** ∿ 1 V_{PP}
Plunger actuation Position of plunger at rest	Via measured object Extended		Pneumatic Retracted	
Measuring standard	DIADUR grating on glass; grating period: 20 µm			
System accuracy	±1 µm			
Position error per signal period	≤ ±0.2 µm			
Short-range accuracy typically	0.3 µm			
Reference mark	≈ 5 mm below upper stop			
Measuring range	12 mm	30 mm	12 mm	30 mm
Working pressure	–		0.8 bar to 2.5 bar	
Radial force	≤ 0.8 N (mechanically permissible)			
Fastening	Clamping shank Ø 8h6			
Operating orientation	Any			
Vibration 55 Hz to 2000 Hz **Shock** 11 ms	≤ 100 m/s^2 (EN 60068-2-6) ≤ 1000 m/s^2 (EN 60068-2-27)			
Operating temperature	10 °C to 40 °C; reference temperature: 20 °C			
Protection EN 60529	IP67/IP64	IP64		
Mass without cable	40 g	50 g	40 g	50 g

Electrical data	**ST 127x** **ST 307x**		**ST 128x** **ST 308x**
Interface	⊓⊔ TTL		∿ 1 V_{PP}
Integrated interpolation*	5-fold	10-fold	–
Signal period	4 µm	2 µm	20 µm
Edge separation *a* at scanning frequency*/traverse speed[2)] 100 kHz ≤ 72 m/min[1)] 50 kHz ≤ 60 m/min 25 kHz ≤ 30 m/min	 ≥ 0.48 µs ≥ 0.98 µs ≥ 1.98 µs	 ≥ 0.23 µs ≥ 0.48 µs ≥ 0.98 µs	–
Electrical connection*	Cable 1.5 m with 15-pin D-sub connector (male, integrated interface electronics)		Cable 1.5 m with • 15-pin D-sub connector (male) • 12-pin M23 connector (male)
Cable outlet*	Axial or radial		
Cable length	≤ 30 m with HEIDENHAIN cable		
Supply voltage	DC 5 V ±0.5 V		
Current consumption	< 100 mA (without load)		< 55 mA

* Please select when ordering
[1)] Mechanically limited
[2)] At a corresponding cutoff or scanning frequency

Length gauges with low measuring forces

Incremental length gauges
- **Ball-bush guided plunger**
- **Same specifications as for standard products**

MT 1200

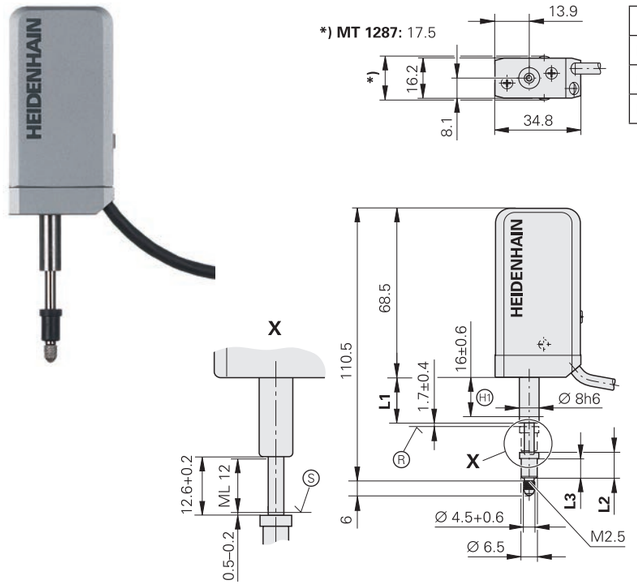

	MT 12x1	MT 1287
L1	18.5	22.0
L2	10.1	6.2
L3	8.1	4.2

ST 12

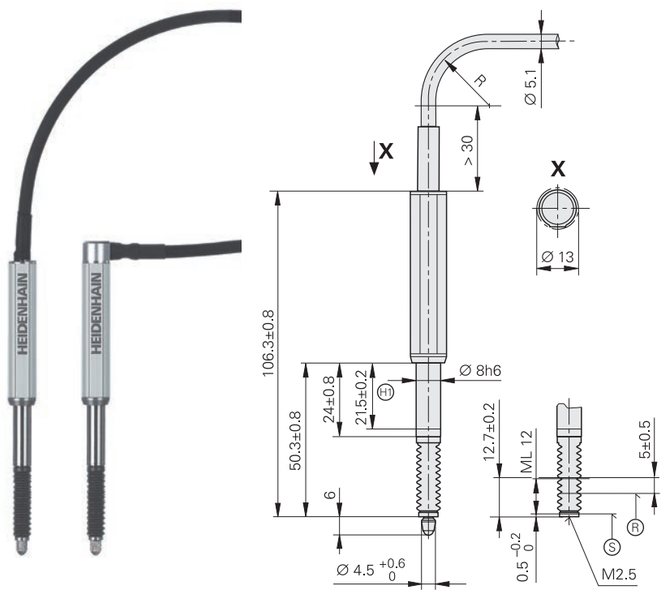

mm
Tolerancing ISO 8015
ISO 2768 - m H
≤ 6 mm: ±0.2 mm

Ⓡ = Reference mark position
Ⓢ = Beginning of measuring length
Ⓗ1 = Clamping area

Mechanical data	MT 1281	ST 1288
Plunger actuation	Via cable or measured object	Via measured object
Measuring standard	DIADUR phase grating on Zerodur glass ceramic; grating period: 4 µm	DIADUR grating on glass; grating period: 20 µm
System accuracy	±0.2 µm	±1 µm
Short-range accuracy typically	0.03 µm	0.3 µm
Measuring range	12 mm	
Fastening	Clamping shank Ø 8h6	
Protection EN 60529	IP50	IP50
Interface	∿ 1 V_{PP}	
Signal period	2 µm	20 µm

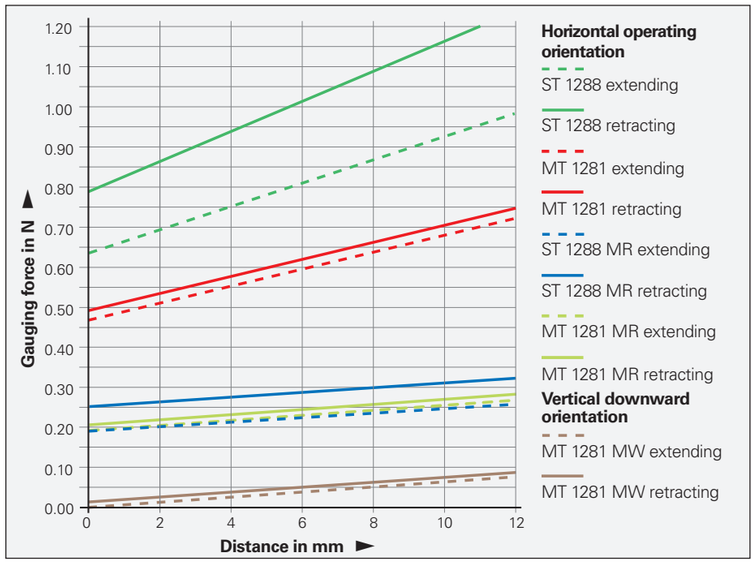

The diagram applies for the **horizontal operating orientation,** except for MT 1281 MW. For compensation values for other orientations, see the table on p. 20.

	Version	Gauging force	Operating orientation
MT 1281	Default	0.75 N[1)]	Any desired operating orientation
	MR	0.25 N[1)]	Vertically downward and horizontal
	MW	0 N[1)]	Vertically downward
	MG	0.13 N[2)]	Vertically downward
ST 1288	Default	0.65 N[1)]	Any desired operating orientation
	MR	0.4 N[1)]	Any desired operating orientation
	MG	0.2 N[2)]	Vertically downward

[1)] With nearly fully extended plunger
[2)] Over the entire measuring range

Accessories
Measuring contacts

Ball-type contact

Steel	ID 202504-01
Carbide	ID 202504-02
Ruby	ID 202504-03

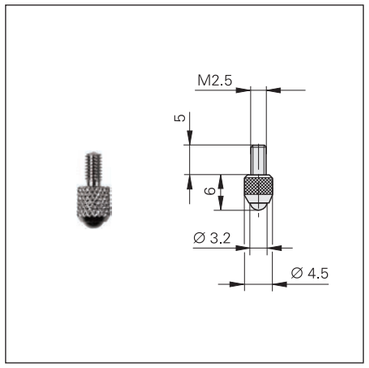

Domed contact

Carbide	ID 229232-01

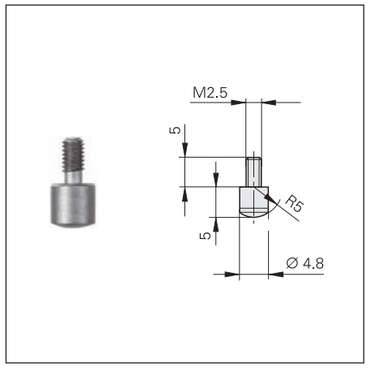

Flat contact

Steel	ID 270922-01
Carbide	ID 202506-01

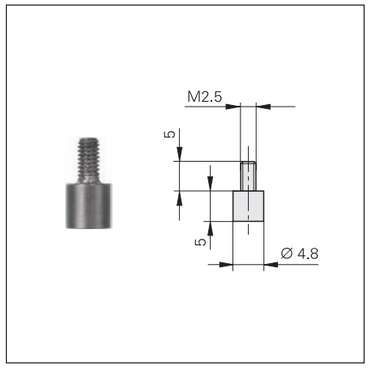

Pin-type contact

Steel	ID 202505-01

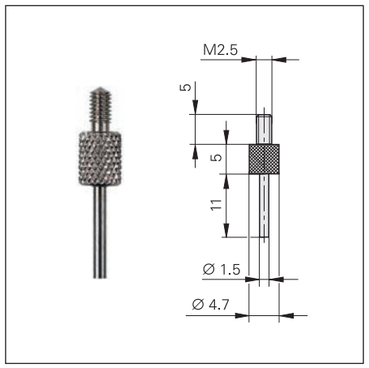

Knife-edge contact

Steel	ID 202503-01

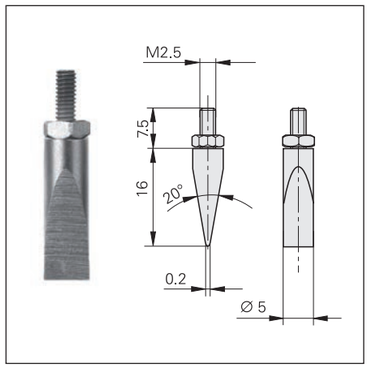

mm
Tolerancing ISO 8015
ISO 2768 - m H
≤ 6 mm: ±0.2 mm

Roller contact, steel
For a low-friction contact with moving surfaces

Crowned	ID 202502-03
Cylindrical	ID 202502-04

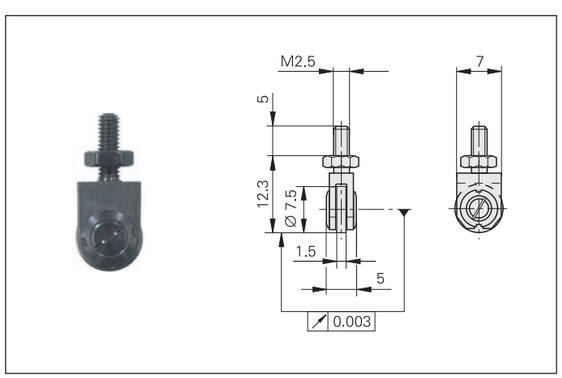

Adjustable contact, carbide
For exact parallel alignment to the measuring plate surface

Flat	ID 202507-01
Knife-edged	ID 202508-01

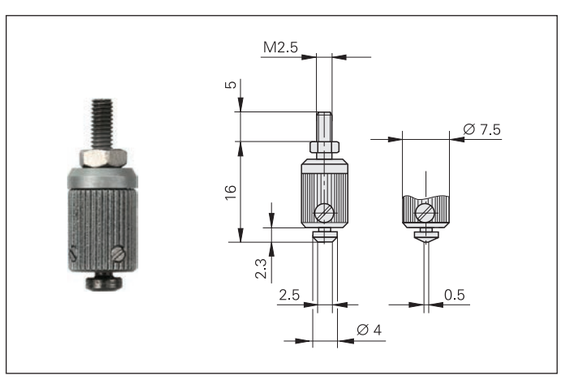

Switch boxes, coupling

Switch boxes for CT 2501, CT 6001, MT 60 M, MT 101 M
Switch boxes are required for length gauges with motorized plunger actuation. The plunger is controlled through two push buttons or by external signal. The SG 25 M and SG 60 M switch boxes can adjust the gauging force in three stages.

SG 25 M
ID 317436-01

SG 60 M
ID 317436-02

SG 101 V[1)]
For the MT 101 M in vertical operation
ID 361140-01

SG 101 H[1)]
For the MT 101 M in horizontal operation
ID 361140-02

Connector (female), 3-pin
For external operation of the switch box
ID 340646-05

[1)] Separate power adapter required

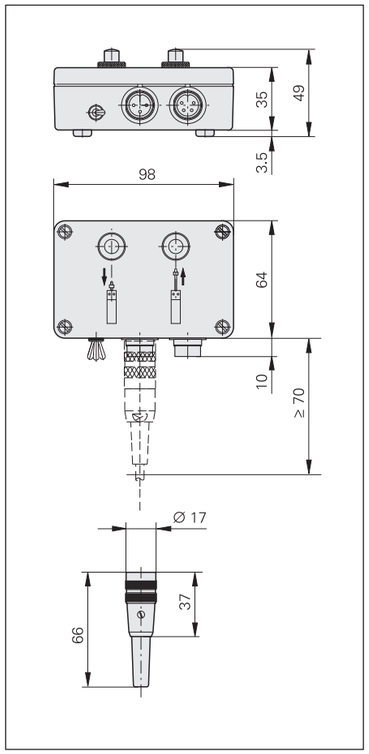

Power adapter for SG 101 V/H
An adapter connected to the switch box powers the MT 101 M.

Voltage range: AC 100 V to 240 V
Exchangeable plug adapter
(European and U.S. connectors included in delivery)

ID 312426-13

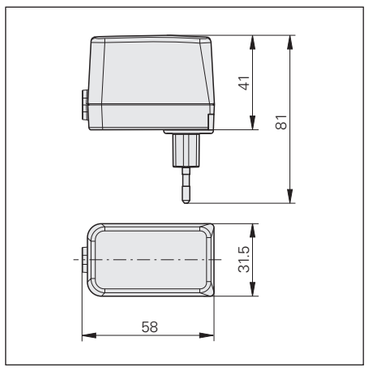

Coupling
For connecting the plunger of the length gauge (specifically for the MT 60 K, MT 101 K, CT 2502, and CT 6002) to a moving machine element

ID 206310-01

mm
Tolerancing ISO 8015
ISO 2768 - m H
≤ 6 mm: ±0.2 mm

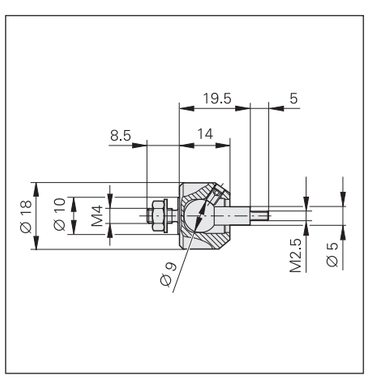

Accessories for HEIDENHAIN-CERTO
Gauge stand

CS 200 gauge stand
For length gauges CT 2501*
CT 6001

ID 221310-01

Overall height	350 mm
Measuring table	Ø 250 mm
Column	Ø 58 mm
Mass	15 kg

* With special holder

The flatness of the CS 200 is determined with the aid of a Fizeau interferometer.

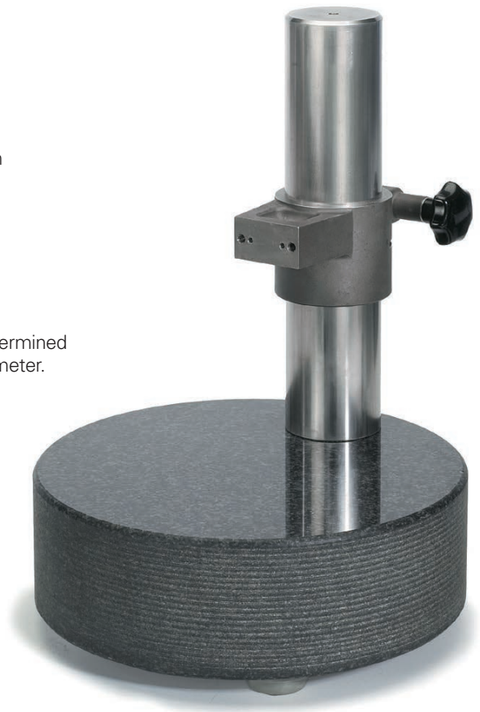

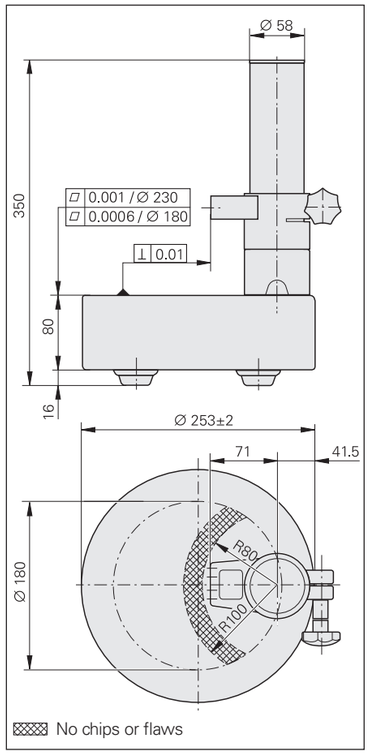

Holder for CS 200
For the CT 2501 with Ø 16 mm clamping shank

ID 324391-01

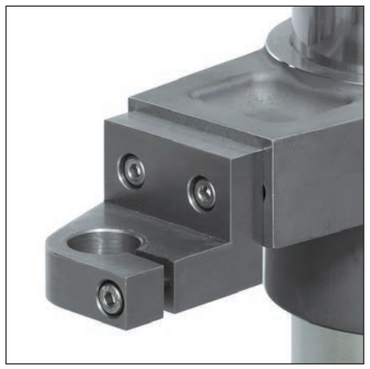

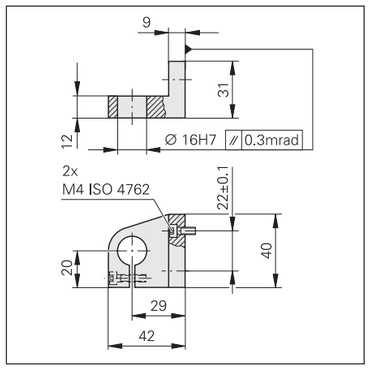

mm
Tolerancing ISO 8015
ISO 2768 - m H
≤ 6 mm: ±0.2 mm

Ceramic suction plate, diaphragm pump

Ceramic suction plate
Wear-resistant working surface with high surface quality specifically for inspecting gauge blocks

ID 223100-01

The gauge block (class 1 or 2)—or any other object with a plane surface—is drawn by suction onto the top of the ceramic plate. The ceramic plate is likewise drawn to the granite base and held in place through negative pressure.

Parts for connecting the ceramic suction plate with the diaphragm pump are among the items supplied:

Pressure tubing: 3 m
T-joint
Connecting piece

Diaphragm pump
Source of suction for drawing the measured object and ceramic suction plate

Power consumption	20 W
Mass	2.3 kg
Line voltage	AC 230 V / 50 Hz
ID 754220-01	
Line voltage	AC 115 V / 60 Hz
ID 754220-02	

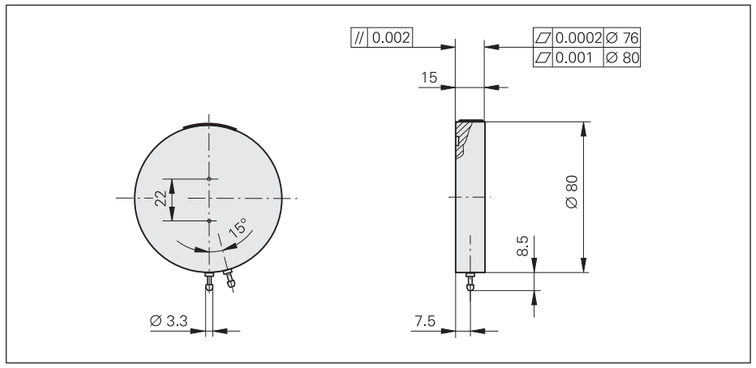

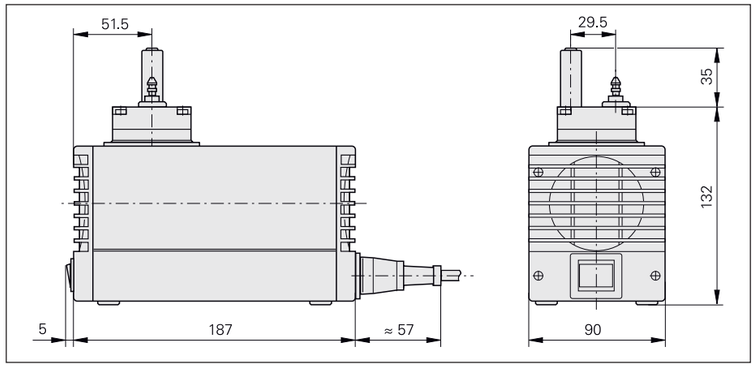

mm
Tolerancing ISO 8015
ISO 2768 - m H
≤ 6 mm: ±0.2 mm

Accessories for HEIDENHAIN-ACANTO, HEIDENHAIN-METRO, and HEIDENHAIN-SPECTO
Cable release and gauge stands

Cable release
For manual plunger actuation on the MT 1200 and MT 2500. Built-in pneumatic damping reduces the plunger extension speed to prevent bouncing (e.g., on very hard materials).

ID 257790-01

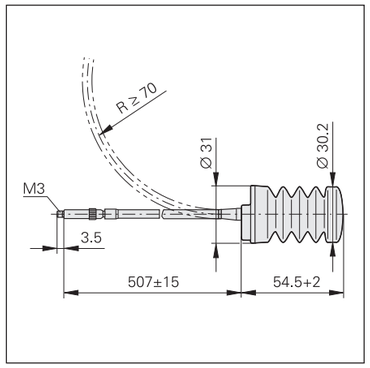

MS 200 gauge stand

For length gauges	AT[1)] ST[1)] MT 1200[1)] MT 2500[1)] MT 60 M MT 101 M

ID 244154-01

Total height	346 mm
Base	Ø 250 mm
Column	Ø 58 mm
Mass	18 kg

[1)] With special holder

Holder for the MS 200
For mounting the length gauge with a clamping shaft (Ø 8 mm), including the AT, ST, MT 1200, and MT 2500

ID 324391-02

mm
Tolerancing ISO 8015
ISO 2768 - m H
≤ 6 mm: ±0.2 mm

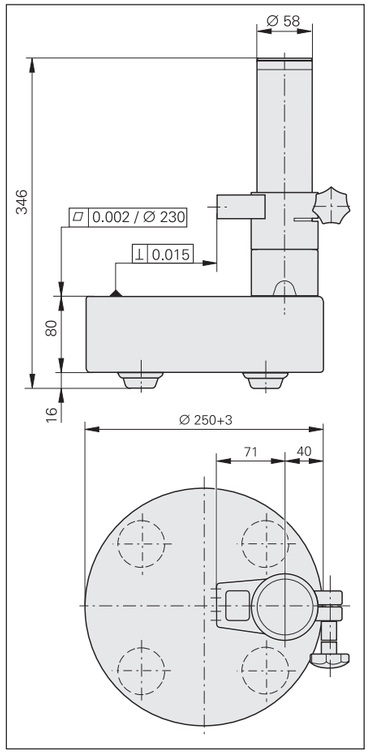

Clamping sleeve and clamping bush
For all length gauges with a Ø 8 mm clamping shaft, including the AT, ST, MT 1200, and MT 2500, for secure attachment of the length gauge without overburdening the 8h6 clamping shank:

Clamping sleeve with screw
ID 386811-01 (qty. 1)
ID 386811-02 (qty. 10)

Clamping bush with screw
ID 1177968-02
Additional protection from damage to the ball guide, as well as a wide tolerance range for the tightening torque

Clamping bush with screw
(ID 1177968-02)

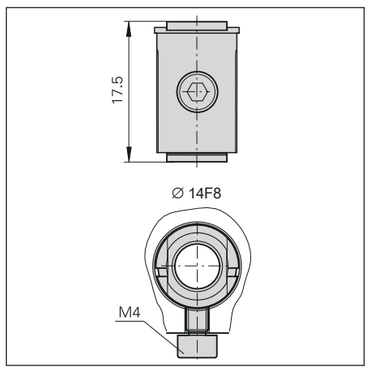

MS 45 gauge stand

For length gauges	AT ST MT 1200 MT 2500

ID 202162-02

Overall height	196.5 mm
Measuring table	Ø 49 mm
Column	Ø 22 mm
Mass	2.2 kg

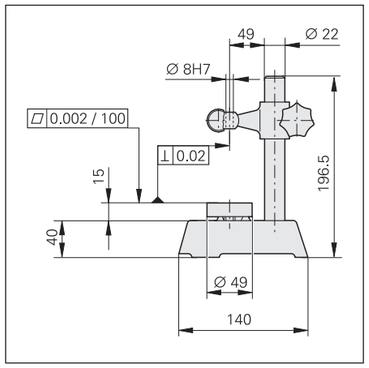

MS 100 gauge stand

For length gauges	AT ST MT 1200 MT 2500 MT 60 M[1)] MT 101 M[1)]

ID 202164-02

Overall height	385 mm
Measuring table	98 mm x 115 mm
Column	Ø 50 mm
Mass	18 kg

[1)] With special holder

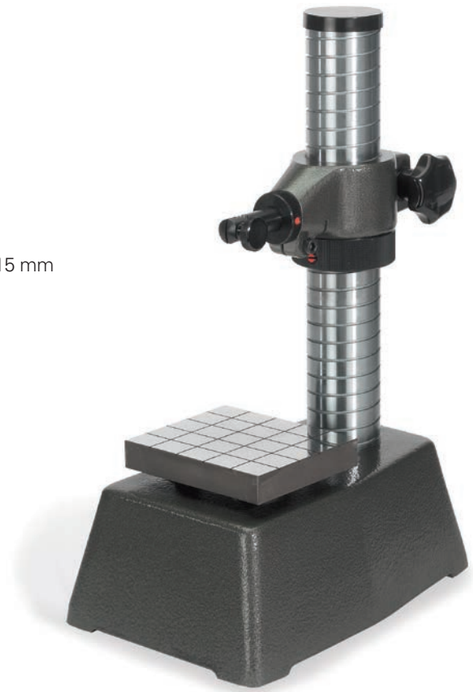

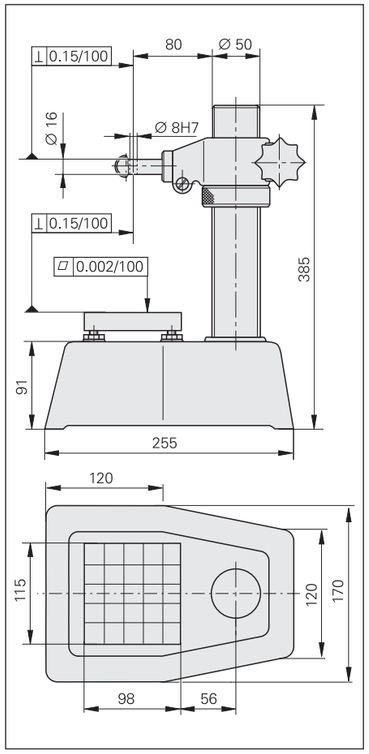

Holder for MS 100

For mounting the MT 60 M
ID 207479-01

For mounting the MT 101 M
ID 206260-01

mm
Tolerancing ISO 8015
ISO 2768 - m H
≤ 6 mm: ±0.2 mm

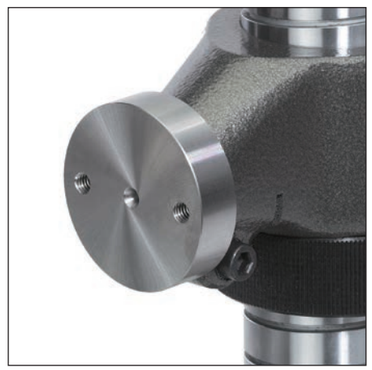

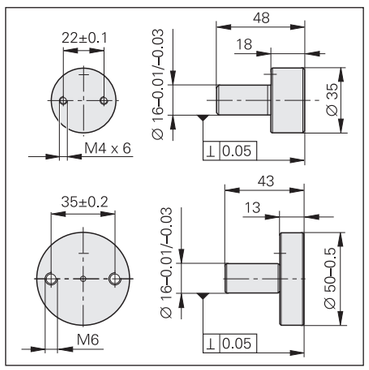

Signal converters

The signal converters from HEIDENHAIN adapt the encoder signals to the interface of the subsequent electronics. They are used when the subsequent electronics cannot directly process the output signals from HEIDENHAIN encoders or when additional interpolation of the signals is necessary.

Input signals of the interface electronics
HEIDENHAIN signal converters can be connected to encoders with 1 V_{PP} sinusoidal signals (voltage signals) or 11 μA_{PP} sinusoidal signals (current signals). Encoders with the EnDat or SSI serial interface can be connected to various signal converters as well.

Output signals of the signal converters
The signal converters are available with the following interface to the subsequent electronics.
- TTL square-wave pulse trains
- EnDat 2.2
- DRIVE-CLiQ
- Fanuc Serial Interface
- Mitsubishi high speed interface
- Yaskawa Serial Interface
- Profibus
- Profinet

Interpolation of the sinusoidal input signals
In addition to performing signal conversion, the signal converters also interpolate the sinusoidal encoder signals. This permits finer measuring steps, resulting in higher control quality and superior positioning behavior.

Generation of a position value
Various signal converters feature an integrated counter function. Starting from the last set reference point, an absolute position value is generated and output to the subsequent electronics when the reference mark is crossed.

Box design

Plug design

Version for integration

Top-hat rail design

Outputs		Inputs		Design – Protection class	Interpolation[1] or subdivision	Model
Interface	Qty.	Interface	Qty.			
⊓⊔TTL	1	∼ 1 V_{PP}	1	Box design – IP65	5/10-fold	**IBV 101**
					20/25/50/100-fold	**IBV 102**
					Without interpolation	**IBV 600**
					25/50/100/200/400-fold	**IBV 660 B**
				Plug design – IP40	5/10/20/25/50/100-fold	**APE 371**
				Version for integration – IP00	5/10-fold	**IDP 181**
					20/25/50/100-fold	**IDP 182**
		∼ 11 μA_{PP}	1	Box design – IP65	5/10-fold	**EXE 101**
					20/25/50/100-fold	**EXE 102**
				Version for integration – IP00	5-fold	**IDP 101**
⊓⊔TTL/ ∼ 1 V_{PP} Adjustable	2	∼ 1 V_{PP}	1	Box design – IP65	2-fold	**IBV 6072**
					5/10-fold	**IBV 6172**
					5/10-fold and 20/25/50/100-fold	**IBV 6272**
EnDat 2.2	1	∼ 1 V_{PP}	1	Box design – IP65	≤ 16384-fold subdivision	**EIB 192**
				Plug design – IP40	≤ 16384-fold subdivision	**EIB 392**
			2	Box design – IP65	≤ 16384-fold subdivision	**EIB 1512**
DRIVE-CLiQ	1	EnDat 2.2	1	Box design – IP65	–	**EIB 2391 S**
Fanuc Serial Interface	1	∼ 1 V_{PP}	1	Box design – IP65	≤ 16384-fold subdivision	**EIB 192 F**
				Plug design – IP40	≤ 16384-fold subdivision	**EIB 392 F**
			2	Box design – IP65	≤ 16384-fold subdivision	**EIB 1592 F**
Mitsubishi high speed interface	1	∼ 1 V_{PP}	1	Box design – IP65	≤ 16384-fold subdivision	**EIB 192 M**
				Plug design – IP40	≤ 16384-fold subdivision	**EIB 392 M**
			2	Box design – IP65	≤ 16384-fold subdivision	**EIB 1592 M**
Yaskawa Serial Interface	1	EnDat 2.2[2]	1	Plug design – IP40	–	**EIB 3391 Y**
PROFIBUS-DP	1	EnDat 2.1; EnDat 2.2	1	Top-hat rail design	–	**PROFIBUS Gateway**

[1] Switchable

[2] Only LIC 4100, measuring step 5 nm; LIC 2100, measuring step 50 nm and 100 nm

Calibration according to DAkkS

The ISO 9001 quality management standard requires quality-relevant inspection equipment to be regularly monitored and traceable to a national standard in concordance with the International System of Units (SI). HEIDENHAIN supports its customers in this with its own calibration lab for digital linear and angle encoders, which has been accredited since 1994.

The **HEIDENHAIN calibration lab** operates in accordance with DIN EN ISO/IEC 17025 and is accredited by the German Accreditation Body (DAkkS). **HEIDENHAIN calibration certificates** granted by the accredited lab document traceability to the International System of Units (SI).

The DAkkS is a signatory to the multilateral agreement of the European co-operation for Accreditation (EA) and to the International Laboratory Accreditation Cooperation (ILAC) for the mutual recognition of calibration certificates. Calibration certificates from HEIDENHAIN are recognized in most industrialized countries.

The calibration certificate from HEIDENHAIN gives the user certainty about the accuracy of the encoder, and also certifies the traceability to the International System of Units (SI) required for ISO 9001.

The calibration lab at HEIDENHAIN is equipped for all **digital linear and angle measuring systems** requiring high accuracy:
- AT, CT, MT, and ST length gauges (including in conjunction with ND 28x, EXE, or IBV subsequent electronics)
- LC, LF, LIDA, LIP, and LS linear encoders
- ECN, ROC, ROD, and RON angle encoders

Length gauges from HEIDENHAIN can be calibrated regardless of their interface. If the measuring chain includes subsequent electronics from HEIDENHAIN, then they can be included in the calibration as well.

The following information can be measured and certified:
- Error span for plunger retraction
- Error span for a part of the measuring span
- Repeatability with five measurements (extended plunger)

DAkkS
Deutsche Akkreditierungsstelle
D-K-19057-01-00

Excerpt from a sample calibration certificate

HEIDENHAIN

DR. JOHANNES HEIDENHAIN GmbH
Dr.-Johannes-Heidenhain-Straße 5
83301 Traunreut, Germany
Tel +49 8669 31-1157
FAX +49 8669 32-1157
E-mail: metz@heidenhain.de

akkreditiert durch die / *accredited by the*
Deutsche Akkreditierungsstelle GmbH
als Kalibrierlaboratorium im / *as calibration laboratory in the*
Deutschen Kalibrierdienst DKD

Kalibrierschein / *Calibration certificate*

Kalibrierzeichen / *Calibration mark*: 000000 / D-K-19057-01-00 / 2013-02

Gegenstand / *Object*	Inkrementales Längenmessgerät
Hersteller / *Manufacturer*	HEIDENHAIN
Typ / *Type*	MT 2581
Fabrikat/Serien-Nr. / *Serial number*	8547396A
Auftraggeber / *Customer*	DR. JOHANNES HEIDENHAIN GmbH Dr.-Johannes-Heidenhain-Straße 5 83301 Traunreut
Auftragsnummer / *Order No.*	Intern
Anzahl der Seiten des Kalibrierscheines / *Number of pages of the certificate*	4
Datum der Kalibrierung / *Date of calibration*	2013-02-20

Dieser Kalibrierschein dokumentiert die Rückführung auf nationale Normale zur Darstellung der Einheiten in Übereinstimmung mit dem Internationalen Einheitensystem (SI).
Die DAkkS ist Unterzeichner der multilateralen Übereinkommen der European co-operation for Accreditation (EA) und der International Laboratory Accreditation Cooperation (ILAC) zur gegenseitigen Anerkennung der Kalibrierscheine.
Für die Einhaltung einer angemessenen Frist zur Wiederholung der Kalibrierung ist der Benutzer verantwortlich.
This calibration certificate documents the traceability to notional standards, which realize the units of measurement according to the International System of Units (SI).
The DAkkS is signatory to the multilateral agreements of the European co-operation for Accreditation (EA) and of the International Laboratory Accreditation Cooperation (ILAC) for the mutual recognition of calibration certificates.
The user is obliged to have the object recalibrated at appropriate intervals.

Dieser Kalibrierschein darf nur vollständig und unverändert weiterverbreitet werden. Auszüge oder Änderungen bedürfen der Genehmigung sowohl der Deutschen Akkreditierungsstelle GmbH als auch des ausstellenden Kalibrierlaboratoriums. Kalibrierscheine ohne Unterschrift haben keine Gültigkeit.
This calibration certificate may not be reproduced other than in full except with the permission of both the Deutsche Akkreditierungsstelle GmbH and the issuing laboratory. Calibration certificates without signature are not valid.

Datum / *Date*	Leiter des Kalibrierlaboratoriums / *Head of the calibration laboratory*	Bearbeiter / *Person in charge*
2013-02-20	Gerald Metz	Gerald Metz

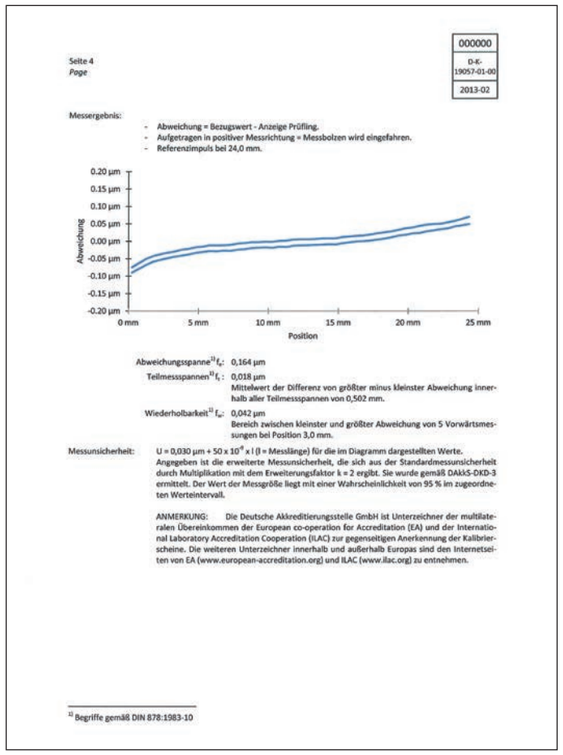

Seite 4 / *Page*

000000 / D-K-19057-01-00 / 2013-02

Messergebnis:
- Abweichung = Bezugswert - Anzeige Prüfling.
- Aufgetragen in positiver Messrichtung = Messbolzen wird eingefahren.
- Referenzimpuls bei 24,0 mm.

Abweichungsspanne[1] f_E: 0,164 µm
Teilmessspannen[1] f_t: 0,018 µm
Mittelwert der Differenz von größter minus kleinster Abweichung innerhalb aller Teilmessspannen von 0,502 mm.
Wiederholbarkeit[1] f_w: 0,042 µm
Bereich zwischen kleinster und größter Abweichung von 5 Vorwärtsmessungen bei Position 3,0 mm.

Messunsicherheit: U = 0,030 µm + 50 x 10^{-9} x l (l = Messlänge) für die im Diagramm dargestellten Werte.
Angegeben ist die erweiterte Messunsicherheit, die sich aus der Standardmessunsicherheit durch Multiplikation mit dem Erweiterungsfaktor k = 2 ergibt. Sie wurde gemäß DAkkS-DKD-3 ermittelt. Der Wert der Messgröße liegt mit einer Wahrscheinlichkeit von 95 % im zugeordneten Werteintervall.

ANMERKUNG: Die Deutsche Akkreditierungsstelle GmbH ist Unterzeichner der multilateralen Übereinkommen der European co-operation for Accreditation (EA) und der International Laboratory Accreditation Cooperation (ILAC) zur gegenseitigen Anerkennung der Kalibrierscheine. Die weiteren Unterzeichner innerhalb und außerhalb Europas sind den Internetseiten von EA (www.european-accreditation.org) und ILAC (www.ilac.org) zu entnehmen.

[1] Begriffe gemäß DIN 878:1983-10

Related documents

Related to length gauges

Brochure
Cables and Connectors

Contents:
Technical characteristics, cable overviews, and cable lists

Brochure
Interfaces of HEIDENHAIN Encoders

Contents:
Information on serial interfaces, sinusoidal signals, square-wave signals, and commutation signals

Brochure
Evaluation Electronics
For Metrology Applications

Contents:
ND, GAGE-CHEK, EIB, IK

Brochure
Digital Readouts/Linear Encoders
For Manually Operated Machine Tools

Contents:
Digital readouts
ND, POSITIP
Linear encoders
LS

Further HEIDENHAIN products

Brochures
TNC 128 Straight-Cut Control
TNC 320 Contouring Control
iTNC 530 Contouring Control
TNC 620 Contouring Control
TNC 640 Contouring Control

Contents:
Information for the user

Brochures
MANUALplus 620 Contouring Control
CNC PILOT 640 Contouring Control

Contents:
Information for the user

Brochure
Encoders for Servo Drives

Contents:
Rotary encoders
Angle encoders
Linear encoders

Brochure
Angle Encoders with Integral Bearing

Contents:
Absolute angle encoders
RCN, ECN
Incremental angle encoders
RON, RPN, ROD

Brochure
Angle Encoder Modules

Contents:
Angle encoder modules
MRP2000, MRP5000, MRP8000
Angle encoder modules with integrated torque motor **SRP5000, AccurET**

Brochure
Modular Angle Encoders
with Optical Scanning

Contents:
Incremental angle encoders
ERP, ERO, ERA

Brochure
Touch Probes

Contents:
Tool touch probes
TT
Workpiece touch probes
TS

Brochure
Measuring Devices For Machine Tool Inspection and Acceptance Testing

Contents:
Incremental linear encoders
KGM, VM

HEIDENHAIN

DR. JOHANNES HEIDENHAIN GmbH
Dr.-Johannes-Heidenhain-Straße 5
83301 Traunreut, Germany
☏ +49 8669 31-0
FAX +49 8669 32-5061
E-mail: info@heidenhain.de

www.heidenhain.de

Vollständige und weitere Adressen siehe www.heidenhain.de
For complete and further addresses see www.heidenhain.de

DE **HEIDENHAIN Vertrieb Deutschland**
83301 Traunreut, Deutschland
☏ 08669 31-3132
FAX 08669 32-3132
E-Mail: hd@heidenhain.de

HEIDENHAIN Technisches Büro Nord
12681 Berlin, Deutschland
☏ 030 54705-240

HEIDENHAIN Technisches Büro Mitte
07751 Jena, Deutschland
☏ 03641 4728-250

HEIDENHAIN Technisches Büro West
44379 Dortmund, Deutschland
☏ 0231 618083-0

HEIDENHAIN Technisches Büro Südwest
70771 Leinfelden-Echterdingen, Deutschland
☏ 0711 993395-0

HEIDENHAIN Technisches Büro Südost
83301 Traunreut, Deutschland
☏ 08669 31-1337

AR **NAKASE SRL.**
B1653AOX Villa Ballester, Argentina
www.heidenhain.com.ar

AT **HEIDENHAIN Techn. Büro Österreich**
83301 Traunreut, Germany
www.heidenhain.de

AU **FCR MOTION TECHNOLOGY PTY LTD**
Laverton North Victoria 3026, Australia
E-mail: sales@fcrmotion.com

BE **HEIDENHAIN NV**
1760 Roosdaal, Belgium
www.heidenhain.be

BG **ESD Bulgaria Ltd.**
Sofia 1172, Bulgaria
www.esd.bg

BR **HEIDENHAIN Brasil Ltda.**
04763-070 – São Paulo – SP, Brazil
www.heidenhain.com.br

BY **GERTNER Service**
220026 Minsk, Belarus
www.heidenhain.by

CA **HEIDENHAIN CORPORATION**
Mississauga, OntarioL5T2N2, Canada
www.heidenhain.com

CH **HEIDENHAIN (SCHWEIZ) AG**
8603 Schwerzenbach, Switzerland
www.heidenhain.ch

CN **DR. JOHANNES HEIDENHAIN (CHINA) Co., Ltd.**
Beijing 101312, China
www.heidenhain.com.cn

CZ **HEIDENHAIN s.r.o.**
102 00 Praha 10, Czech Republic
www.heidenhain.cz

DK Denmark → **SE**

ES **FARRESA ELECTRONICA S.A.**
08028 Barcelona, Spain
www.farresa.es

FI **HEIDENHAIN Scandinavia AB**
01740 Vantaa, Finland
www.heidenhain.fi

FR **HEIDENHAIN FRANCE sarl**
92310 Sèvres, France
www.heidenhain.fr

GB **HEIDENHAIN (G.B.) Limited**
Burgess Hill RH15 9RD, United Kingdom
www.heidenhain.co.uk

GR **MB Milionis Vassilis**
17341 Athens, Greece
www.heidenhain.gr

HR Croatia → **SL**

HU **HEIDENHAIN Kereskedelmi Képviselet**
1239 Budapest, Hungary
www.heidenhain.hu

ID **PT Servitama Era Toolsindo**
Jakarta 13930, Indonesia
E-mail: ptset@group.gts.co.id

IL **NEUMO VARGUS MARKETING LTD.**
Holon, 5885948, Israel
E-mail: neumo@neumo-vargus.co.il

IN **HEIDENHAIN Optics & Electronics India Private Limited**
Chetpet, Chennai 600 031, India
www.heidenhain.in

IT **HEIDENHAIN ITALIANA S.r.l.**
20128 Milano, Italy
www.heidenhain.it

JP **HEIDENHAIN K.K.**
Tokyo 102-0083, Japan
www.heidenhain.co.jp

KR **HEIDENHAIN Korea Ltd.**
Anyang-si, Gyeonggi-do, 14087
South Korea
www.heidenhain.co.kr

MX **HEIDENHAIN CORPORATION MEXICO**
20290 Aguascalientes, AGS., Mexico
E-mail: info@heidenhain.com

MY **ISOSERVE SDN. BHD.**
43200 Balakong, Selangor
E-mail: sales@isoserve.com.my

NL **HEIDENHAIN NEDERLAND B.V.**
6716 BM Ede, Netherlands
www.heidenhain.nl

NO **HEIDENHAIN Scandinavia AB**
7300 Orkanger, Norway
www.heidenhain.no

NZ **Llama ENGINEERING Ltd**
5012 Wellington, New Zealand
E-mail: info@llamaengineering.co.nz

PH **MACHINEBANKS' CORPORATION**
Quezon City, Philippines 1113
E-mail: info@machinebanks.com

PL **APS**
02-384 Warszawa, Poland
www.heidenhain.pl

PT **FARRESA ELECTRÓNICA, LDA.**
4470 - 177 Maia, Portugal
www.farresa.pt

RO **HEIDENHAIN Reprezentanţă Romania**
Braşov, 500407, Romania
www.heidenhain.ro

RS Serbia → **BG**

RU **GERTNER Service**
119002 Moscow, Russian Federation
www.heidenhain.ru

SE **HEIDENHAIN Scandinavia AB**
12739 Skärholmen, Sweden
www.heidenhain.se

SG **HEIDENHAIN PACIFIC PTE LTD**
Singapore 408593
www.heidenhain.com.sg

SK **KOPRETINA TN s.r.o.**
91101 Trencin, Slovakia
www.kopretina.sk

SL **NAVO d.o.o.**
2000 Maribor, Slovenia
www.heidenhain.si

TH **HEIDENHAIN (THAILAND) LTD**
Bangkok 10250, Thailand
www.heidenhain.co.th

TR **T&M Mühendislik San. ve Tic. LTD. ŞTİ.**
34775 Y. Dudullu –
Ümraniye-Istanbul, Turkey
www.heidenhain.com.tr

TW **HEIDENHAIN CO., LTD.**
Taichung 40768, Taiwan
www.heidenhain.com.tw

UA **GERTNER Service**
02094 Kiev, Ukraine
www.heidenhain.ua

US **HEIDENHAIN CORPORATION**
Schaumburg, IL 60173-5337, USA
www.heidenhain.us

VN **AMS Co. Ltd**
HCM City, Vietnam
E-mail: davidgoh@amsvn.com

ZA **MAFEMA SALES SERVICES C.C.**
Kyalami 1684, South Africa
www.heidenhain.co.za

208945-2K · 5 · 05/2021 · H · Printed in Germany

AMI
Automation and Metrology
1-888-354-2525
auto-met.com